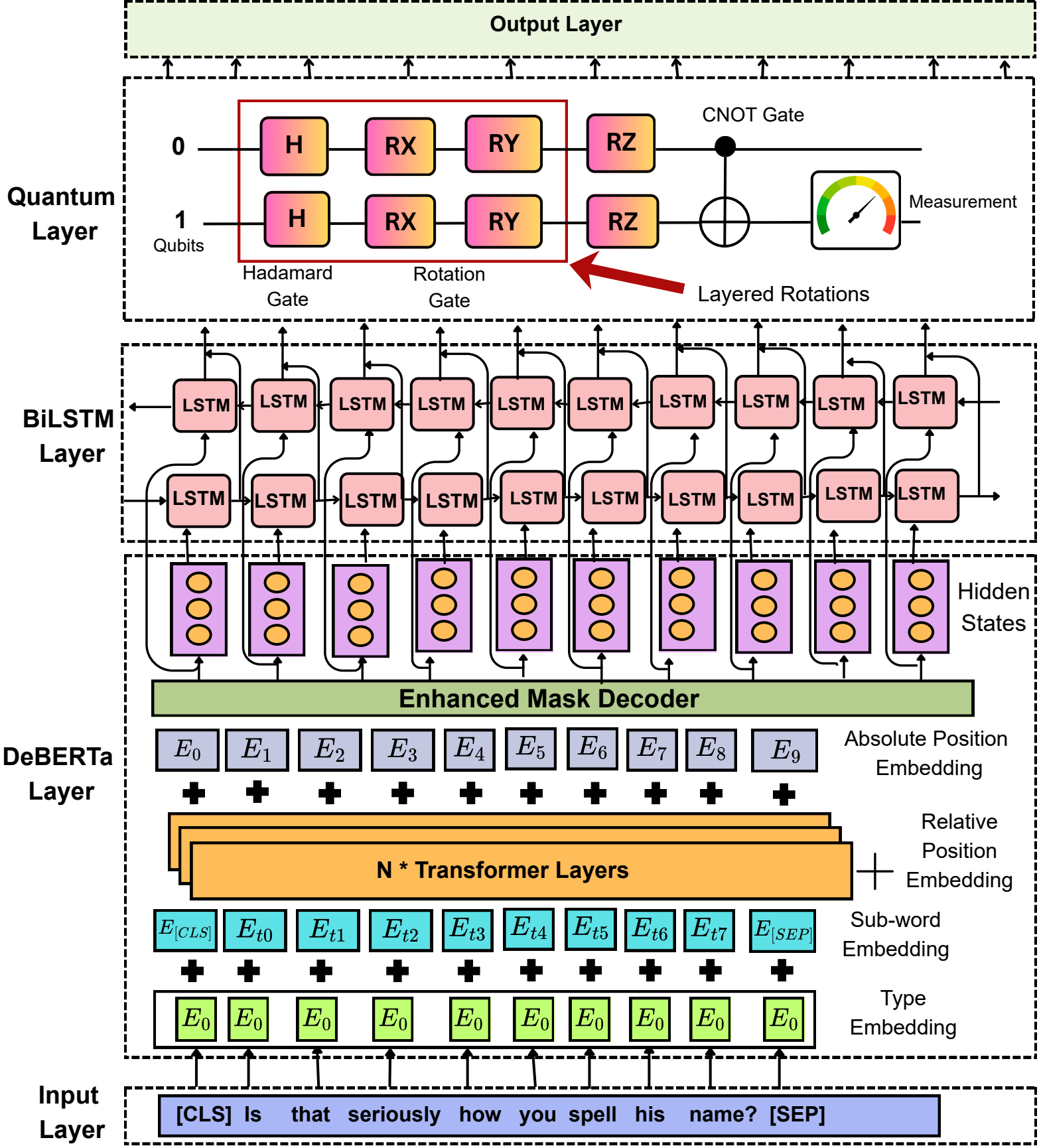
Output Layer
Quantum Layer
0
1
Qubits
H
RX
RY
RZ
CNOT Gate
Measurement
Hadamard Gate
Rotation Gate
Layered Rotations
BiLSTM Layer
LSTM
Hidden States
Enhanced Mask Decoder
DeBERTa Layer
E_0 E_1 E_2 E_3 E_4 E_5 E_6 E_7 E_8 E_9
Absolute Position Embedding
N * Transformer Layers
Relative Position Embedding
$E_{[CLS]}$ E_{t0} E_{t1} E_{t2} E_{t3} E_{t4} E_{t5} E_{t6} E_{t7} $E_{[SEP]}$
Sub-word Embedding
Type Embedding
Input Layer
[CLS] Is that seriously how you spell his name? [SEP]