POWER

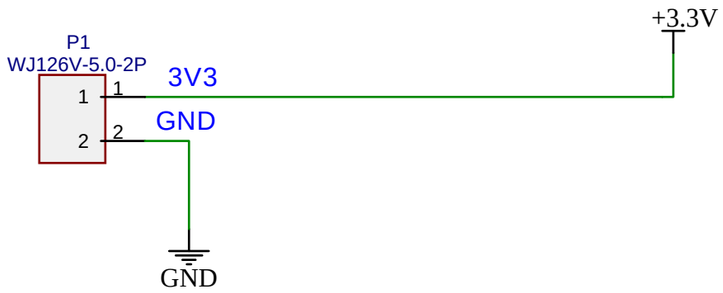

FLIGHT COMPUTER I2C LINES

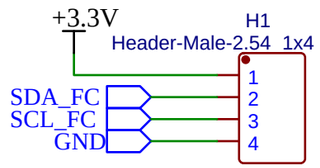

AVIONICS I2C LINES

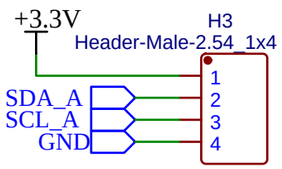

PROGRAMMING UART LINES

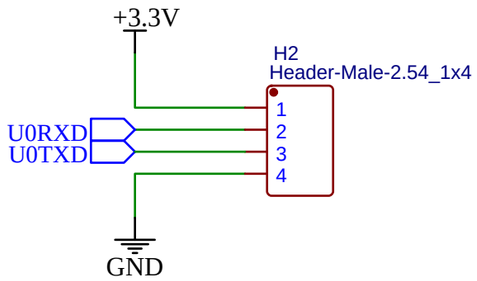

TITLE: Connectors		REV: 1.0
EasyEDA	Company: Nakuja	Sheet: 1/1
	Date: 2022-01-05 Drawn By: Osodo Rodney	

LORA MODULE

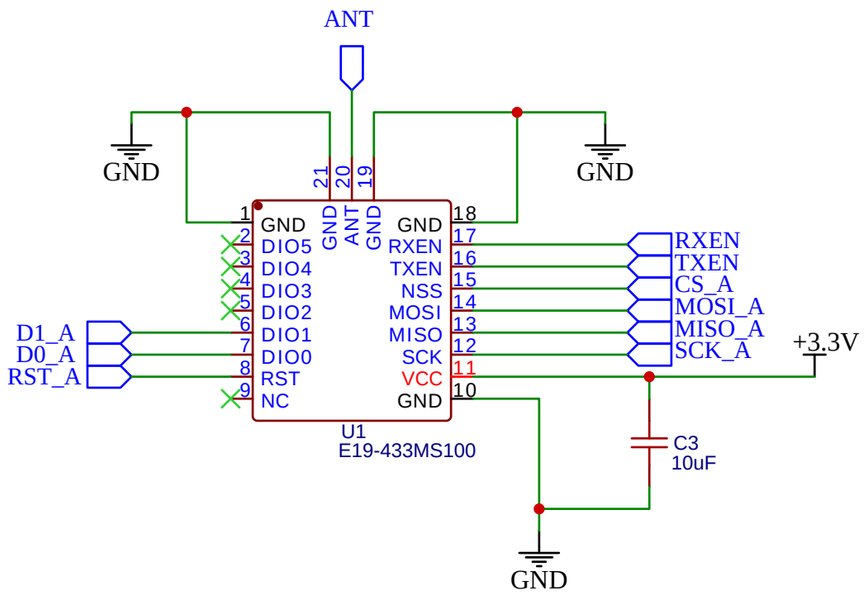

SD CARD

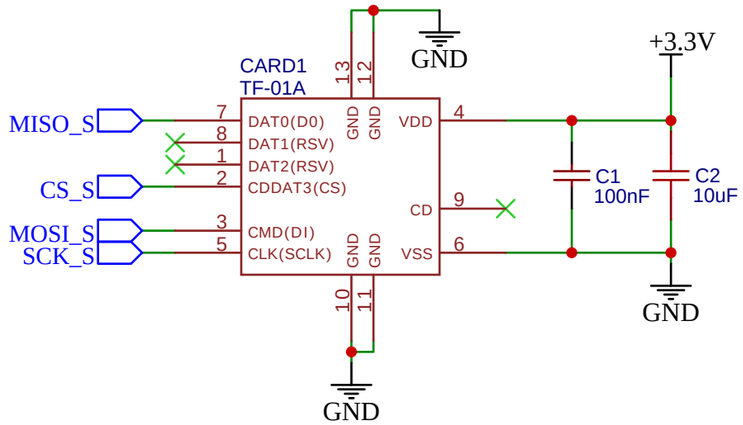

SD CARD PULL UPS

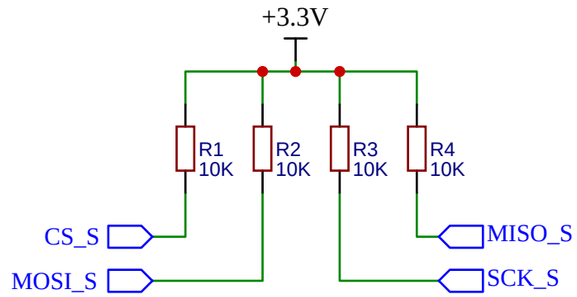

LORA ANTENNA

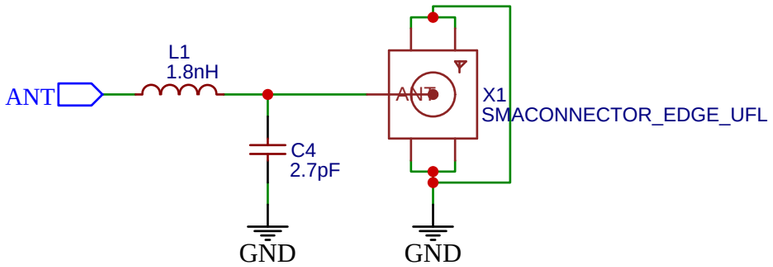

FLASH MEM

C190801

https://datasheet.lcsc.com/szlcsc/1912111437_MXIC-Macronix-MX25L6433FM2I-08G_C190801.pdf

TITLE: Lora and Storage		REV: 1.0
EasyEDA	Company: Nakuja	Sheet: 1/1
	Date: 2022-02-04 Drawn By: Rodney Osodo	

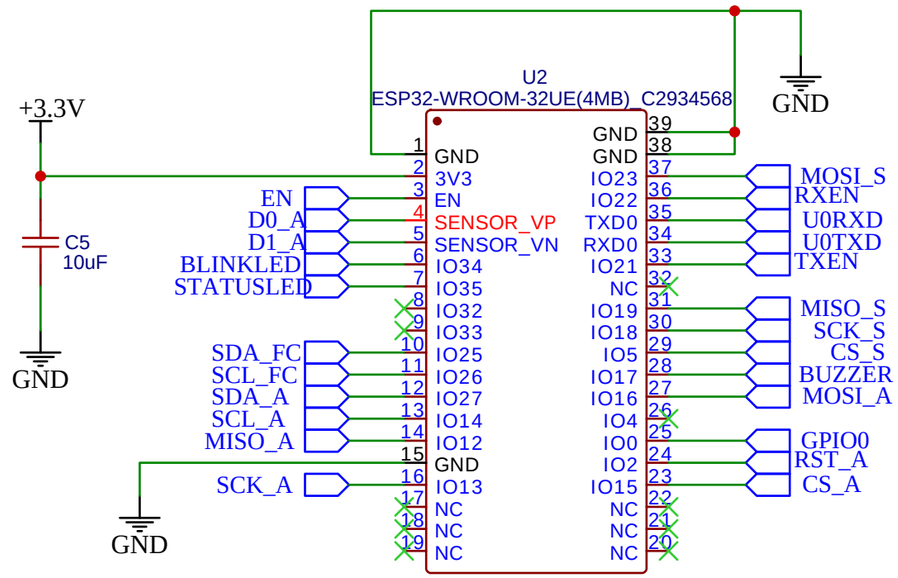

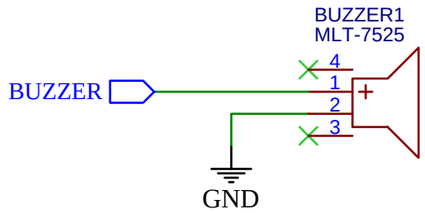

STATUS

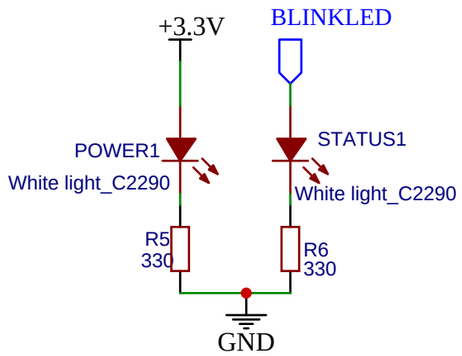

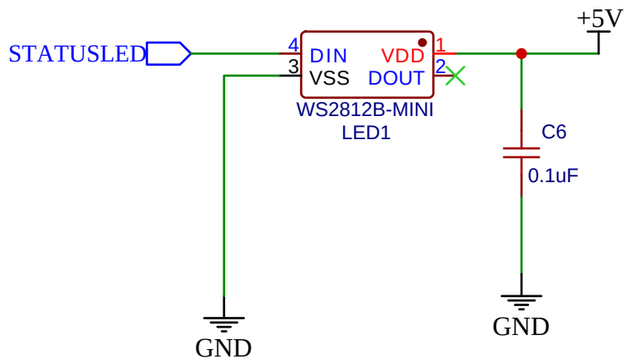

PROGRAMMING SWITCHES

RESET

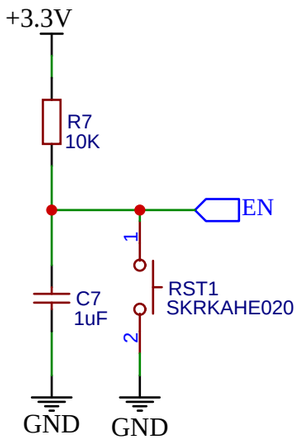

BOOT

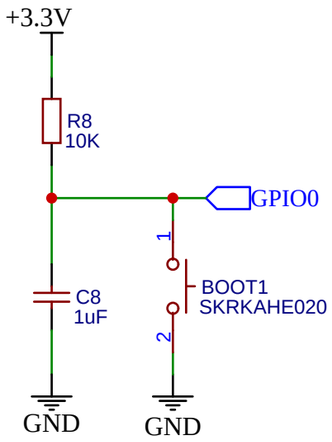

TITLE: MCU		REV: 1.0
EasyEDA	Company: Nakuja	Sheet: 1/1
	Date: 2022-02-04 Drawn By: Rodney Osodo	