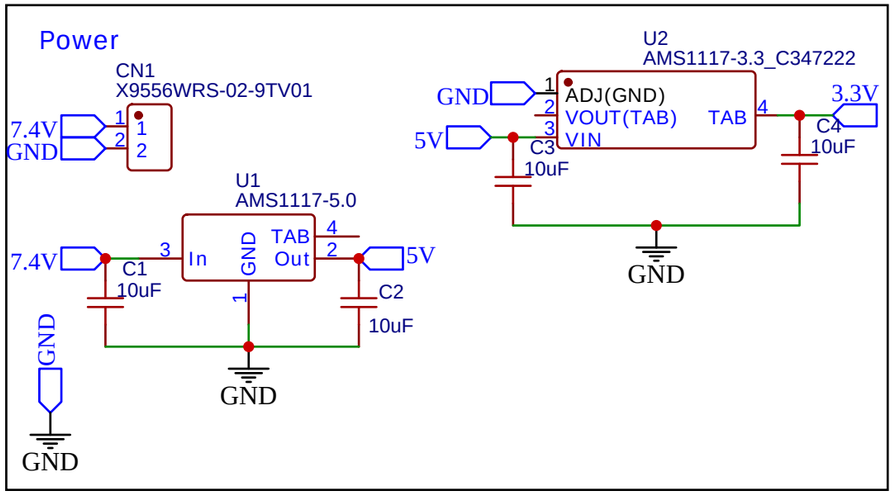

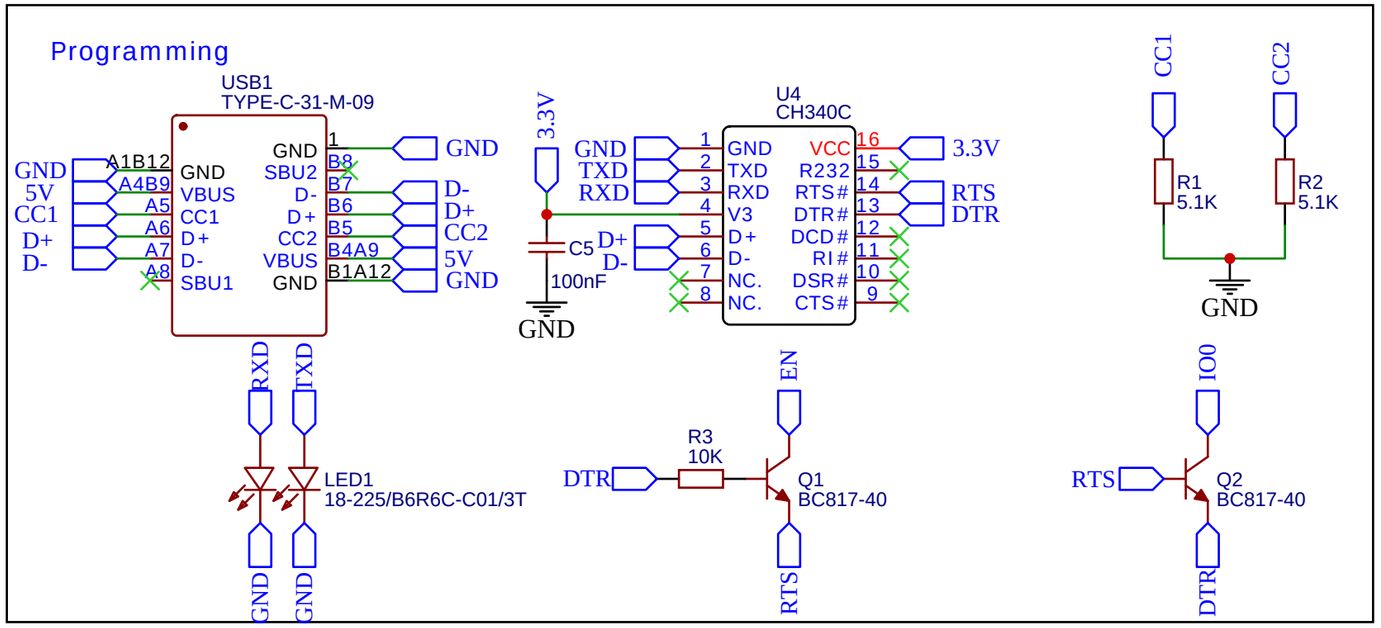

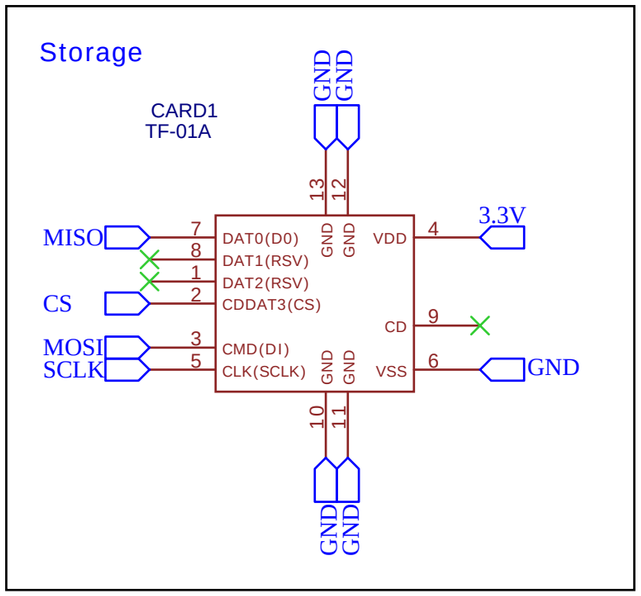

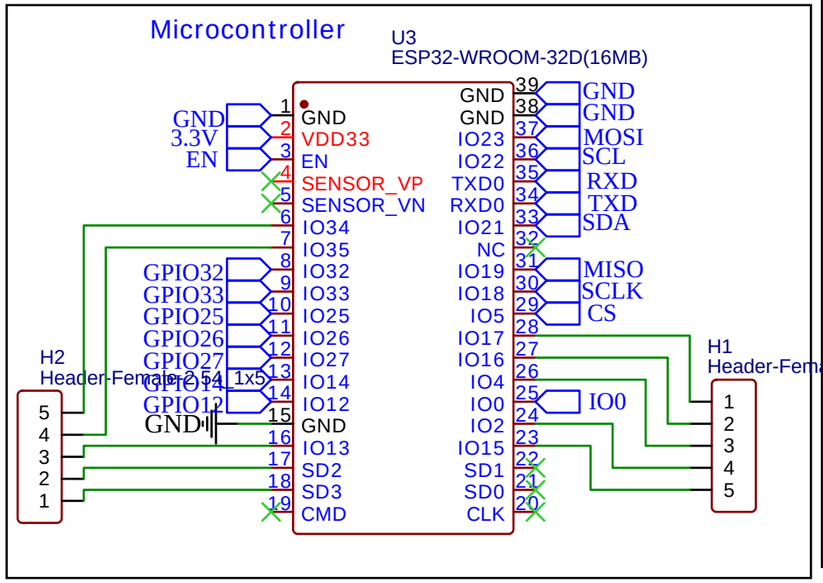

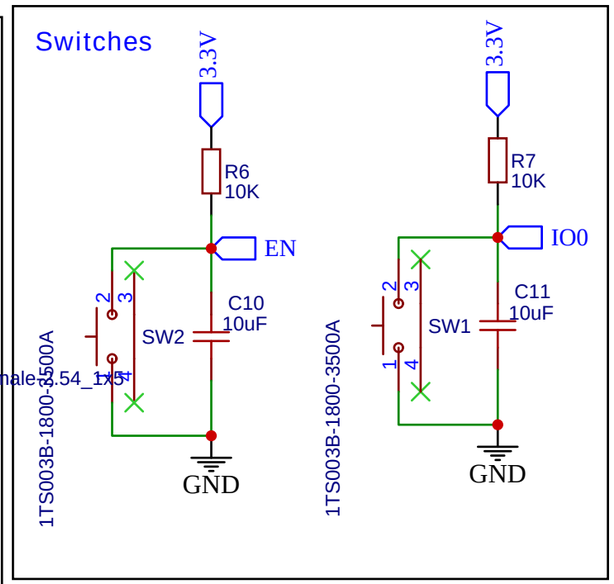

TITLE: Flight Control	REV: 1.0
Company: Nakuja project	Sheet: 1/1
Date: 2021-09-09 Drawn By: Michael Kimani	

EasyEDA

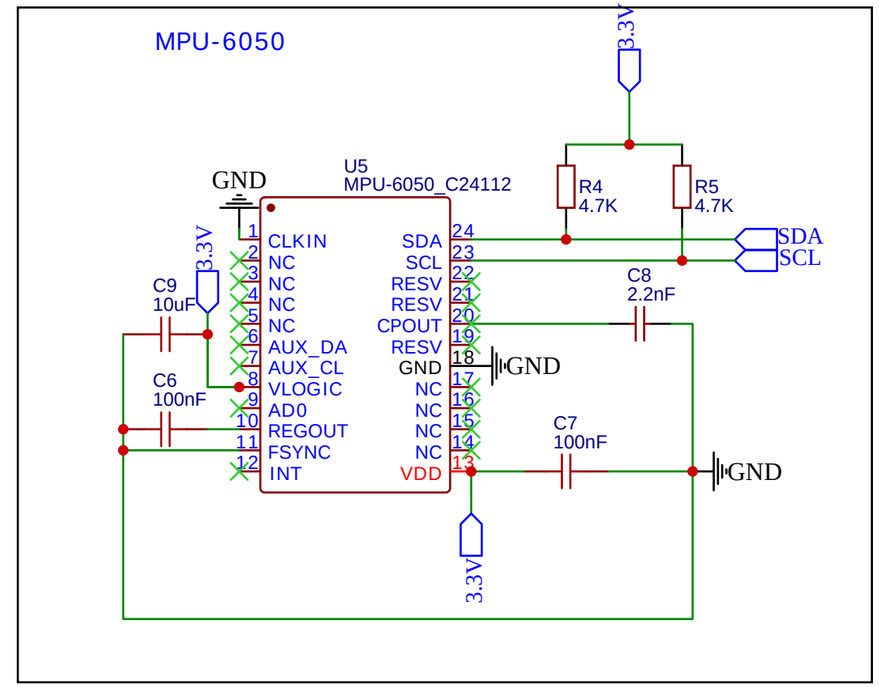

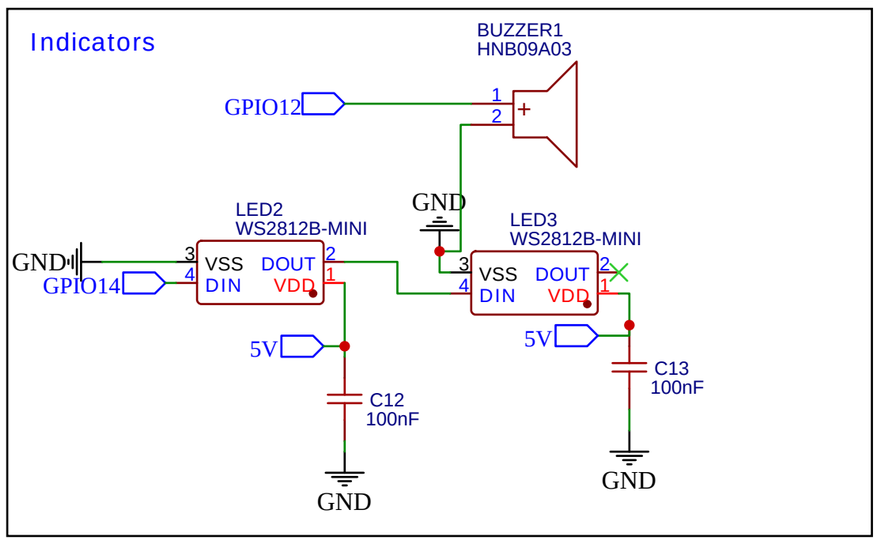

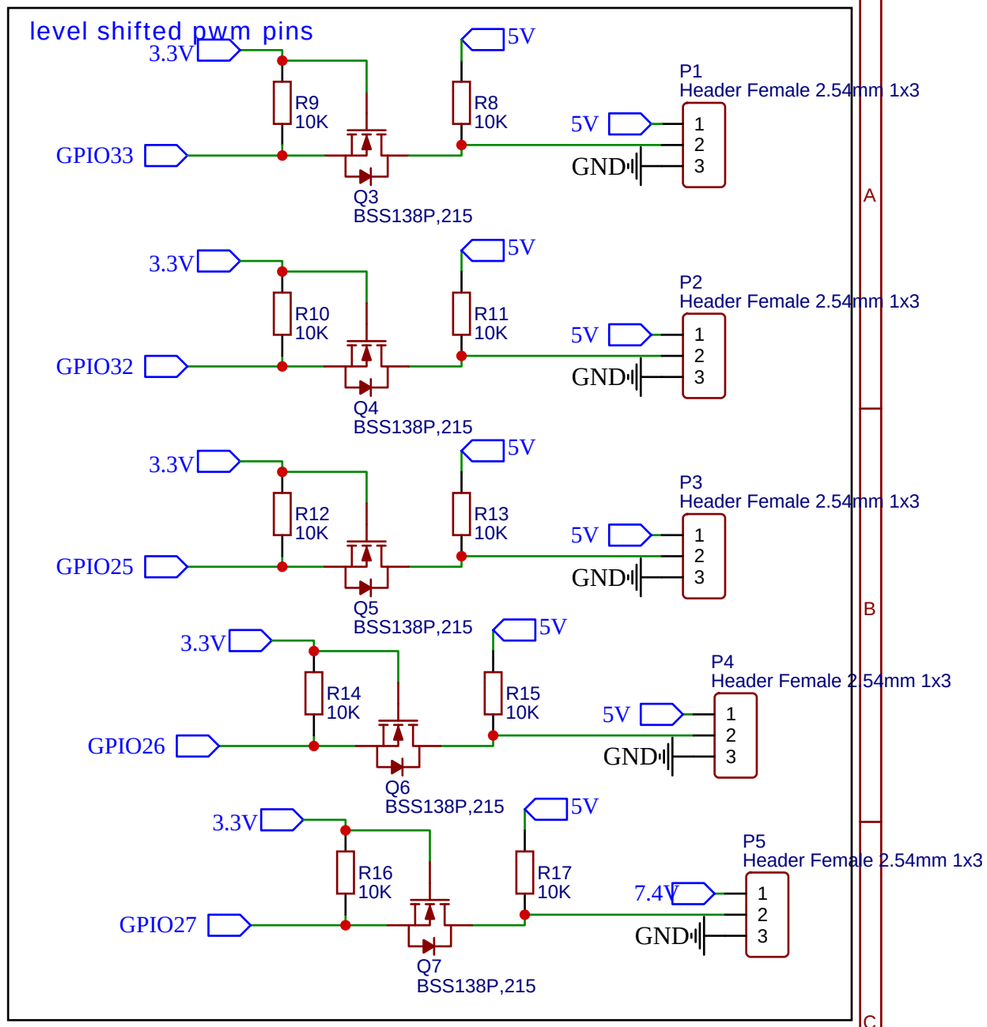

TITLE: Flight Control		REV: 1.0
EasyEDA	Company: Nakuja Project	Sheet: 1/1
	Date: 2021-10-03 Drawn By: Sammy Oina	