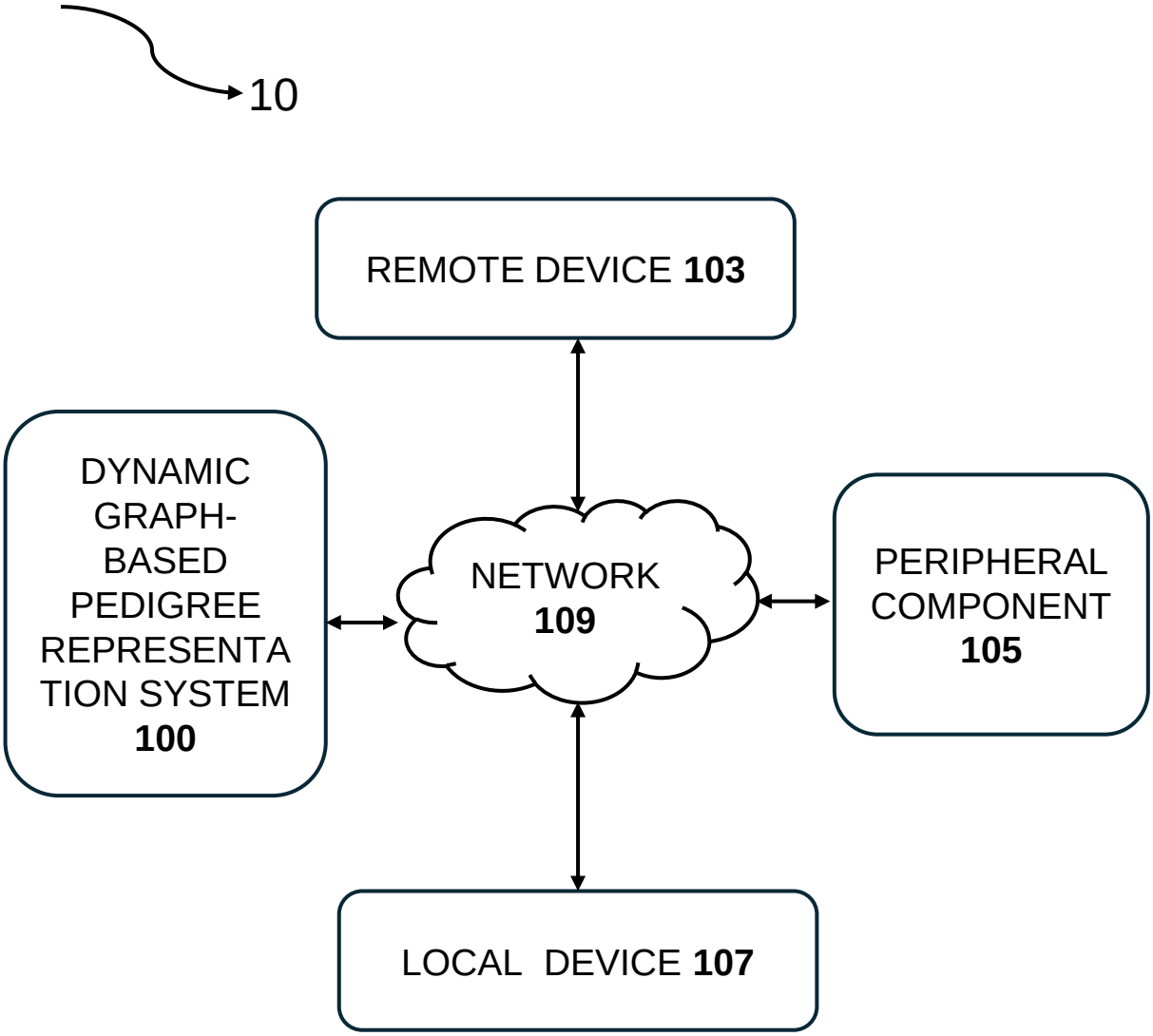

FIG.1

Pranav Bhat

Pranav Bhat (IN/PA 4580)

Agent for the Applicant

Signature Not

Digitally Signed.
Name: Pranav Bhat
Date: 24-Mar-2025
Reason: Patent Efili
Location: DELHI

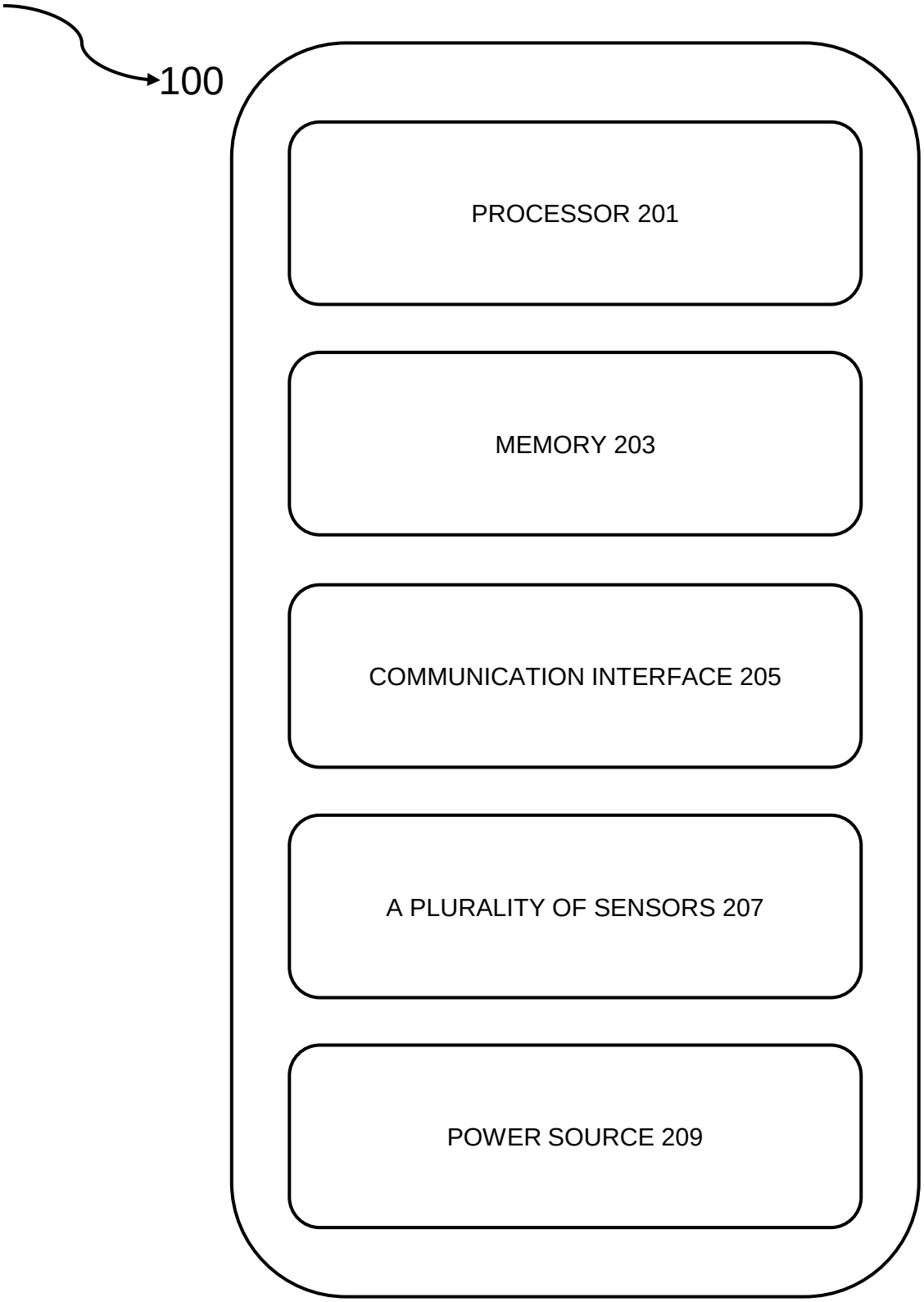

FIG.2

Pranav Bhat

Pranav Bhat (IN/PA 4580)
Agent for the Applicant

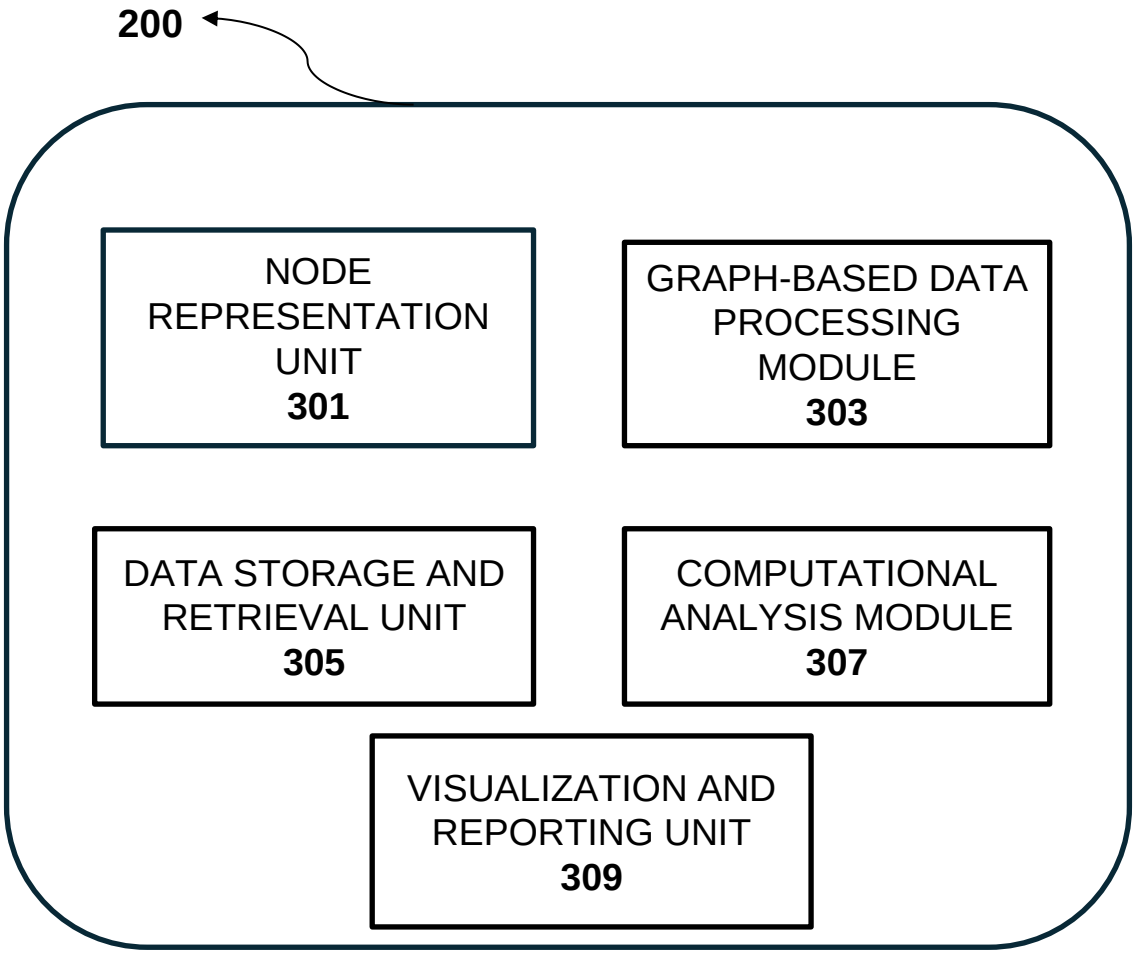

FIG.3A

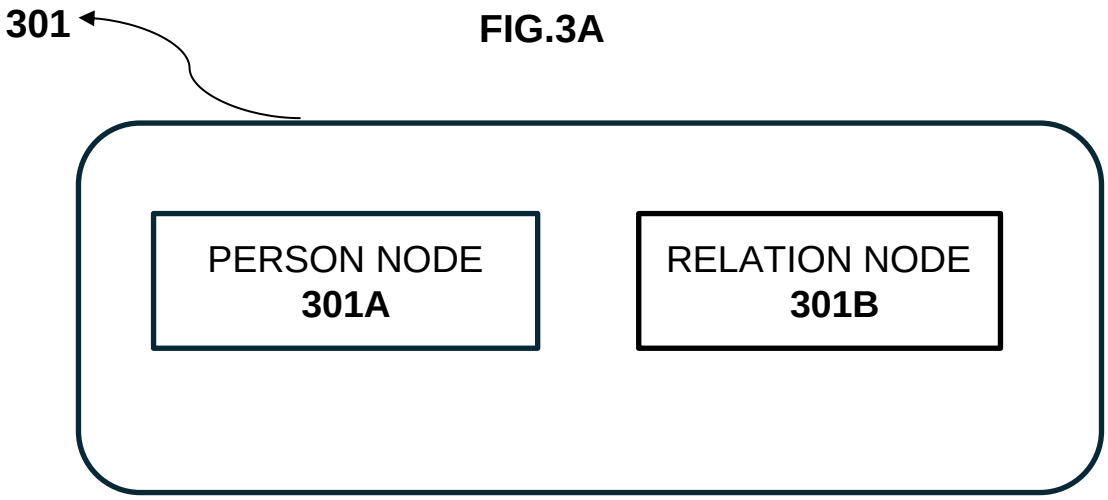

FIG.3B

Pranav bhat

Pranav Bhat (IN/PA 4580)
Agent for the Applicant

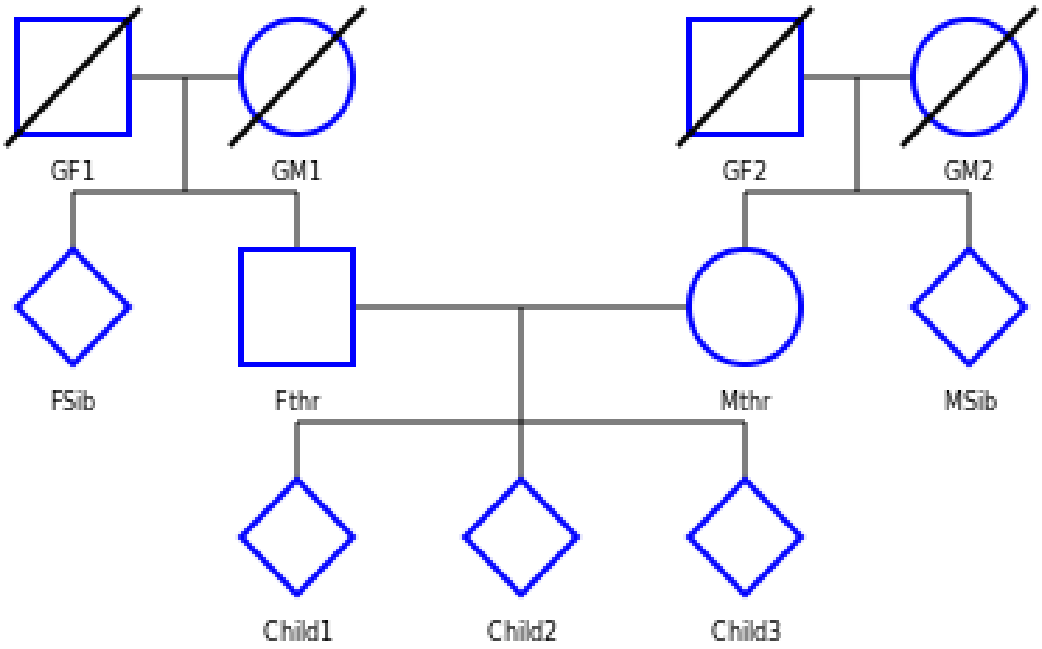

FIG.3C

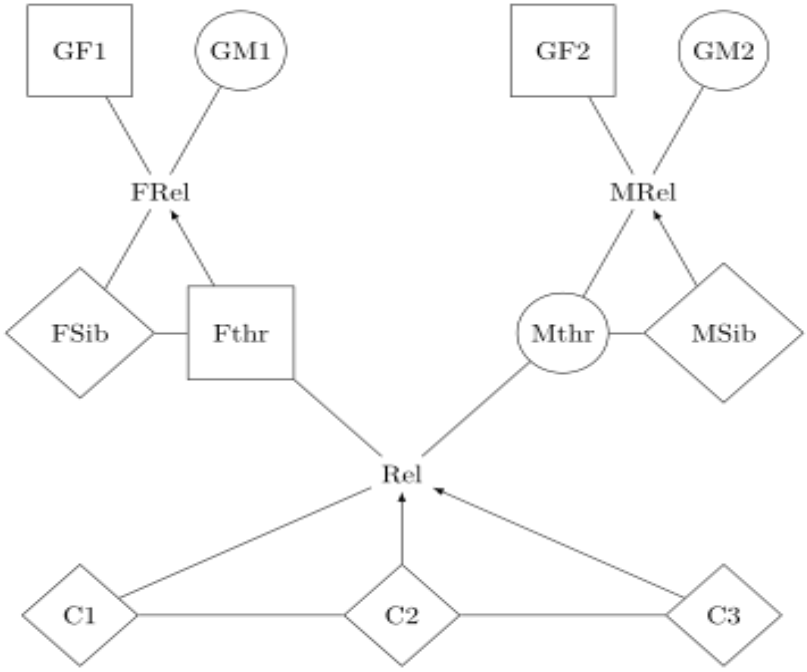

FIG.3D

Pranav Bhat (IN/PA 4580)
Agent for the Applicant

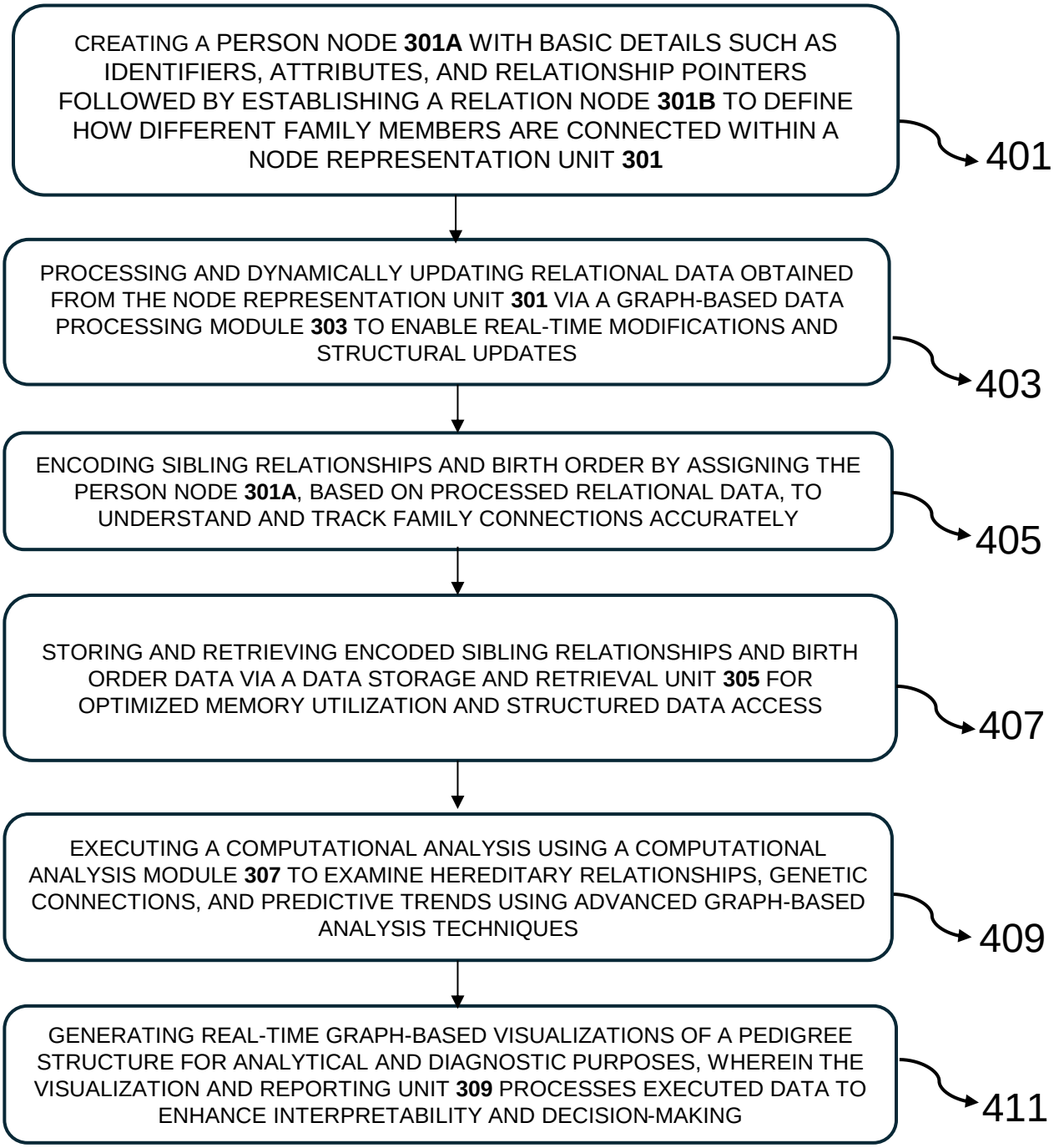

FIG.4

Pranav Bhat

Pranav Bhat (IN/PA 4580)
Agent for the Applicant

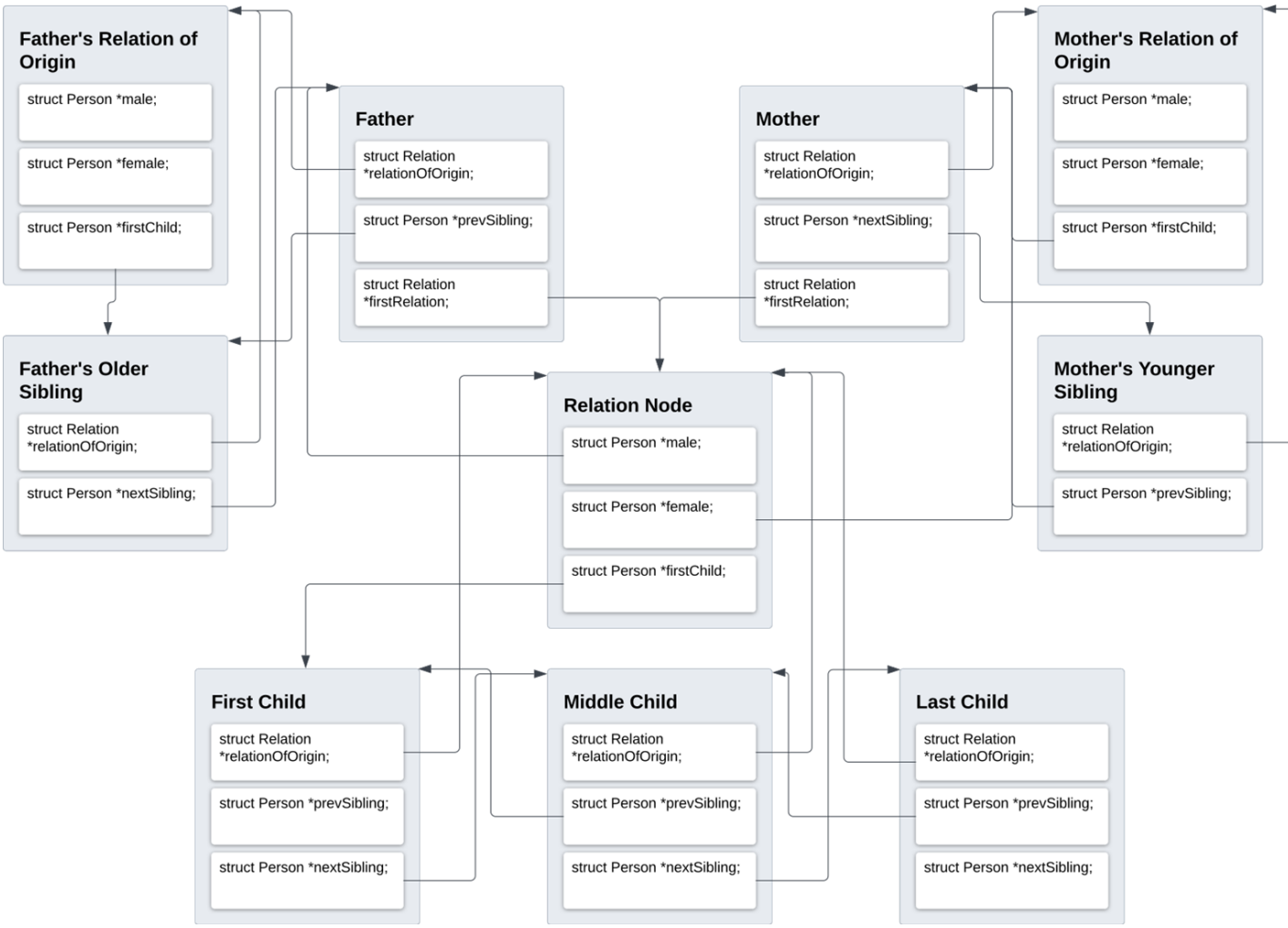

FIG.5

Pranav Bhat

Pranav Bhat (IN/PA 4580)
Agent for the Applicant

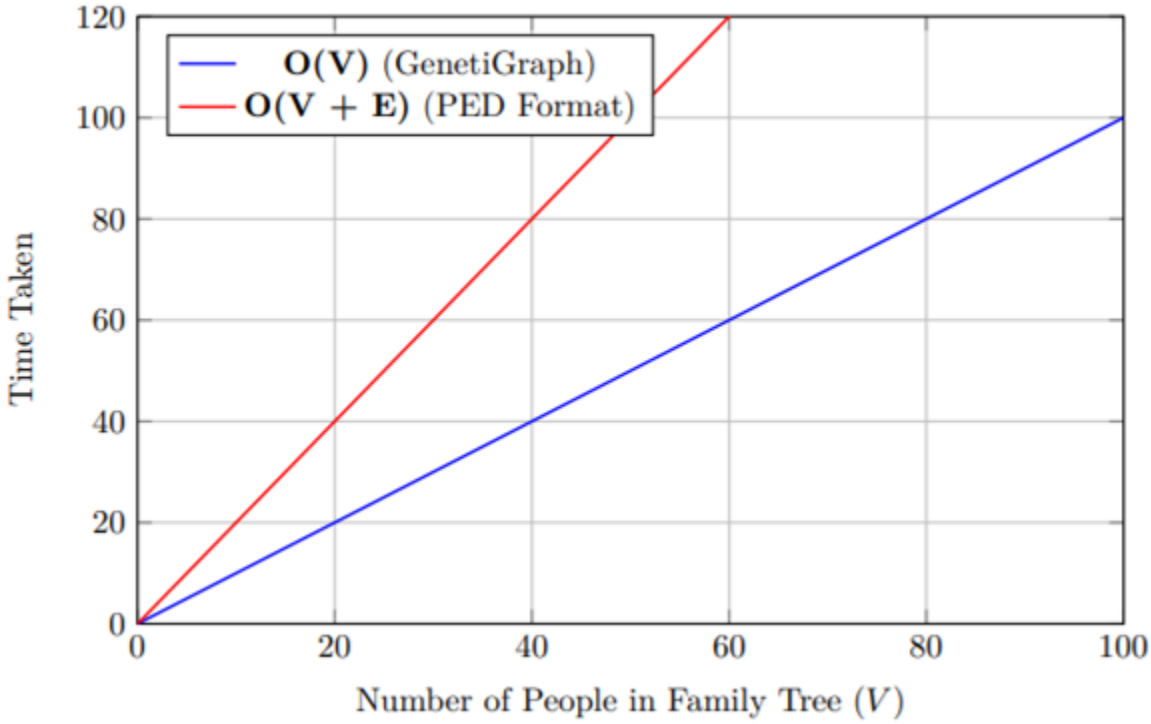

FIG.6A

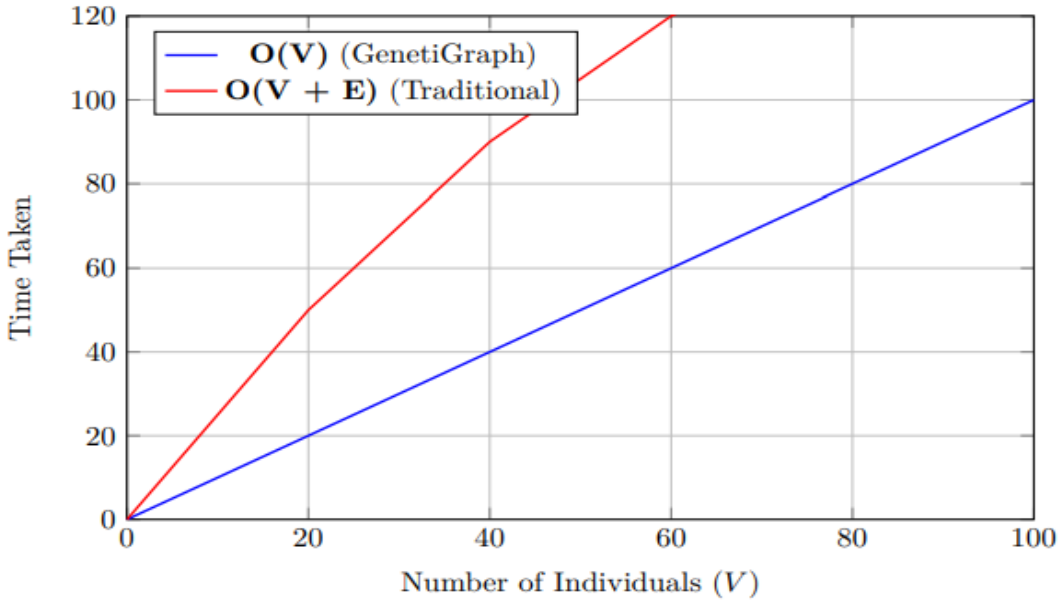

FIG.6B

Pranav bhat

Pranav Bhat (IN/PA 4580)
Agent for the Applicant

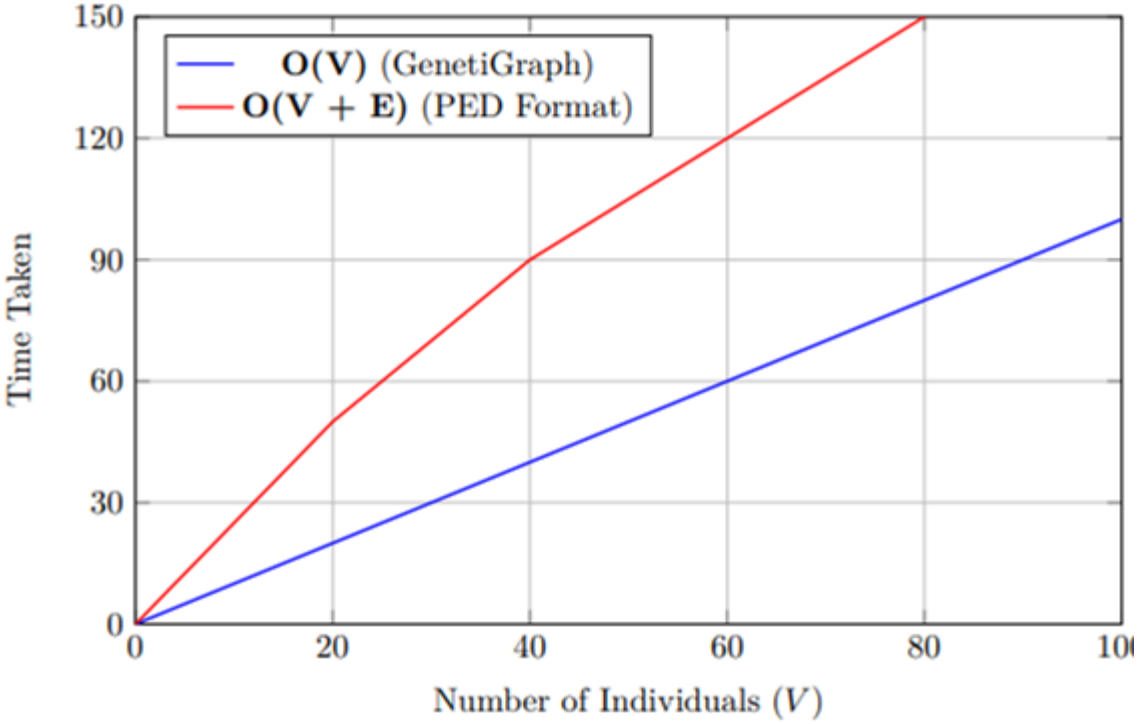

FIG.6C

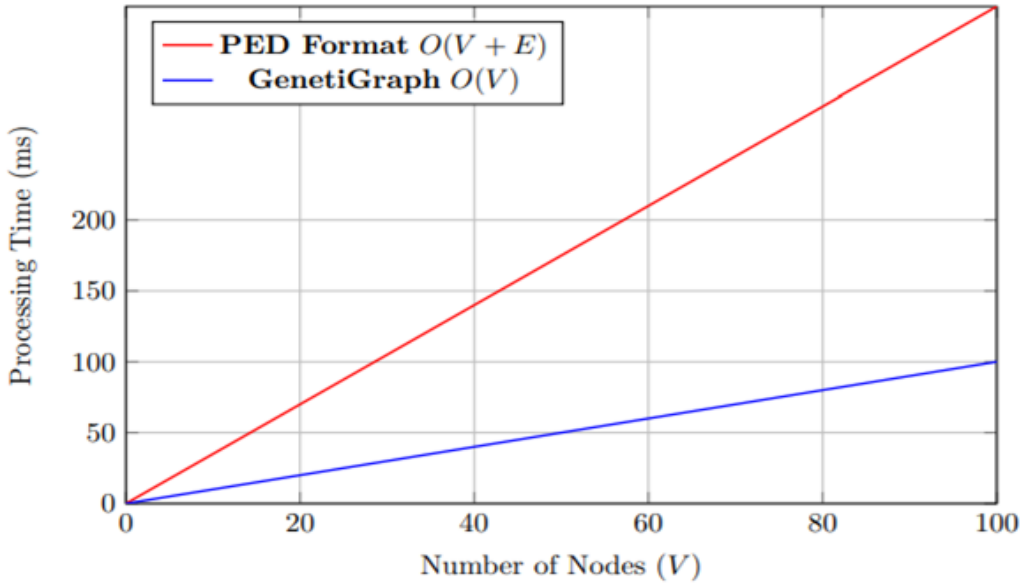

FIG.6D

Pranav Bhat

Pranav Bhat (IN/PA 4580)
Agent for the Applicant

FEATURE	Existing Format (PED File Format)	New Format (Graph-Based System)
Memory Traversal Efficiency	No memory traversal possible	Efficient memory traversal enabled
Encoding of Multiple Characteristics	Only one characteristic can be encoded	More than one characteristic can be encoded (5x-10x improvement)
Memory Access Time	Processing overhead needed	50-70% reduction in access time
Dynamic Updates	Static format, no updates possible	Dynamic updates possible (up to 60% faster data augmentation)
AI and Computational Compatibility	Requires separate modeling, not directly compatible	Readily usable by AI models (80-90% reduced preprocessing time)
Scalability for Large Datasets	Difficult to manage at high volume	Easily scalable (>10 million records)
Traversal Performance	Needs to scan full file to perform some traversals	Most traversals occur in near-linear time (70-90% reduction in data access)
Explicit Relationship Modeling	Some relationships need to be inferred	Explicit relationship modeling (30-50% reduction in error rate)

TABLE.1

Pranav bhat

Pranav Bhat (IN/PA 4580)
Agent for the Applicant