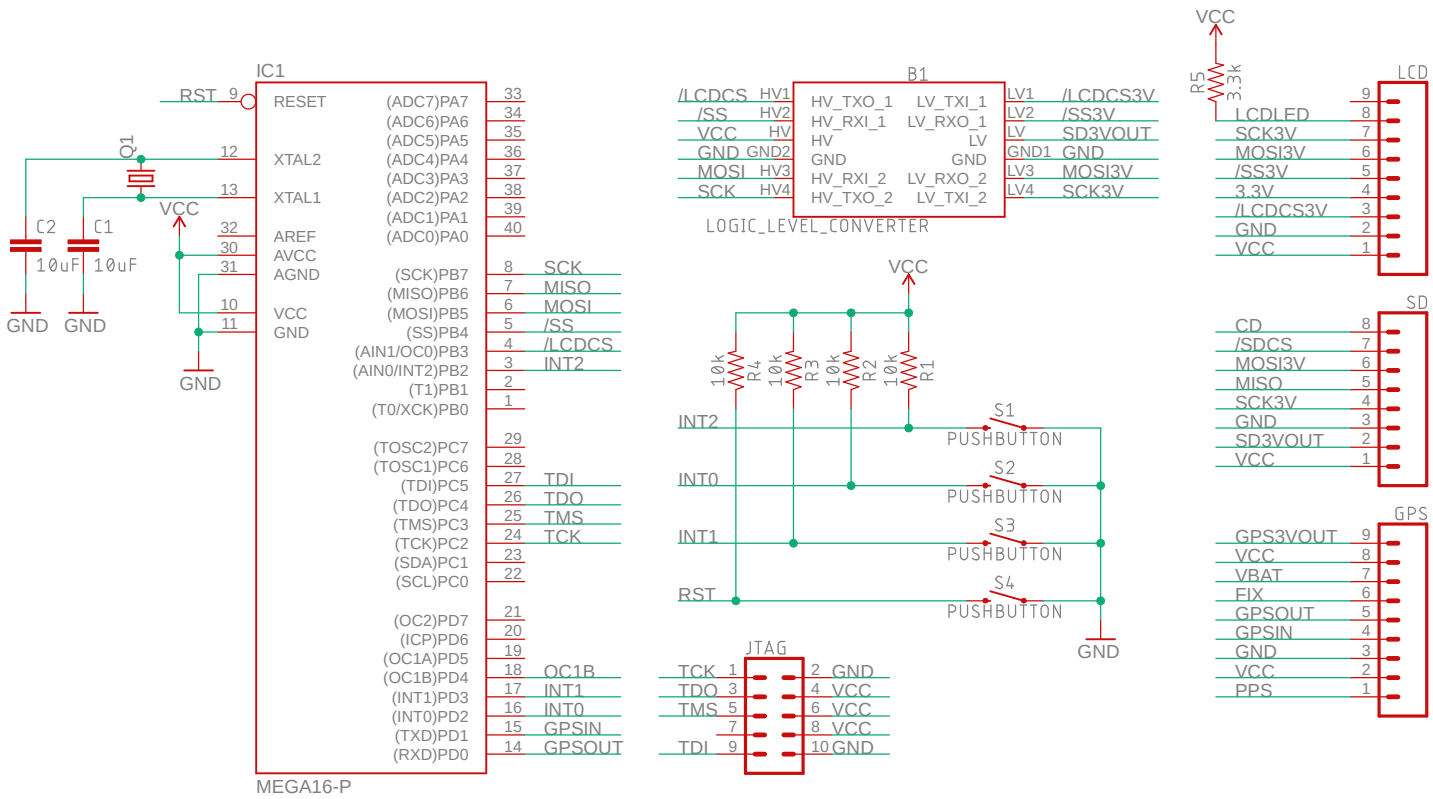

Released under the Creative Commons
Attribution Share-Alike 4.0 License
https://creativecommons.org/licenses/by-sa/4.0/

TITLE: GPS

Design by:

REV:

Date: 9/2/2018 9:15 PM

Sheet: 1/1