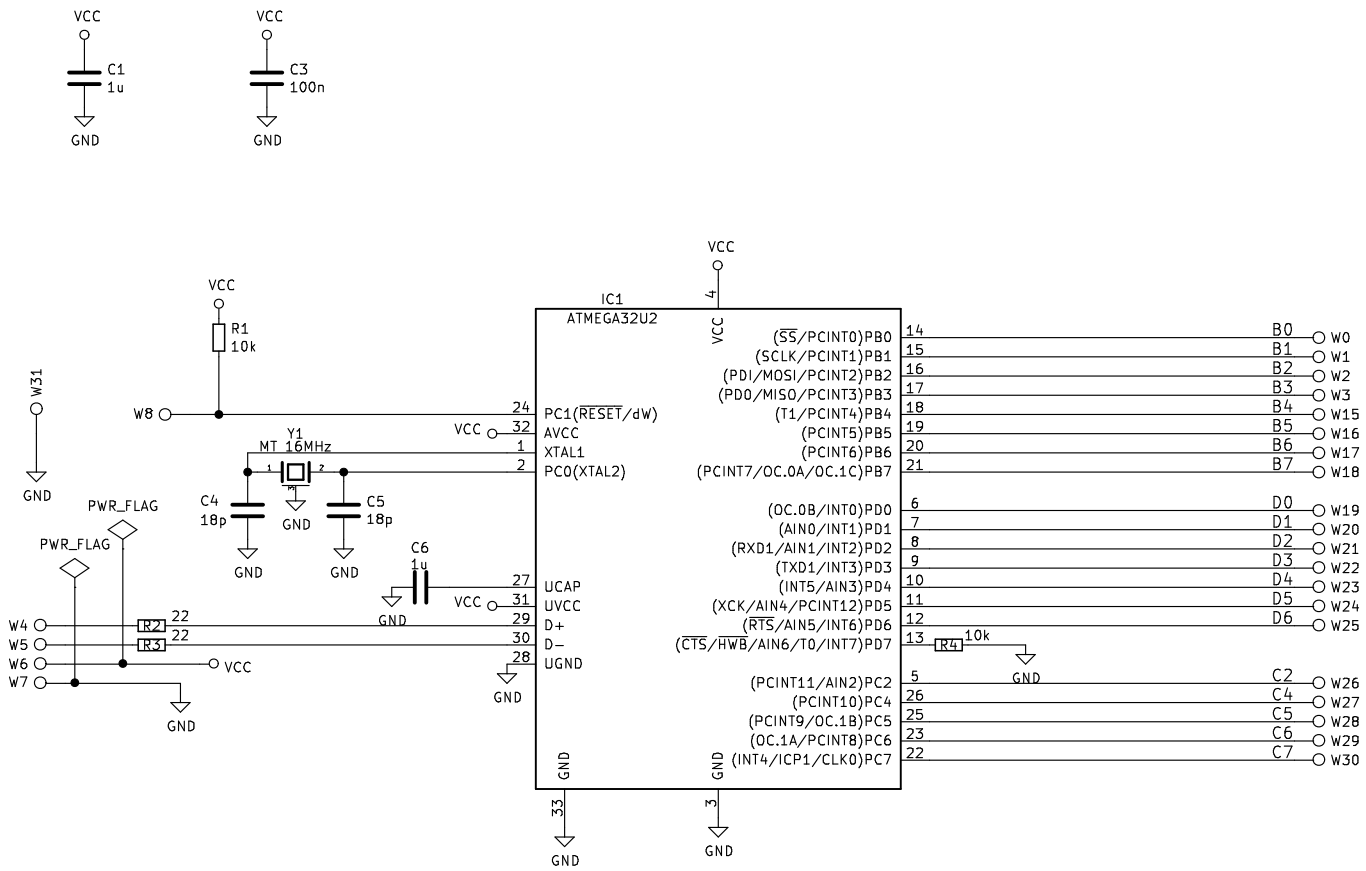

Sheet: /
File: pcb.sch

Title: keytee

Size: A4	Date:	**Rev: 0.1**
KiCad E.D.A. kicad r6904-product		Id: 1/1