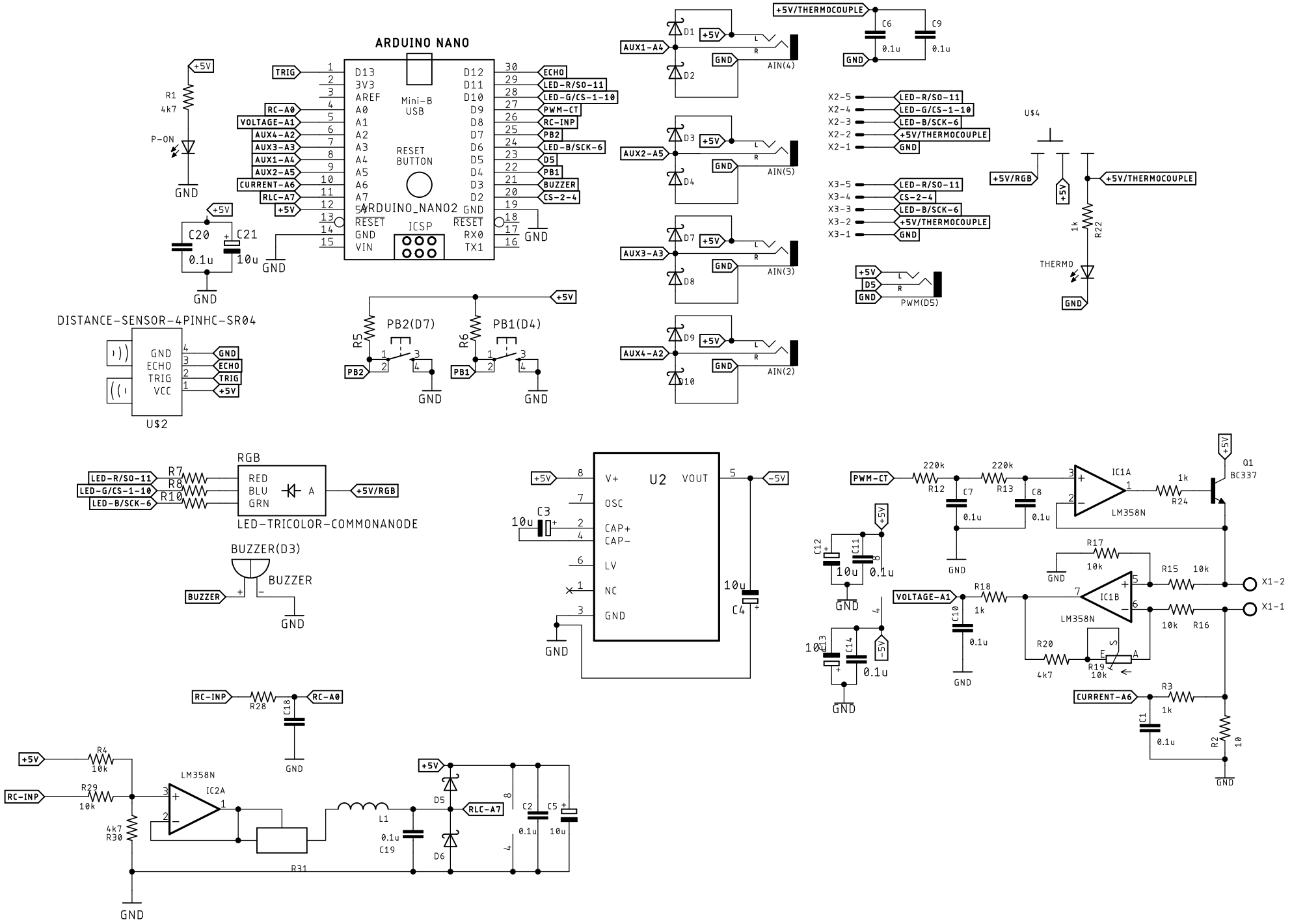
ARDUINO NANO
ARDUINO_NANO2
Mini-B USB
RESET BUTTON
ICSP
D13
3V3
AREF
A0
A1
A2
A3
A4
A5
A6
A7
5V
RESET
GND
VIN
D12
D11
D10
D9
D8
D7
D6
D5
D4
D3
D2
GND
RESET
RX0
TX1
TRIG
RC-A0
VOLTAGE-A1
AUX4-A2
AUX3-A3
AUX1-A4
AUX2-A5
CURRENT-A6
RLC-A7
+5V
ECHO
LED-R/SO-11
LED-G/CS-1-10
PWM-CT
RC-INP
PB2
LED-B/SCK-6
D5
PB1
BUZZER
CS-2-4
R1
4k7
P-ON
C20
0.1u
C21
10u
DISTANCE-SENSOR-4PINHC-SR04
GND
ECHO
TRIG
VCC
U$2
R5
R6
PB2(D7)
PB1(D4)
AUX1-A4
AUX2-A5
AUX3-A3
AUX4-A2
D1
D2
D3
D4
D7
D8
D9
D10
AIN(4)
AIN(5)
AIN(3)
AIN(2)
+5V/THERMOCOUPLE
C6
C9
X2-5
X2-4
X2-3
X2-2
X2-1
LED-R/SO-11
LED-G/CS-1-10
LED-B/SCK-6
+5V/THERMOCOUPLE
GND
X3-5
X3-4
X3-3
X3-2
X3-1
LED-R/SO-11
CS-2-4
LED-B/SCK-6
+5V/THERMOCOUPLE
GND
PWM(D5)
U$4
+5V/RGB
+5V/THERMOCOUPLE
R22
1k
THERMO
RGB
LED-R/SO-11
LED-G/CS-1-10
LED-B/SCK-6
R7
R8
R10
RED
BLU
GRN
A
+5V/RGB
LED-TRICOLOR-COMMONANODE
BUZZER(D3)
BUZZER
U2
V+
OSC
CAP+
CAP-
LV
NC
GND
VOUT
-5V
C3
10u
C4
10u
PWM-CT
R12
220k
R13
220k
C7
C8
0.1u
IC1A
LM358N
R24
1k
Q1
BC337
C12
C11
C13
C14
R17
10k
R15
10k
R16
10k
X1-2
X1-1
VOLTAGE-A1
R18
1k
C10
IC1B
LM358N
R20
4k7
R19
10k
CURRENT-A6
R3
1k
C1
R2
10
RC-INP
R28
C18
RC-A0
R4
10k
R29
10k
R30
4k7
LM358N
IC2A
L1
C19
R31
D5
D6
RLC-A7
C2
C5