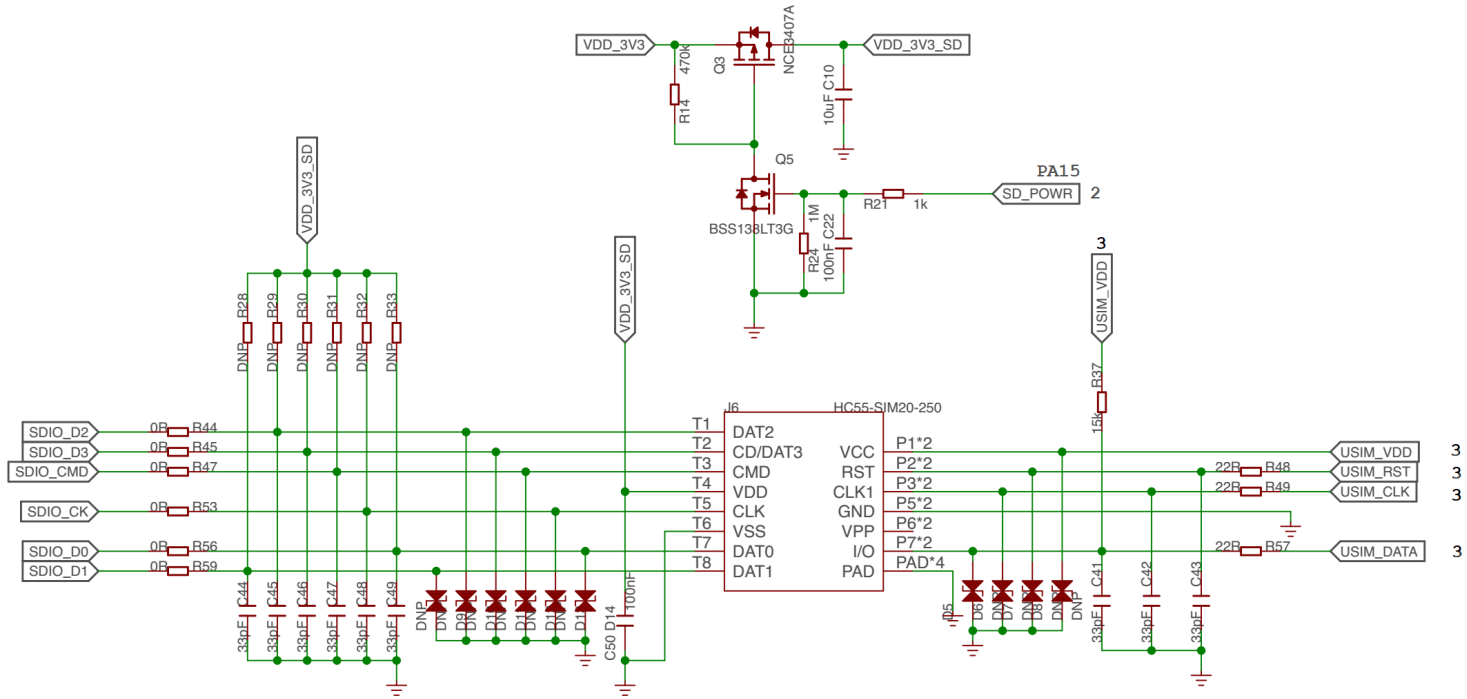

Seeed Studio

TITLE: Wio LTE Cat NB1 v1.02 / SIM_SD

CC-BY-SA

Design:	Check:	
Date: 08/05/2018 16:12	Vision:	Sheet: 5/7