VLSI Design & Practice #8

Direct & Transpose Form FIR Filter

Spring semester, 2025

Hyeon-Gwon Kim
gusrnjs48@korea.ac.kr

Hyunseok Jung
hsj_@korea.ac.kr

Hanjun Choi
gkswns757@korea.ac.kr

Contents

1. 6-tap Direct form FIR filter design

   - Behavioral level or DT level description design

   - Check the functionally and Add the flip

   - Do the synthesis

2. 6-tap Transpose Direct form FIR filter design

   - Behavioral level or DT level description design

   - Check the functionally and Add the flip

   - Do the synthesis

3. Synthesis Results Analysis

   - Compare the experimental results of 2 FIR filters

Contents

1. 6-tap Direct form FIR filter design

   - Behavioral level or DT level description design

   - Check the functionally and Add the flip

   - Do the synthesis

2. 6-tap Transpose Direct form FIR filter design

   - Behavioral level or DT level description design

   - Check the functionally and Add the flip

   - Do the synthesis

3. Synthesis Results Analysis

   - Compare the experimental results of 2 FIR filters

Direct Form FIR Filter

Design 6-tap direct form FIR filter

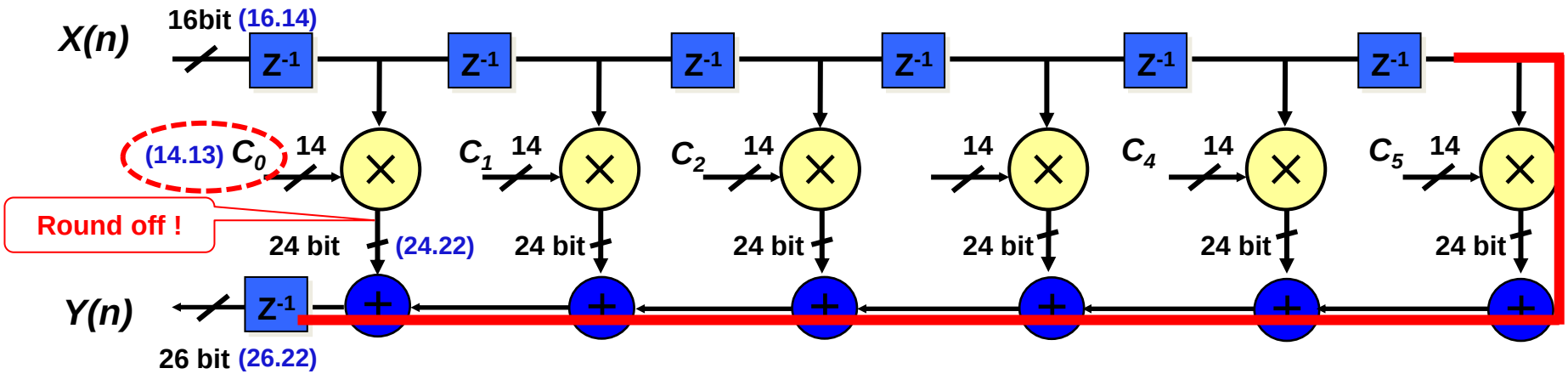

– Use behavioral level modeling technique when you implement the multiplier and adder

Direct Form FIR Filter

Multiplier

```
input  signed [15:0]   a, b;
output  signed [31:0]   c;
assign  c = a*b;
```

```
reg  signed [15:0]   a, b;
reg  signed [31:0]   c;
Always @( )  c = a*b;
```

Round off

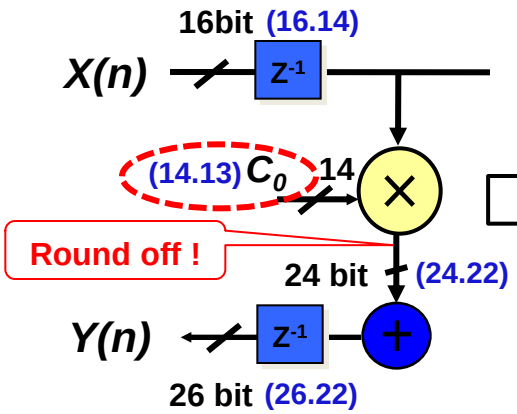

Input = 16.14

Coef. = 14.13

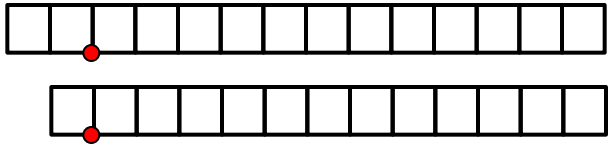

Input ✖ Coef. = 30.27

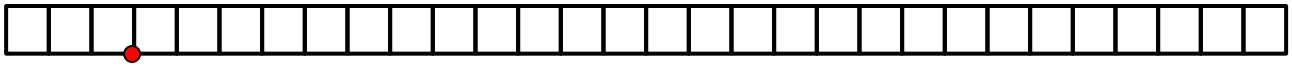

-2 < Input < 2 -1 < Coef. < 1

-2 < Input * Coef. < 2

24.22

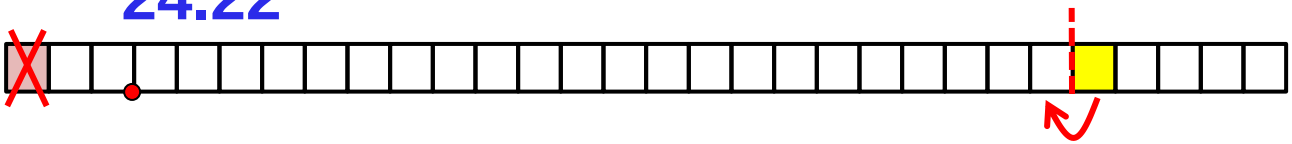

Direct Form FIR Filter

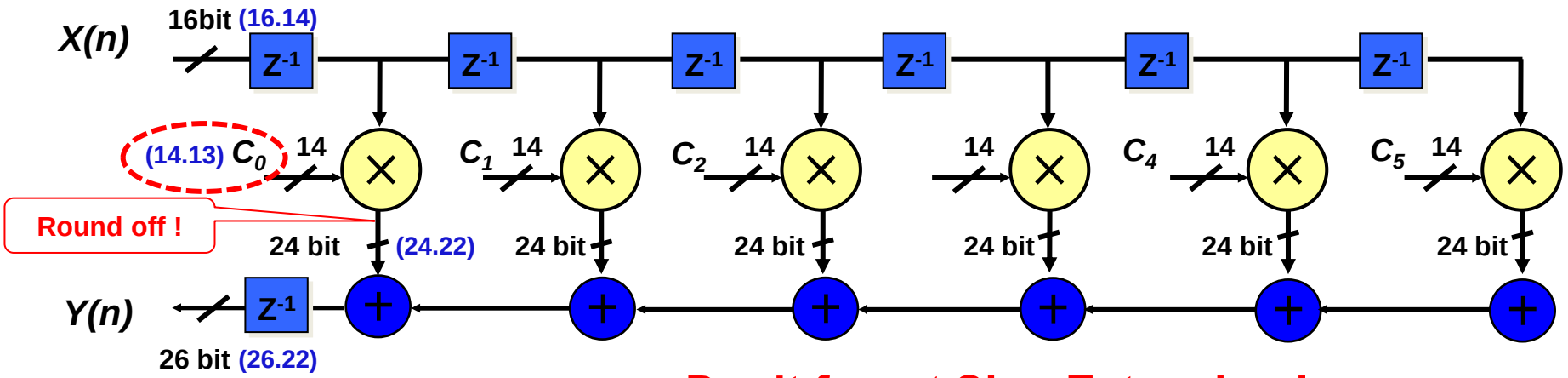

Don't forget Sign Extension !

Why 26.22 ?

-2 < input < 2

-6 < output < 6

C0 =	-0.167480468750000	C0 =	11_1010_1010_0100
C1 =	0.631225585937500	C1 =	01_0100_0011_0011
C2 =	0.444213867187500	C2 =	00_1110_0011_0111
C3 =	0.823120117187500	C3 =	01_1010_0101_0111
C4 =	0.284057617187500	C4 =	00_1001_0001_0111
C5 =	-0.621459960937500	C5 =	10_1100_0001_1101

sum [abs (coefficients)] ≈ 3.0

Functionality Verification

6-tap FIR filter Verilog code & Verification

Test Vectors are given

Please do the vector match

Think about the clock cycles and number of input/output

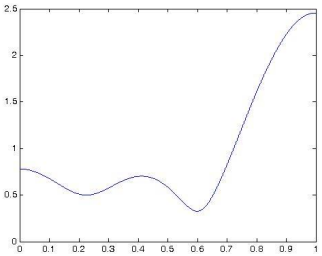

Intput memory (256x16)

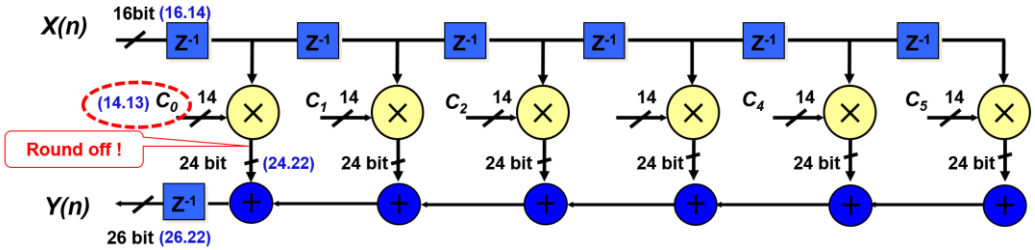

Output memory (256x26)

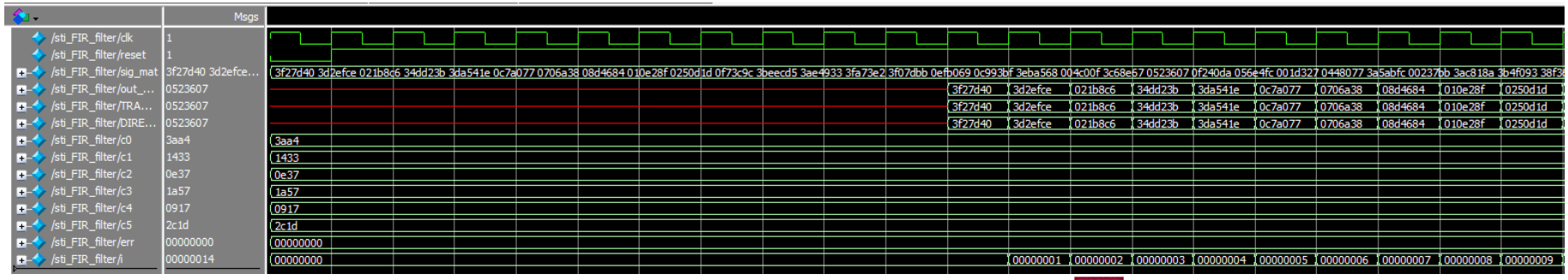

Find the minimum clock period

- Synthesis the FIR filter part only

Get the filter coefficients as inputs

You have to add FF for synthesize!

Input memory (256x16)

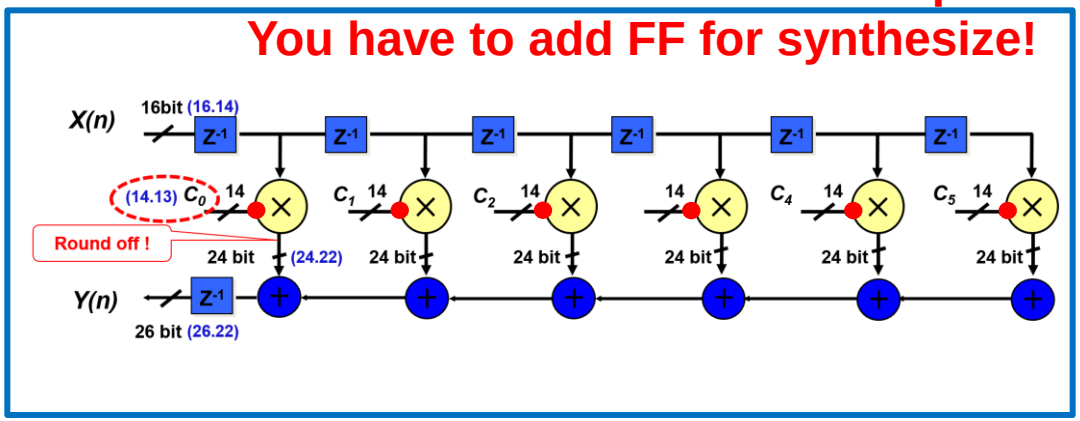

Output memory (256x26)

- Check the maximum clock speed and critical path

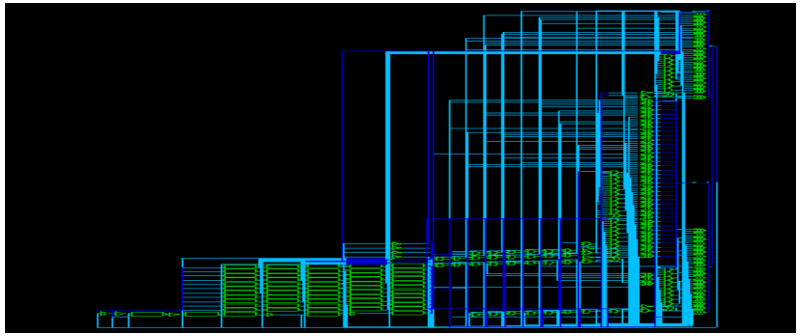

Ctrl+H to highlight critical path

Contents

1. 6-tap Direct form FIR filter design

   - Behavioral level or DT level description design

   - Check the functionally and Add the flip

   - Do the synthesis

2. 6-tap Transpose Direct form FIR filter design

   - Behavioral level or DT level description design

   - Check the functionally and Add the flip

   - Do the synthesis

3. Synthesis Results Analysis

   - Compare the experimental results of 2 FIR filters

Transpose Direct Form FIR Filter

Design 6-tap transposed form FIR filter

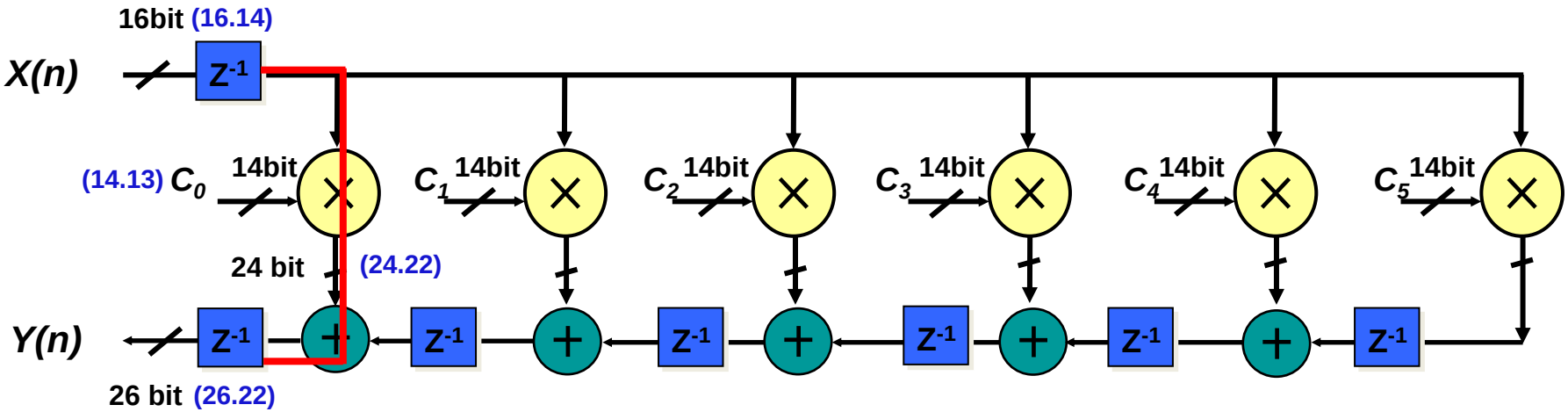

– Use behavioral level modeling technique when you implement the multiplier and adder

Functionality Verification

6-tap FIR filter Verilog code & Verification

Test Vectors are given
Please do the vector match
Think about the clock cycles and number of input/output

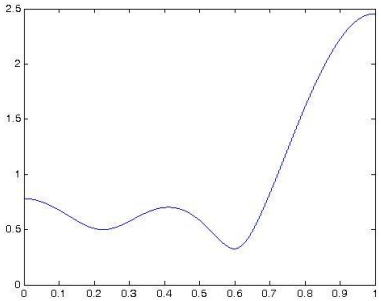

Input memory (256x16)

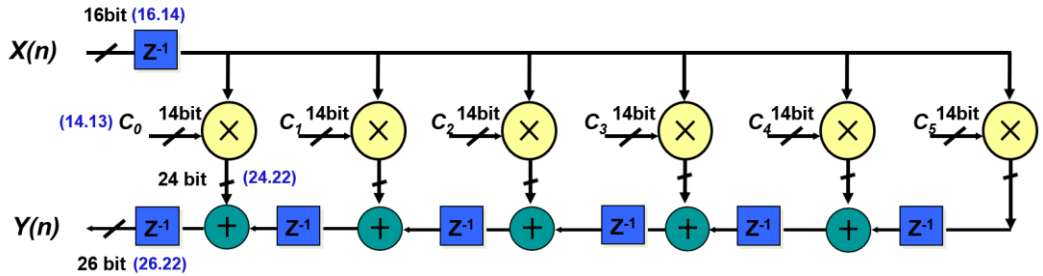

Output memory (256x26)

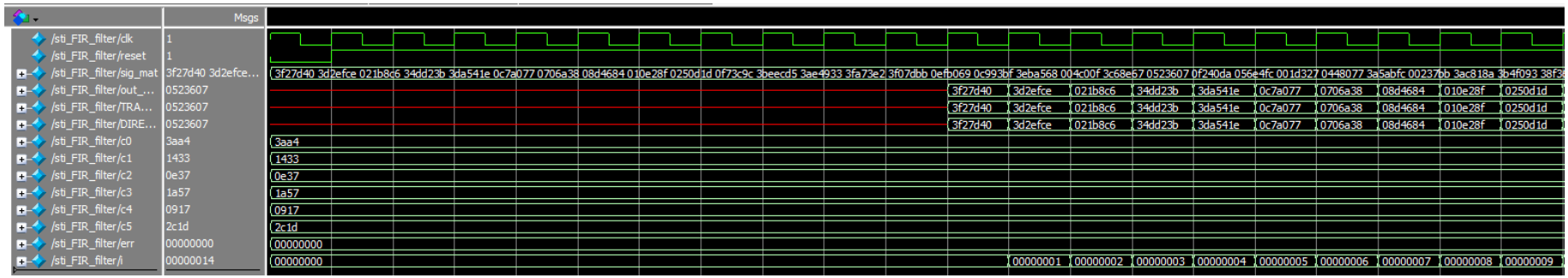

Find the minimum clock period

- Synthesis the FIR filter part only

Get the filter coefficients as inputs

You have to add FF for synthesize!

Input memory (256x16)

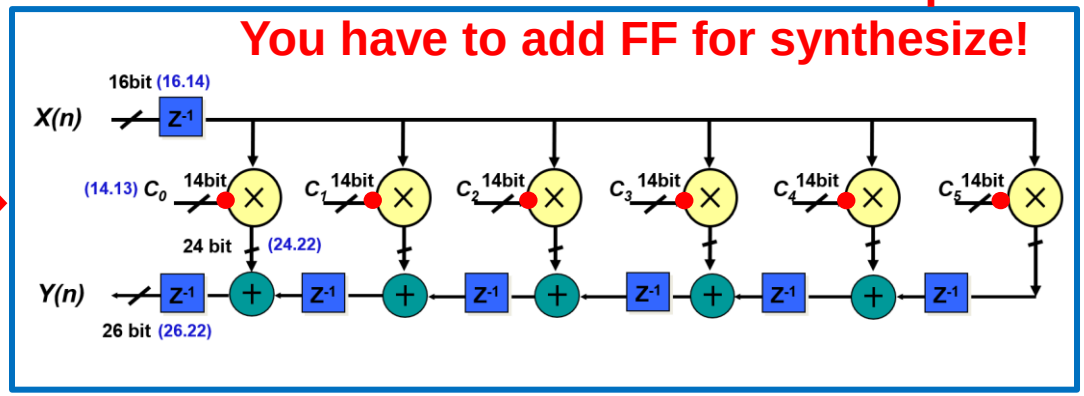

Output memory (256x26)

- Check the maximum clock speed and critical path

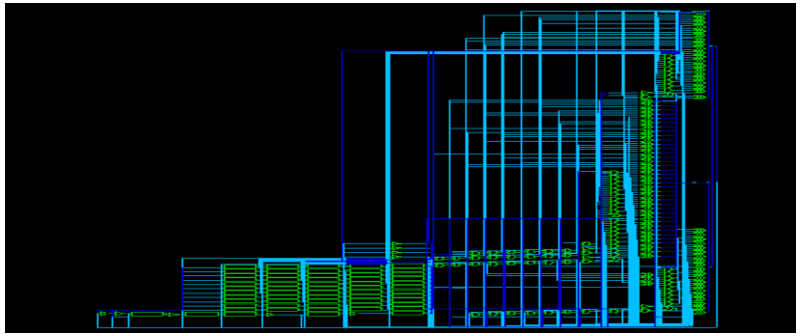

Ctrl+H to highlight critical path

Contents

1. 6 tap Direct form FIR filter design

   - Behavioral level or DT level description design

   - Check the functionally and Add the flip

   - Do the synthesis

2. 6 tap Transpose Direct form FIR filter design

   - Behavioral level or DT level description design

   - Check the functionally and Add the flip

   - Do the synthesis

3. **Synthesis Results Analysis**

   - Compare the experimental results of 2 FIR filters

Check results and Submit report

- Check the synthesis result
  - Show waveforms & synthesis results (schematic)
  - Show timing, area, power report & .v file
  - Compare the performance and area of 2 filters
    - Check the highlighted critical path and timing report
- Submit result report
  - Show the timing diagram and the above synthesis results
- Due : Before the next class to the TA in charge of your group.