VLSI Design & Project 01

Matrix Multiplication

Spring semester, 2025

Hyeon-Gwon Kim
gusrnjs48@korea.ac.kr

Hyunseok Jung
hsj_@korea.ac.kr

Hanjun Choi
gkswns757@korea.ac.kr

Matrix Multiplication

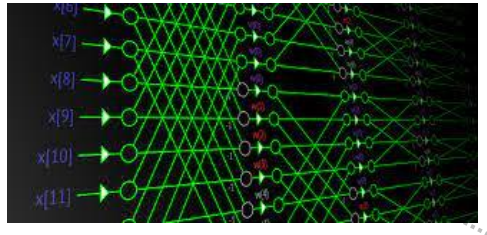

Signal Processing

Statistics

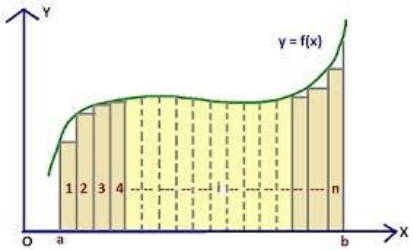

Numerical Analysis

Matrix Multiplication

Astrophysics

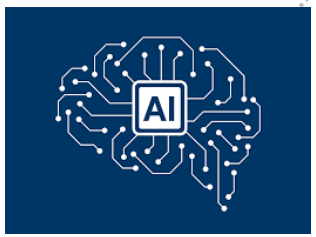

Artificial Intelligence

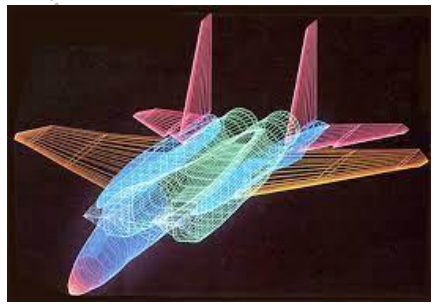

Computer Graphics

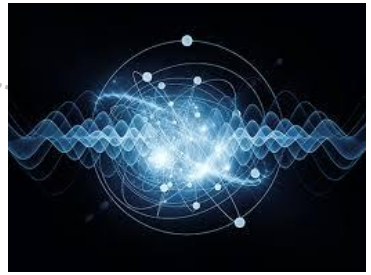

Quantum Physics

VLSI Signal Processing Laboratory

Matrix Multiplication

Designing Matrix Multiplication Controller !

What is Matrix Multiplication ?

$$\begin{bmatrix} a_{11} & a_{12} & a_{13} \\ a_{21} & a_{21} & a_{23} \\ a_{31} & a_{32} & a_{33} \end{bmatrix} * \begin{bmatrix} b_{11} & b_{12} & b_{13} \\ b_{21} & b_{21} & b_{23} \\ b_{31} & b_{32} & b_{33} \end{bmatrix} = \begin{bmatrix} c_{11} & c_{12} & c_{13} \\ c_{21} & c_{21} & c_{23} \\ a_{31} & a_{32} & a_{33} \end{bmatrix}$$

$$\mathbf{c_{ij}} = \sum_{k=1}^{3} \boldsymbol{a_{ik}} \times \boldsymbol{b_{kj}}$$

VLSI Signal Processing Laboratory

Processing Matrix Multiplication

Storing Matrix Data?

< A : 6 x 6 Matrix >

$A_{1,1}$	$A_{1,2}$	$A_{1,3}$	$A_{1,4}$	$A_{1,5}$	$A_{1,6}$
$A_{2,1}$	$A_{2,2}$	$A_{2,3}$	$A_{2,4}$	$A_{2,5}$	$A_{2,6}$
$A_{3,1}$	$A_{3,2}$	$A_{3,3}$	$A_{3,4}$	$A_{3,5}$	$A_{3,6}$
$A_{4,1}$	$A_{4,2}$	$A_{4,3}$	$A_{4,4}$	$A_{4,5}$	$A_{4,6}$
$A_{5,1}$	$A_{5,2}$	$A_{5,3}$	$A_{5,4}$	$A_{5,5}$	$A_{5,6}$
$A_{6,1}$	$A_{6,2}$	$A_{6,3}$	$A_{6,4}$	$A_{6,5}$	$A_{6,6}$

SRAM

addr	0	1	2	3	4	5	6	7	8	...
data	$A_{1,1}$	$A_{1,2}$	$A_{1,3}$	$A_{1,4}$	$A_{1,5}$	$A_{1,6}$	$A_{2,1}$	$A_{2,2}$	$A_{2,3}$	...

Row-wise Data Format

For 6 x 6 matrix with row-wise data format,
$A_{2,1}$ is stored in address 6 of the SRAM
$A_{r,c}$ is stored in address $((r-1)\times 6+(c-1))$ of the SRAM

VLSI Signal Processing Laboratory

Processing Matrix Multiplication

How many computation?

< A : 6 x 6 Matrix >

$A_{1,1}$	$A_{1,2}$	$A_{1,3}$	$A_{1,4}$	$A_{1,5}$	$A_{1,6}$
$A_{2,1}$	$A_{2,2}$	$A_{2,3}$	$A_{2,4}$	$A_{2,5}$	$A_{2,6}$
$A_{3,1}$	$A_{3,2}$	$A_{3,3}$	$A_{3,4}$	$A_{3,5}$	$A_{3,6}$
$A_{4,1}$	$A_{4,2}$	$A_{4,3}$	$A_{4,4}$	$A_{4,5}$	$A_{4,6}$
$A_{5,1}$	$A_{5,2}$	$A_{5,3}$	$A_{5,4}$	$A_{5,5}$	$A_{5,6}$
$A_{6,1}$	$A_{6,2}$	$A_{6,3}$	$A_{6,4}$	$A_{6,5}$	$A_{6,6}$

*

< B : 6 x 6 Matrix >

$B_{1,1}$	$B_{1,2}$	$B_{1,3}$	$B_{1,4}$	$B_{1,5}$	$B_{1,6}$
$B_{2,1}$	$B_{2,2}$	$B_{2,3}$	$B_{2,4}$	$B_{2,5}$	$B_{2,6}$
$B_{3,1}$	$B_{3,2}$	$B_{3,3}$	$B_{3,4}$	$B_{3,5}$	$B_{3,6}$
$B_{4,1}$	$B_{4,2}$	$B_{4,3}$	$B_{4,4}$	$B_{4,5}$	$B_{4,6}$
$B_{5,1}$	$B_{5,2}$	$B_{5,3}$	$B_{5,4}$	$B_{5,5}$	$B_{5,6}$
$B_{6,1}$	$B_{6,2}$	$B_{6,3}$	$B_{6,4}$	$B_{6,5}$	$B_{6,6}$

=

< C : 6 x 6 Matrix >

$C_{1,1}$	$C_{1,2}$	$C_{1,3}$	$C_{1,4}$	$C_{1,5}$	$C_{1,6}$
$C_{2,1}$	$C_{2,2}$	$C_{2,3}$	$C_{2,4}$	$C_{2,5}$	$C_{2,6}$
$C_{3,1}$	$C_{3,2}$	$C_{3,3}$	$C_{3,4}$	$C_{3,5}$	$C_{3,6}$
$C_{4,1}$	$C_{4,2}$	$C_{4,3}$	$C_{4,4}$	$C_{4,5}$	$C_{4,6}$
$C_{5,1}$	$C_{5,2}$	$C_{5,3}$	$C_{5,4}$	$C_{5,5}$	$C_{5,6}$
$C_{6,1}$	$C_{6,2}$	$C_{6,3}$	$C_{6,4}$	$C_{6,5}$	$C_{6,6}$

$$C_{1,1} = A_{1,1} \times B_{1,1} + A_{1,2} \times B_{2,1} + A_{1,3} \times B_{3,1} + A_{1,4} \times B_{4,1} + A_{1,5} \times B_{5,1} + A_{1,6} \times B_{6,1}$$

6 multiplications & accumulation for processing $C_{1,1}$

6 cycles of computation with single computation unit

VLSI Signal Processing Laboratory

Processing Matrix Multiplication

Computation Unit

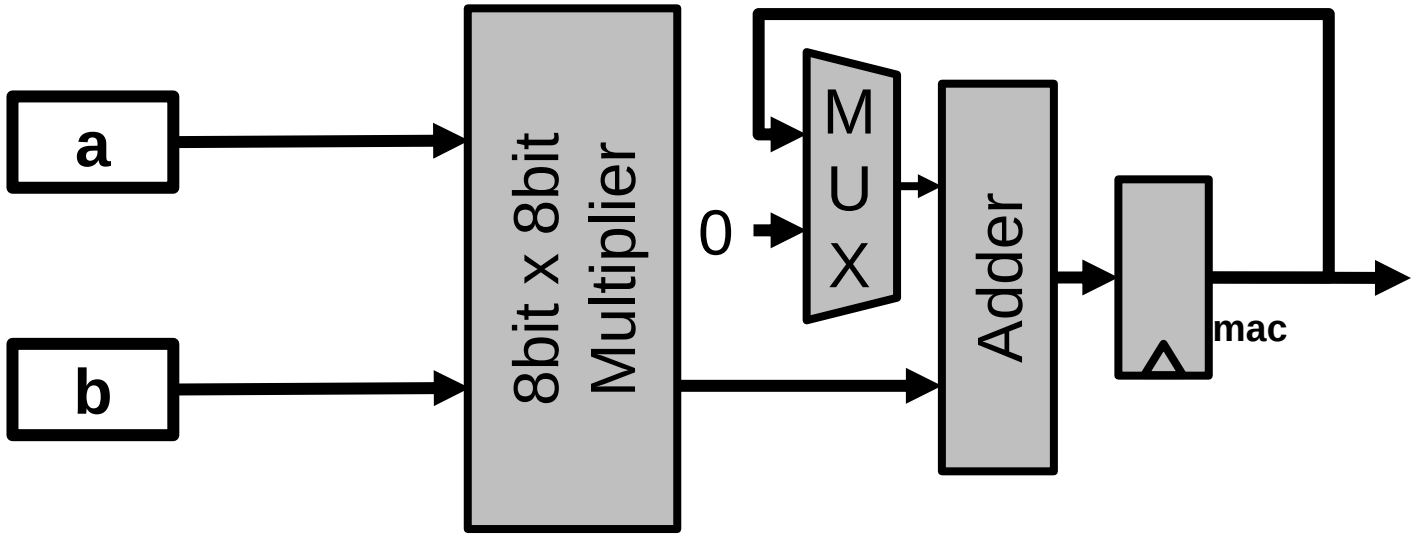

$$c_{ij} = \sum_{k=1}^{n} a_{ik} \times b_{kj}$$

Multiply-Accumulation (MAC) unit processes matrix multiplication
→ You can design this module in behavior modeling

VLSI Signal Processing Laboratory

Matrix Multiplication Controller

Storing Matrix Data Format

< A: 6 x 6 Matrix >

A0	A1	A2	A3	A4	A5
A6	A7	A8	A9	A10	A11
A12	A13	A14	A15	A16	A17
A18	A19	A20	A21	A22	A23
A24	A25	A26	A27	A28	A29
A30	A31	A32	A33	A34	A35

< B: 6 x 6 Matrix >

B0	B1	B2	B3	B4	B5
B6	B7	B8	B9	B10	B11
B12	B13	B14	B15	B16	B17
B18	B19	B20	B21	B22	B23
B24	B25	B26	B27	B28	B29
B30	B31	B32	B33	B34	B35

address *SRAM* (Row-wise Data Format)

address	
0	A0
1	A1
2	A2
3	A3
4	A4
5	A5
6	A6
7	A7
⋮	A8
	A9
	⋮

address	
0	B0
1	B1
2	B2
3	B3
4	B4
5	B5
6	B6
7	B7
⋮	B8
	B9
	⋮

VLSI Signal Processing Laboratory

Matrix Multiplication Controller

< A : 6 x 6 Matrix >

A0	A1	A2	A3	A4	A5
A6	A7	A8	A9	A10	A11
A12	A13	A14	A15	A16	A17
A18	A19	A20	A21	A22	A23
A24	A25	A26	A27	A28	A29
A30	A31	A32	A33	A34	A35

< B : 6 x 6 Matrix >

B0	B1	B2	B3	B4	B5
B6	B7	B8	B9	B10	B11
B12	B13	B14	B15	B16	B17
B18	B19	B20	B21	B22	B23
B24	B25	B26	B27	B28	B29
B30	B31	B32	B33	B34	B35

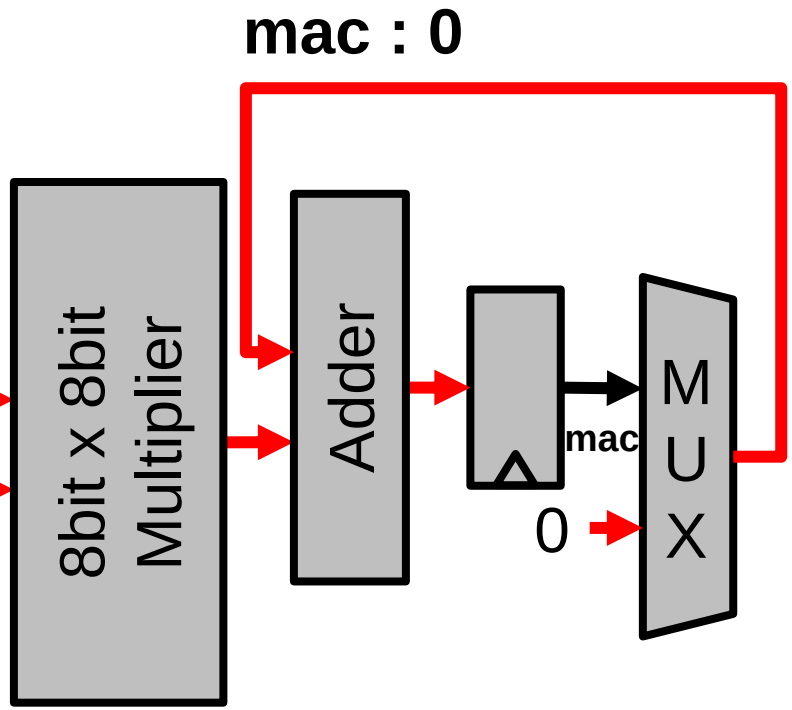

< C : 6 x 6 Matrix >

C0	C1	C2	C3	C4	C5
C6	C7	C8	C9	C10	C11
C12	C13	C14	C15	C16	C17
C18	C19	C20	C21	C21	C23
C24	C25	C26	C27	C28	C29
C30	C31	C32	C33	C34	C35

Cycle 0

VLSI Signal Processing Laboratory

Matrix Multiplication Controller

Storing Matrix Data Format

< A: 6 x 6 Matrix >

A0	A1	A2	A3	A4	A5
A6	A7	A8	A9	A10	A11
A12	A13	A14	A15	A16	A17
A18	A19	A20	A21	A22	A23
A24	A25	A26	A27	A28	A29
A30	A31	A32	A33	A34	A35

< B: 6 x 6 Matrix >

B0	B1	B2	B3	B4	B5
B6	B7	B8	B9	B10	B11
B12	B13	B14	B15	B16	B17
B18	B19	B20	B21	B22	B23
B24	B25	B26	B27	B28	B29
B30	B31	B32	B33	B34	B35

address *SRAM* (Row-wise Data Format)

address	
0	A0
1	A1
2	A2
3	A3
4	A4
5	A5
6	A6
7	A7
⋮	A8
	A9
	⋮

address	
0	B0
1	B1
2	B2
3	B3
4	B4
5	B5
6	B6
7	B7
⋮	B8
	B9
	⋮

VLSI Signal Processing Laboratory

Matrix Multiplication Controller

< A : 6 x 6 Matrix >

A0	A1	A2	A3	A4	A5
A6	A7	A8	A9	A10	A11
A12	A13	A14	A15	A16	A17
A18	A19	A20	A21	A22	A23
A24	A25	A26	A27	A28	A29
A30	A31	A32	A33	A34	A35

< B : 6 x 6 Matrix >

B0	B1	B2	B3	B4	B5
B6	B7	B8	B9	B10	B11
B12	B13	B14	B15	B16	B17
B18	B19	B20	B21	B22	B23
B24	B25	B26	B27	B28	B29
B30	B31	B32	B33	B34	B35

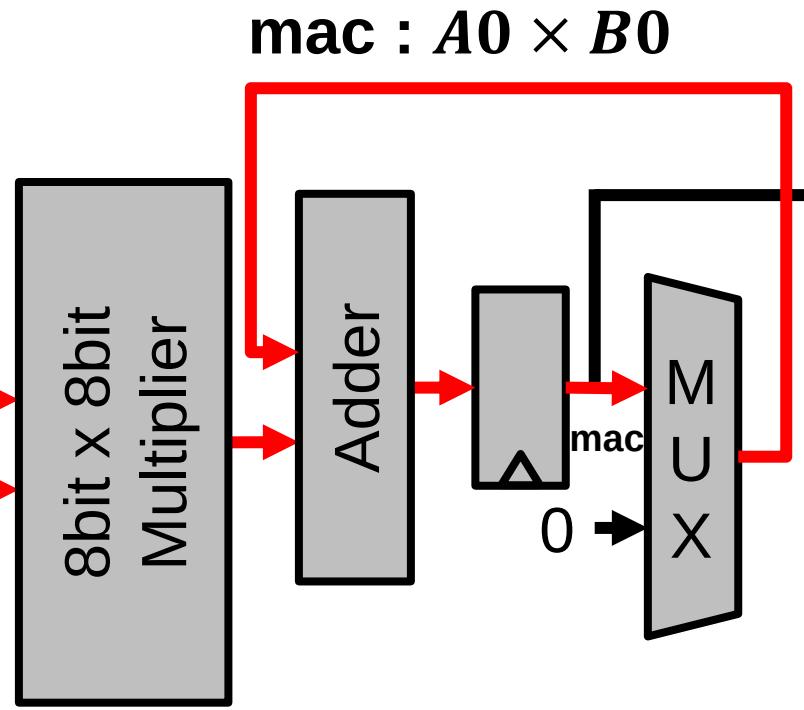

< C : 6 x 6 Matrix >

C0	C1	C2	C3	C4	C5
C6	C7	C8	C9	C10	C11
C12	C13	C14	C15	C16	C17
C18	C19	C20	C21	C21	C23
C24	C25	C26	C27	C28	C29
C30	C31	C32	C33	C34	C35

Cycle 1

VLSI Signal Processing Laboratory

Matrix Multiplication Controller

Storing Matrix Data Format

< A: 6 x 6 Matrix >

A0	A1	A2	A3	A4	A5
A6	A7	A8	A9	A10	A11
A12	A13	A14	A15	A16	A17
A18	A19	A20	A21	A22	A23
A24	A25	A26	A27	A28	A29
A30	A31	A32	A33	A34	A35

< B: 6 x 6 Matrix >

B0	B1	B2	B3	B4	B5
B6	B7	B8	B9	B10	B11
B12	B13	B14	B15	B16	B17
B18	B19	B20	B21	B22	B23
B24	B25	B26	B27	B28	B29
B30	B31	B32	B33	B34	B35

address *SRAM* (Row-wise Data Format)

address	
0	A0
1	A1
2	A2
3	A3
4	A4
5	A5
6	A6
7	A7
⋮	A8
	A9
	⋮

address	
0	B0
1	B1
2	B2
3	B3
4	B4
5	B5
6	B6
7	B7
⋮	B8
	B9
	⋮
	B12

VLSI Signal Processing Laboratory

Matrix Multiplication Controller

< A : 6 x 6 Matrix >

A0	A1	A2	A3	A4	A5
A6	A7	A8	A9	A10	A11
A12	A13	A14	A15	A16	A17
A18	A19	A20	A21	A22	A23
A24	A25	A26	A27	A28	A29
A30	A31	A32	A33	A34	A35

< B : 6 x 6 Matrix >

B0	B1	B2	B3	B4	B5
B6	B7	B8	B9	B10	B11
B12	B13	B14	B15	B16	B17
B18	B19	B20	B21	B22	B23
B24	B25	B26	B27	B28	B29
B30	B31	B32	B33	B34	B35

mac : $A0 \times B0 + A1 \times B6$

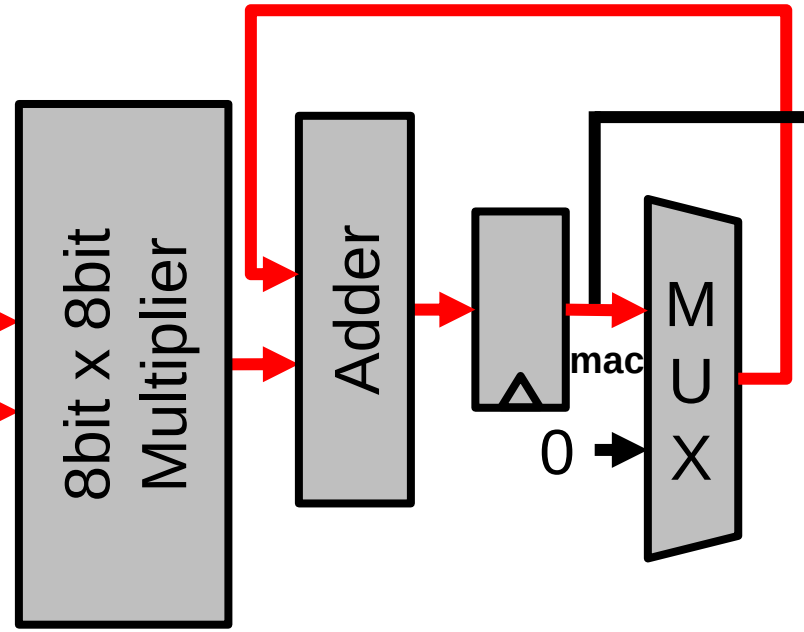

< C : 6 x 6 Matrix >

C0	C1	C2	C3	C4	C5
C6	C7	C8	C9	C10	C11
C12	C13	C14	C15	C16	C17
C18	C19	C20	C21	C21	C23
C24	C25	C26	C27	C28	C29
C30	C31	C32	C33	C34	C35

Cycle 2

VLSI Signal Processing Laboratory

Matrix Multiplication Controller

< A : 6 x 6 Matrix >

A0	A1	A2	A3	A4	A5
A6	A7	A8	A9	A10	A11
A12	A13	A14	A15	A16	A17
A18	A19	A20	A21	A22	A23
A24	A25	A26	A27	A28	A29
A30	A31	A32	A33	A34	A35

< B : 6 x 6 Matrix >

B0	B1	B2	B3	B4	B5
B6	B7	B8	B9	B10	B11
B12	B13	B14	B15	B16	B17
B18	B19	B20	B21	B22	B23
B24	B25	B26	B27	B28	B29
B30	B31	B32	B33	B34	B35

mac : $A0 \times B0 + \cdots + A4 \times B24$

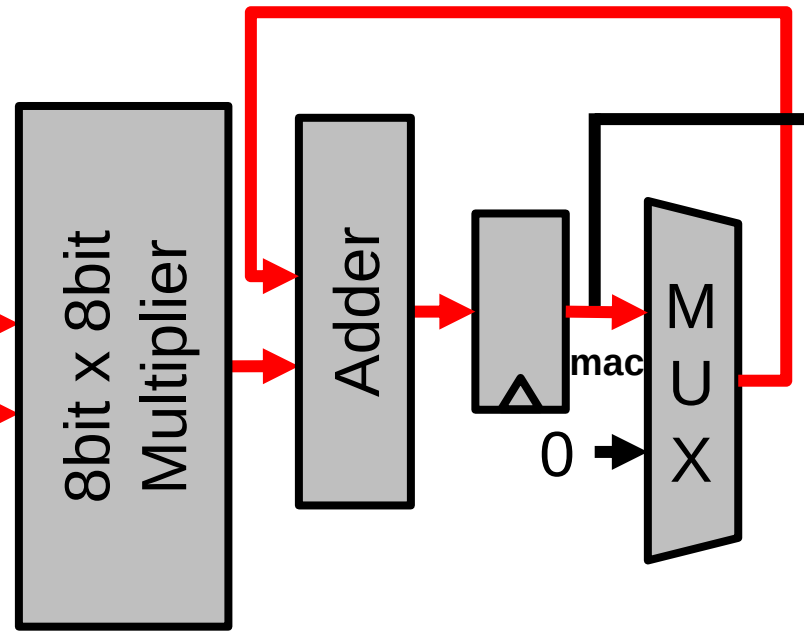

< C : 6 x 6 Matrix >

C0	C1	C2	C3	C4	C5
C6	C7	C8	C9	C10	C11
C12	C13	C14	C15	C16	C17
C18	C19	C20	C21	C21	C23
C24	C25	C26	C27	C28	C29
C30	C31	C32	C33	C34	C35

Cycle 5

VLSI Signal Processing Laboratory

Matrix Multiplication Controller

< A : 6 x 6 Matrix >

A0	A1	A2	A3	A4	A5
A6	A7	A8	A9	A10	A11
A12	A13	A14	A15	A16	A17
A18	A19	A20	A21	A22	A23
A24	A25	A26	A27	A28	A29
A30	A31	A32	A33	A34	A35

< B : 6 x 6 Matrix >

B0	B1	B2	B3	B4	B5
B6	B7	B8	B9	B10	B11
B12	B13	B14	B15	B16	B17
B18	B19	B20	B21	B22	B23
B24	B25	B26	B27	B28	B29
B30	B31	B32	B33	B34	B35

mac : $A0 \times B0 + \cdots + A5 \times B30$

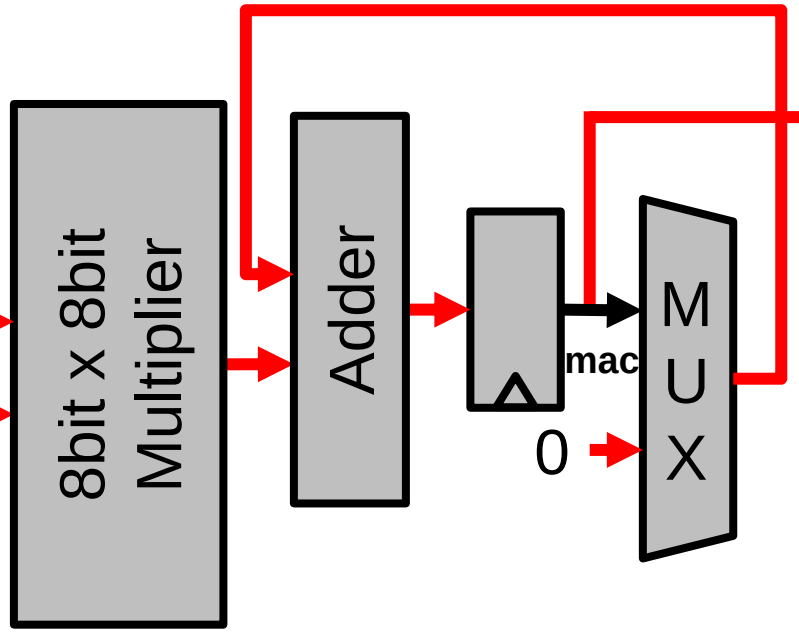

< C : 6 x 6 Matrix >

C0	C1	C2	C3	C4	C5
C6	C7	C8	C9	C10	C11
C12	C13	C14	C15	C16	C17
C18	C19	C20	C21	C21	C23
C24	C25	C26	C27	C28	C29
C30	C31	C32	C33	C34	C35

Cycle 6

VLSI Signal Processing Laboratory

Matrix Multiplication Controller

< A : 6 x 6 Matrix >

A0	A1	A2	A3	A4	A5
A6	A7	A8	A9	A10	A11
A12	A13	A14	A15	A16	A17
A18	A19	A20	A21	A22	A23
A24	A25	A26	A27	A28	A29
A30	A31	A32	A33	A34	A35

< B : 6 x 6 Matrix >

B0	B1	B2	B3	B4	B5
B6	B7	B8	B9	B10	B11
B12	B13	B14	B15	B16	B17
B18	B19	B20	B21	B22	B23
B24	B25	B26	B27	B28	B29
B30	B31	B32	B33	B34	B35

mac : $A0 \times B1$

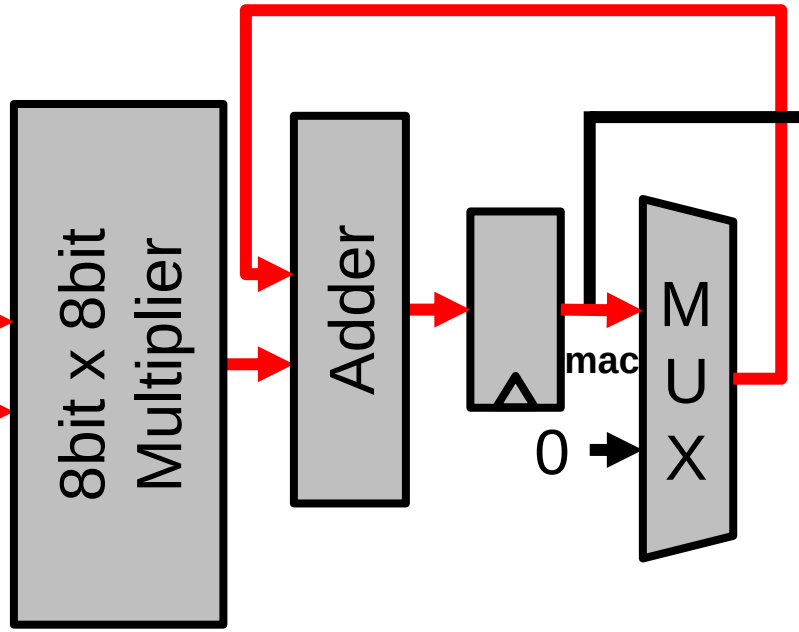

< C : 6 x 6 Matrix >

C0	C1	C2	C3	C4	C5
C6	C7	C8	C9	C10	C11
C12	C13	C14	C15	C16	C17
C18	C19	C20	C21	C21	C23
C24	C25	C26	C27	C28	C29
C30	C31	C32	C33	C34	C35

Cycle 7

VLSI Signal Processing Laboratory

Matrix Multiplication Controller

< A : 6 x 6 Matrix >

A0	A1	A2	A3	A4	A5
A6	A7	A8	A9	A10	A11
A12	A13	A14	A15	A16	A17
A18	A19	A20	A21	[illegible]	A23
A24	A25	A26	[illegible]	[illegible]	A29
A30	A31	A32	[illegible]	[illegible]	A35

Finish

< B : [illegible] atrix >

B0	[illegible]	[illegible]	B3	B4	B5
B6	[illegible]	B8	B9	B10	B11
B12	[illegible]	B14	B15	B16	B17
B18	B19	B20	B21	B22	B23
B24	B25	B26	B27	B28	B29
B30	B31	B32	B33	B34	B35

mac : $A30 \times B5 + \cdots + A35 \times B35$

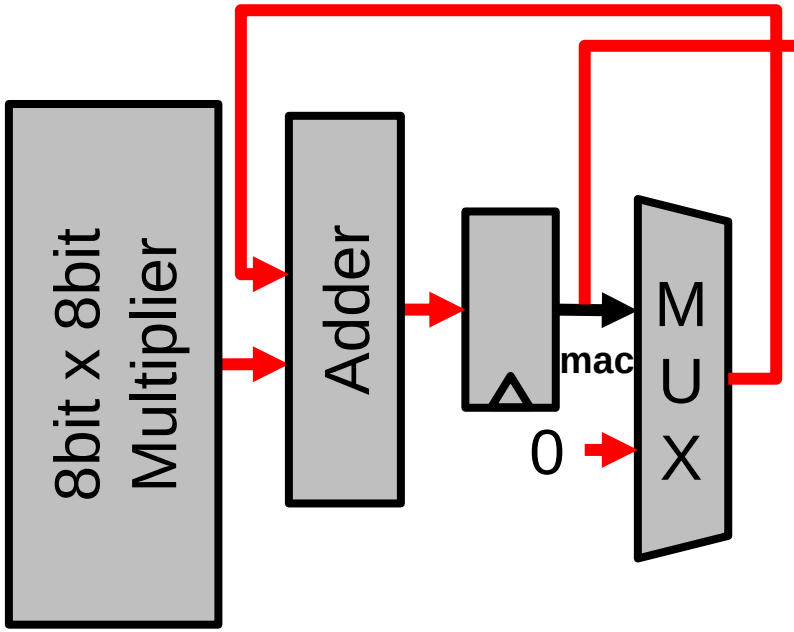

< C : 6 x 6 Matrix >

C0	C1	C2	C3	C4	C5
C6	C7	C8	C9	C10	C11
C12	C13	C14	C15	C16	C17
C18	C19	C20	C21	C21	C23
C24	C25	C26	C27	C28	C29
C30	C31	C32	C33	C34	C35

Cycle 216

VLSI Signal Processing Laboratory

Increasing Throughput

How to increase throughput?

< A : 6 x 6 Matrix >

$A_{1,1}$	$A_{1,2}$	$A_{1,3}$	$A_{1,4}$	$A_{1,5}$	$A_{1,6}$
$A_{2,1}$	$A_{2,2}$	$A_{2,3}$	$A_{2,4}$	$A_{2,5}$	$A_{2,6}$
$A_{3,1}$	$A_{3,2}$	$A_{3,3}$	$A_{3,4}$	$A_{3,5}$	$A_{3,6}$
$A_{4,1}$	$A_{4,2}$	$A_{4,3}$	$A_{4,4}$	$A_{4,5}$	$A_{4,6}$
$A_{5,1}$	$A_{5,2}$	$A_{5,3}$	$A_{5,4}$	$A_{5,5}$	$A_{5,6}$
$A_{6,1}$	$A_{6,2}$	$A_{6,3}$	$A_{6,4}$	$A_{6,5}$	$A_{6,6}$

< B : 6 x 6 Matrix >

$B_{1,1}$	$B_{1,2}$	$B_{1,3}$	$B_{1,4}$	$B_{1,5}$	$B_{1,6}$
$B_{2,1}$	$B_{2,2}$	$B_{2,3}$	$B_{2,4}$	$B_{2,5}$	$B_{2,6}$
$B_{3,1}$	$B_{3,2}$	$B_{3,3}$	$B_{3,4}$	$B_{3,5}$	$B_{3,6}$
$B_{4,1}$	$B_{4,2}$	$B_{4,3}$	$B_{4,4}$	$B_{4,5}$	$B_{4,6}$
$B_{5,1}$	$B_{5,2}$	$B_{5,3}$	$B_{5,4}$	$B_{5,5}$	$B_{5,6}$
$B_{6,1}$	$B_{6,2}$	$B_{6,3}$	$B_{6,4}$	$B_{6,5}$	$B_{6,6}$

=

< C : 6 x 6 Matrix >

$C_{1,1}$	$C_{1,2}$	$C_{1,3}$	$C_{1,4}$	$C_{1,5}$	$C_{1,6}$
$C_{2,1}$	$C_{2,2}$	$C_{2,3}$	$C_{2,4}$	$C_{2,5}$	$C_{2,6}$
$C_{3,1}$	$C_{3,2}$	$C_{3,3}$	$C_{3,4}$	$C_{3,5}$	$C_{3,6}$
$C_{4,1}$	$C_{4,2}$	$C_{4,3}$	$C_{4,4}$	$C_{4,5}$	$C_{4,6}$
$C_{5,1}$	$C_{5,2}$	$C_{5,3}$	$C_{5,4}$	$C_{5,5}$	$C_{5,6}$
$C_{6,1}$	$C_{6,2}$	$C_{6,3}$	$C_{6,4}$	$C_{6,5}$	$C_{6,6}$

12 multiplications & accumulation for processing $C_{1,1}$, $C_{1,2}$

6 cycles of computation with two computation units

VLSI Signal Processing Laboratory

Increasing Throughput

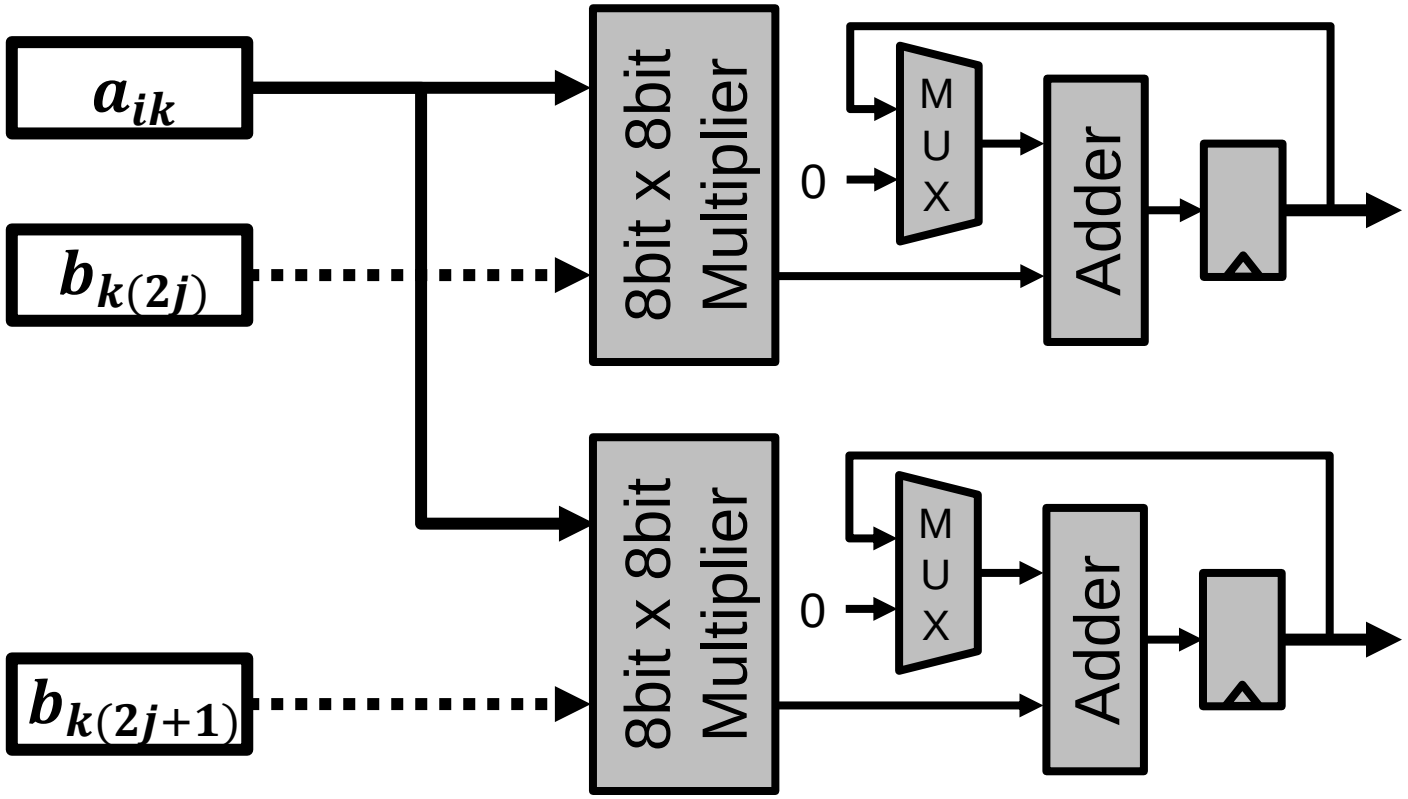

$$c_{i(2j)} = \sum_{k=1}^{n} a_{ik} \times b_{k(2j)}$$

$$c_{i(2j+1)} = \sum_{k=1}^{n} a_{ik} \times b_{k(2j+1)}$$

Multiple MAC units process Matrix Multiplication in parallel

VLSI Signal Processing Laboratory

Matrix Multiplication Controller

Storing Matrix Data Format

< A: 6 x 6 Matrix >

A0	A1	A2	A3	A4	A5
A6	A7	A8	A9	A10	A11
A12	A13	A14	A15	A16	A17
A18	A19	A20	A21	A22	A23
A24	A25	A26	A27	A28	A29
A30	A31	A32	A33	A34	A35

< B: 6 x 6 Matrix >

B0	B1	B2	B3	B4	B5
B6	B7	B8	B9	B10	B11
B12	B13	B14	B15	B16	B17
B18	B19	B20	B21	B22	B23
B24	B25	B26	B27	B28	B29
B30	B31	B32	B33	B34	B35

address *SRAM* (Row-wise Data Format)

address	SRAM
0	A0
1	A1
2	A2
3	A3
4	A4
5	A5
6	A6
7	A7
⋮	A8
	A9
	⋮

address	SRAM
0	B0 B1
1	B2, B3
2	B4, B5
3	B6, B7
4	B8, B9
5	B10, B11
6	B12, B13
7	B14, B15
⋮	B16, B17
	B18, B19
	⋮

VLSI Signal Processing Laboratory

Matrix Multiplication Controller

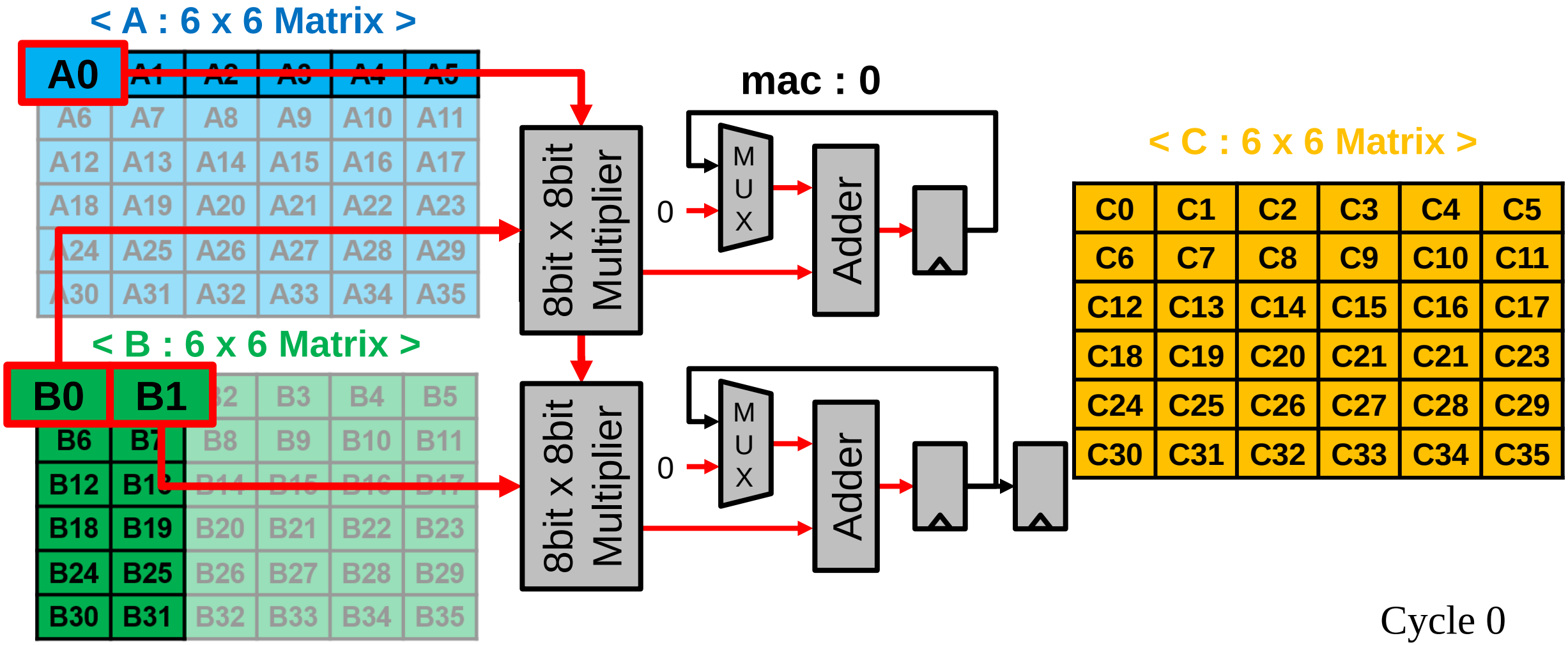

Cycle 0

VLSI Signal Processing Laboratory

Matrix Multiplication Controller

Storing Matrix Data Format

< A: 6 x 6 Matrix >

A0	A1	A2	A3	A4	A5
A6	A7	A8	A9	A10	A11
A12	A13	A14	A15	A16	A17
A18	A19	A20	A21	A22	A23
A24	A25	A26	A27	A28	A29
A30	A31	A32	A33	A34	A35

< B: 6 x 6 Matrix >

B0	B1	B2	B3	B4	B5
B6	B7	B8	B9	B10	B11
B12	B13	B14	B15	B16	B17
B18	B19	B20	B21	B22	B23
B24	B25	B26	B27	B28	B29
B30	B31	B32	B33	B34	B35

address *SRAM* (Row-wise Data Format)

address	
0	A0
1	A1
2	A2
3	A3
4	A4
5	A5
6	A6
7	A7
⋮	A8
	A9
	⋮

address	
0	B0, B1
1	B2, B3
2	B4, B5
3	B6 B7
4	B8, B9
5	B10, B11
6	B12, B13
7	B14, B15
⋮	B16, B17
	B18, B19
	⋮

VLSI Signal Processing Laboratory

Matrix Multiplication Controller

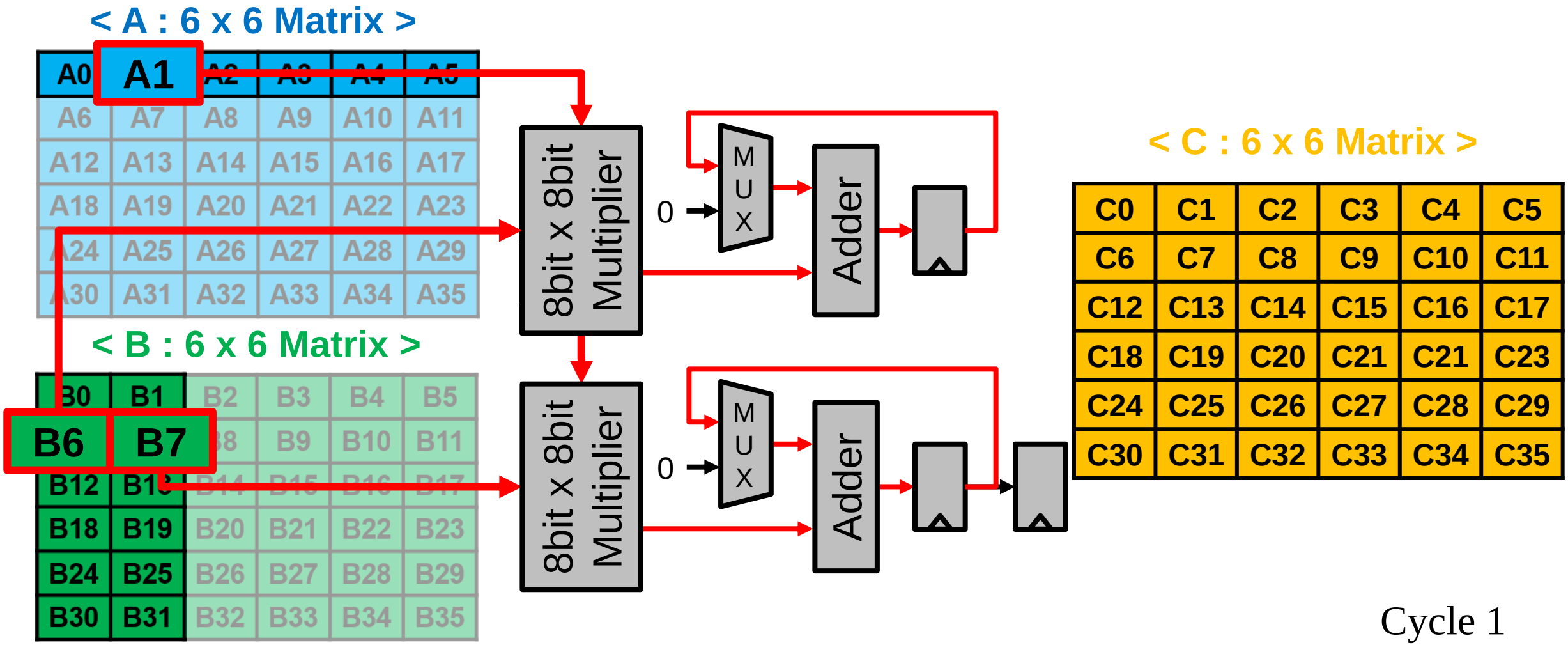

Cycle 1

VLSI Signal Processing Laboratory

Matrix Multiplication Controller

Storing Matrix Data Format

< A: 6 x 6 Matrix >

A0	A1	A2	A3	A4	A5
A6	A7	A8	A9	A10	A11
A12	A13	A14	A15	A16	A17
A18	A19	A20	A21	A22	A23
A24	A25	A26	A27	A28	A29
A30	A31	A32	A33	A34	A35

< B: 6 x 6 Matrix >

B0	B1	B2	B3	B4	B5
B6	B7	B8	B9	B10	B11
B12	B13	B14	B15	B16	B17
B18	B19	B20	B21	B22	B23
B24	B25	B26	B27	B28	B29
B30	B31	B32	B33	B34	B35

address *SRAM* (Row-wise Data Format)

address	
0	A0
1	A1
2	A2
3	A3
4	A4
5	A5
6	A6
7	A7
⋮	A8
	A9
	⋮

address	
0	B0, B1
1	B2, B3
2	B4, B5
3	B6, B7
4	B8, B9
5	B10, B11
6	B12 B13
7	B14, B15
⋮	B16, B17
	B18, B19
	⋮

VLSI Signal Processing Laboratory

Matrix Multiplication Controller

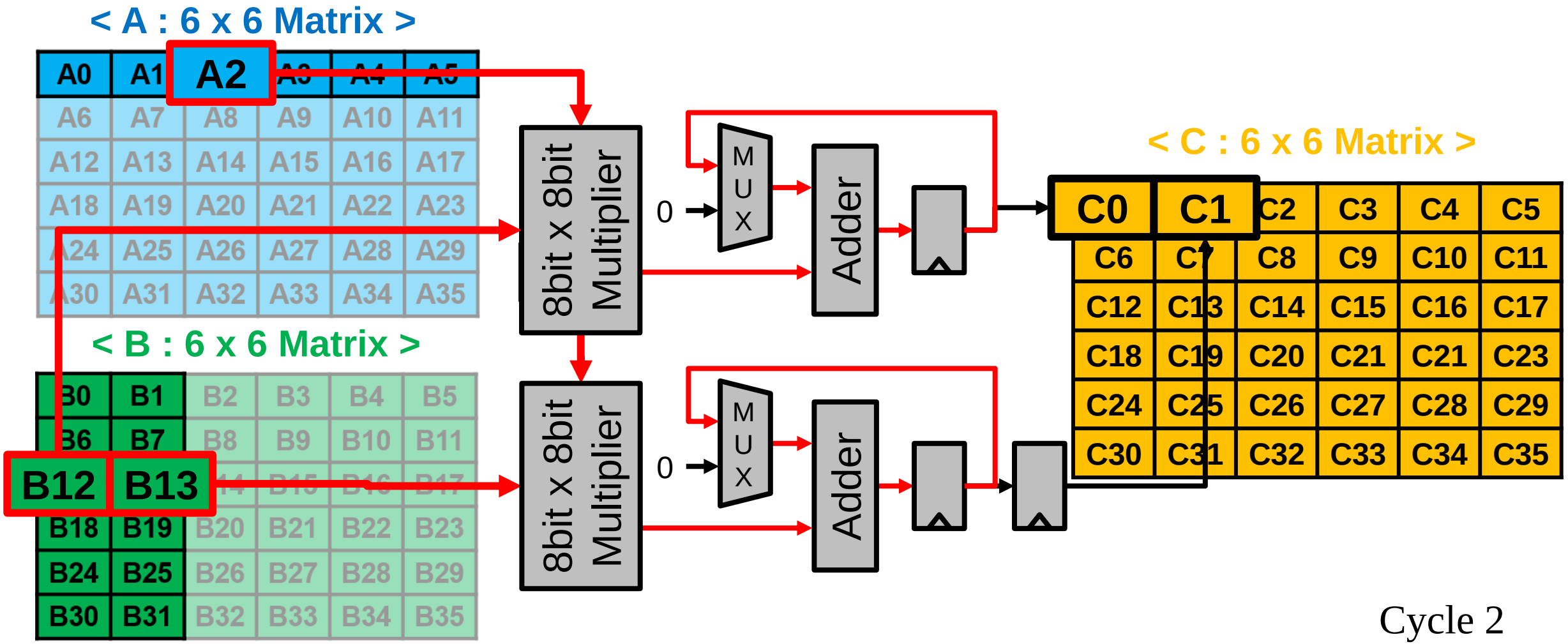

Cycle 2

VLSI Signal Processing Laboratory

Matrix Multiplication Controller

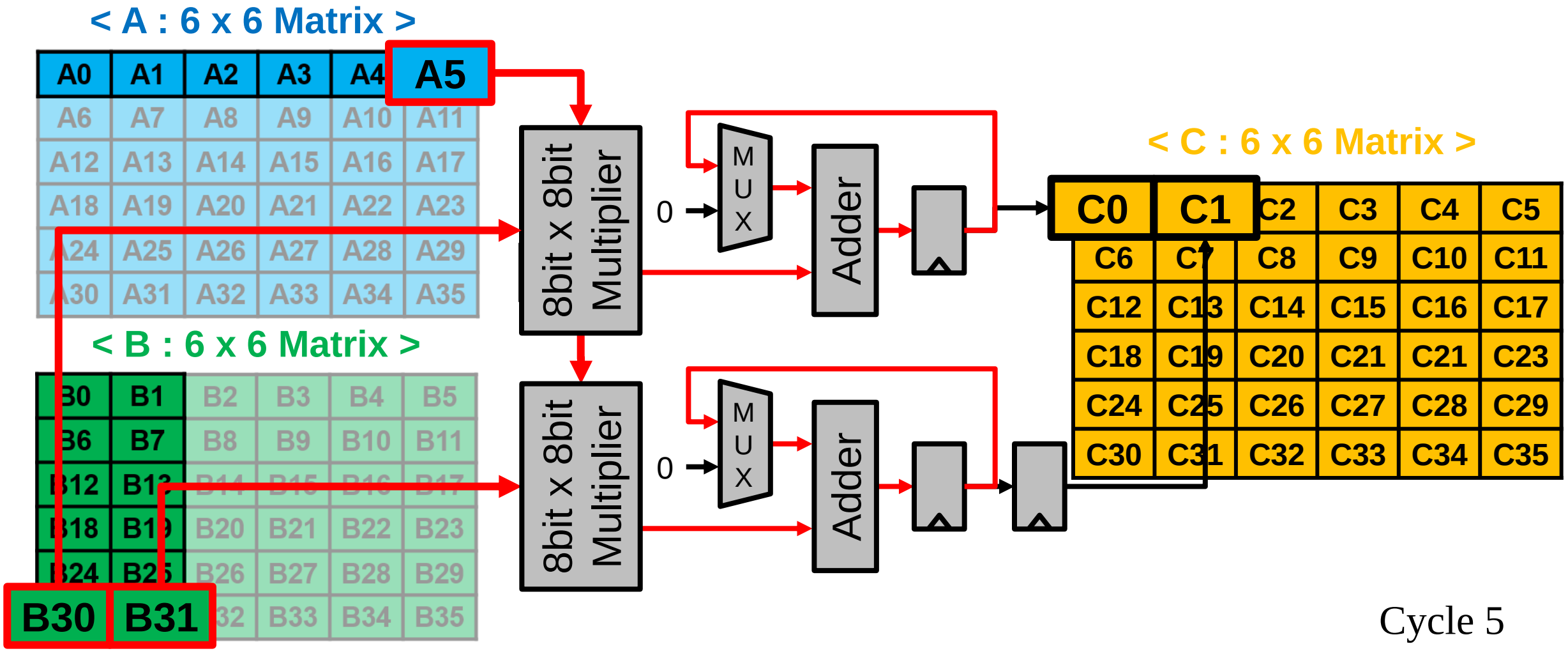

Cycle 5

VLSI Signal Processing Laboratory

Matrix Multiplication Controller

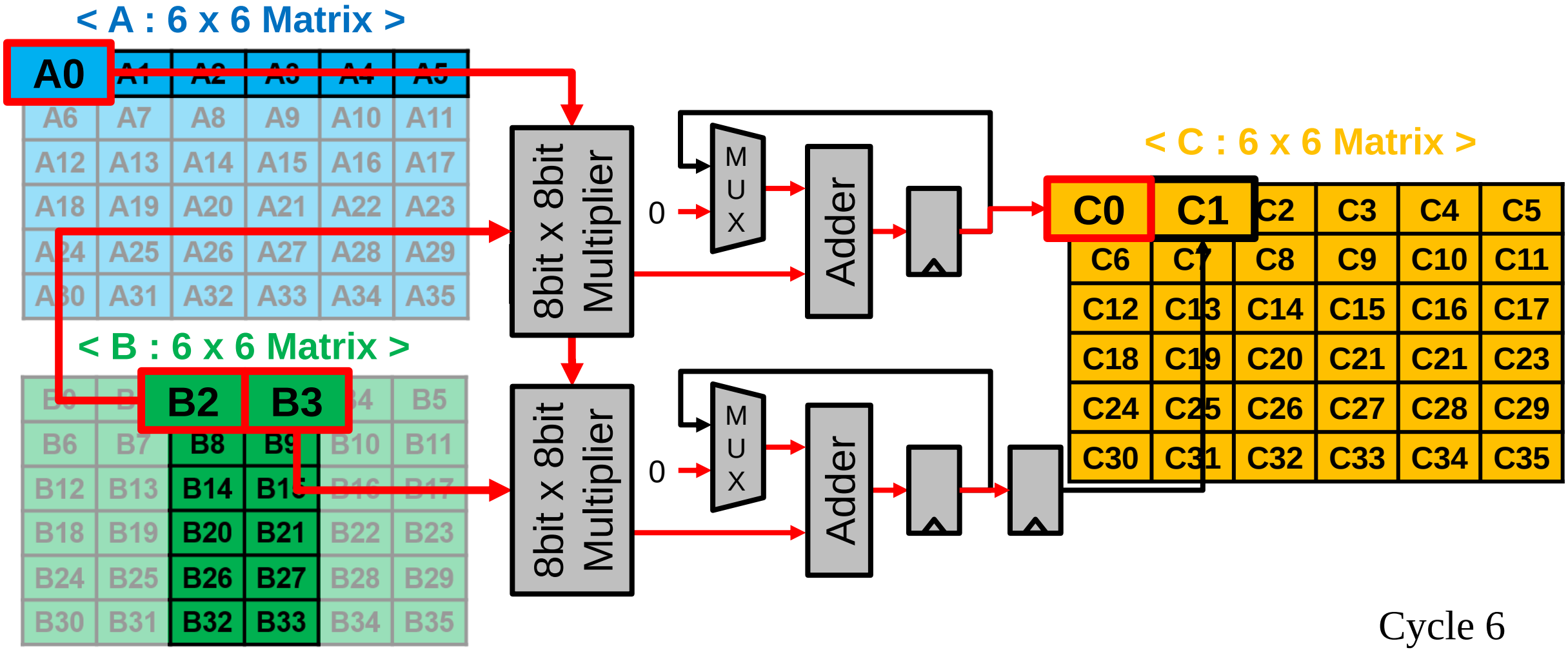

Cycle 6

VLSI Signal Processing Laboratory

Matrix Multiplication Controller

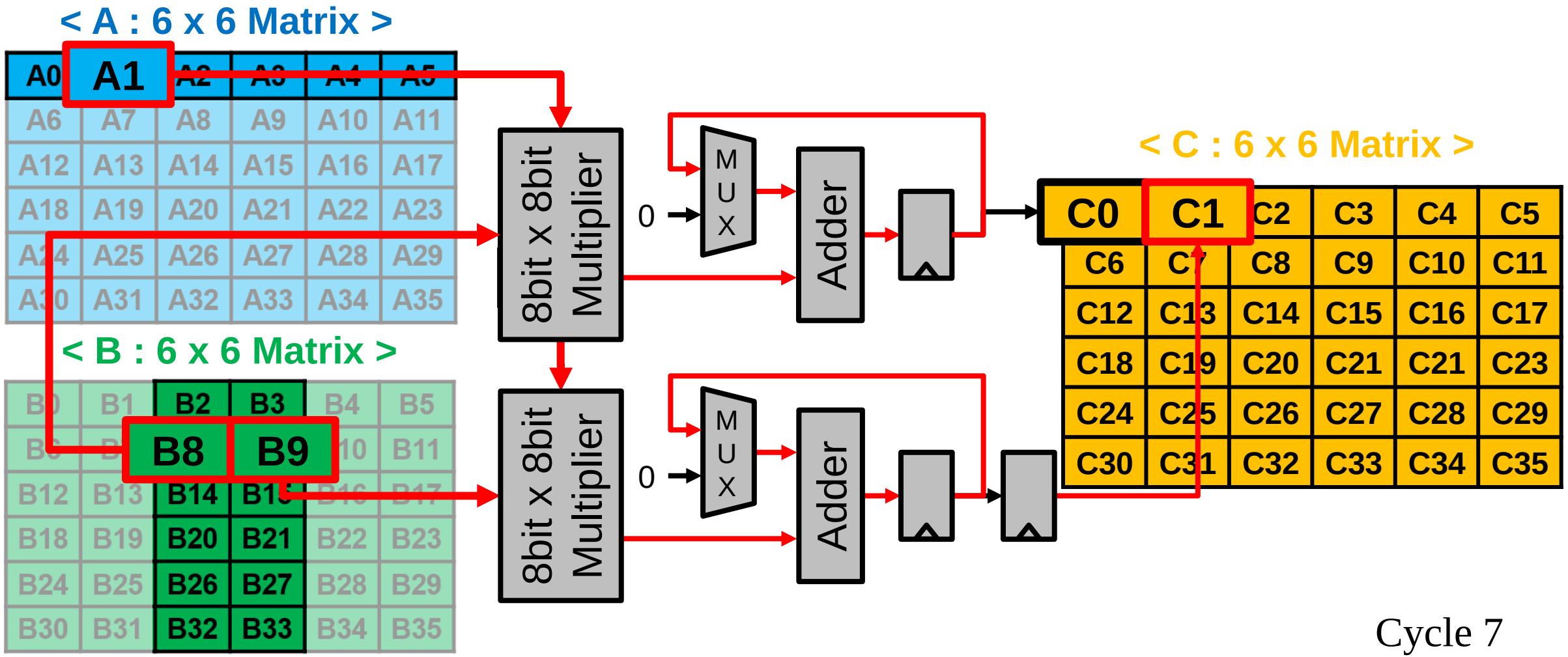

Cycle 7

VLSI Signal Processing Laboratory

Matrix Multiplication Controller

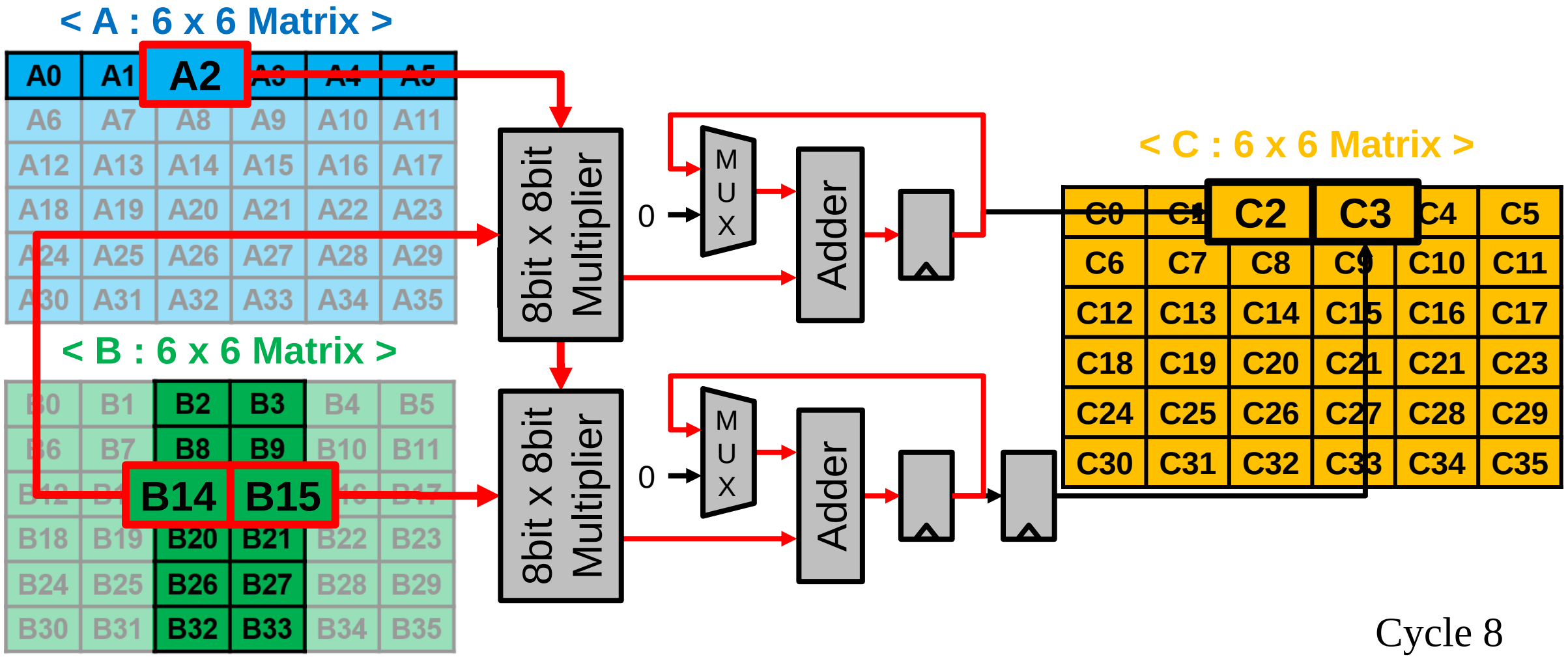

Cycle 8

VLSI Signal Processing Laboratory

Matrix Multiplication Controller

< A : 6 x 6 Matrix >

A0	A1	A2	A3	A4	A5
A6	A7	A8	A9	A10	A11
A12	A13	A14	A15	A16	A17
A18	A19	A20	A21	[illegible]	A23
A24	A25	A26	[illegible]	[illegible]	A29
A30	A31	A32	[illegible]	[illegible]	A35

< B : [illegible] atrix >

B0	[illegible]	[illegible]	B3	B4	B5
B6	[illegible]	B8	B9	B10	B11
B12	[illegible]	B14	B15	B16	B17
B18	B19	B20	B21	B22	B23
B24	B25	B26	B27	B28	B29
B30	B31	B32	B33	B34	B35

Finish

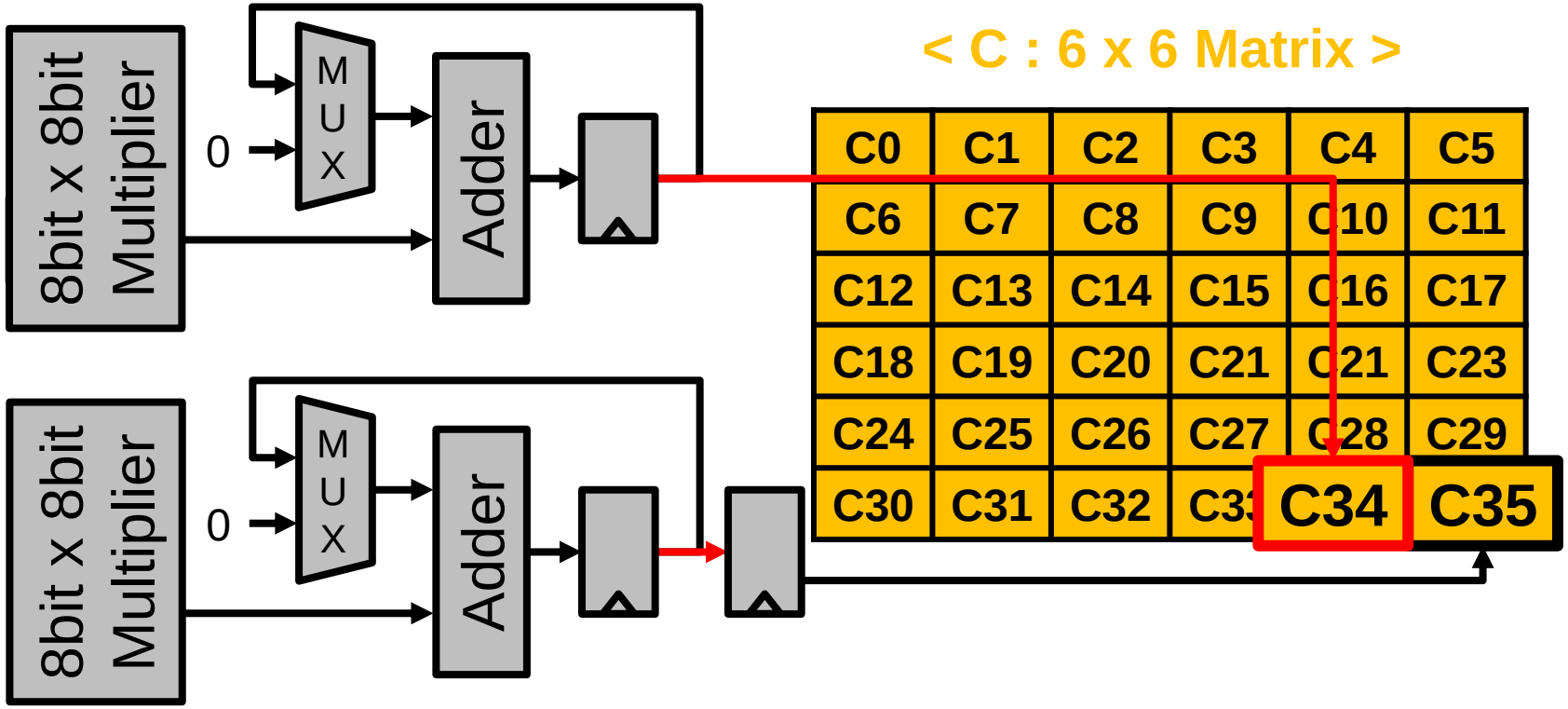

Cycle 108

VLSI Signal Processing Laboratory

Matrix Multiplication Controller

< A : 6 x 6 Matrix >

A0	A1	A2	A3	A4	A5
A6	A7	A8	A9	A10	A11
A12	A13	A14	A15	A16	A17
A18	A19	A20	A21	[illegible]	A23
A24	A25	A26	[illegible]	[illegible]	A29
A30	A31	A32	[illegible]	[illegible]	A35

< B : [illegible] atrix >

B0	[illegible]	[illegible]	B3	B4	B5
B6	[illegible]	B8	B9	B10	B11
B12	[illegible]	B14	B15	B16	B17
B18	B19	B20	B21	B22	B23
B24	B25	B26	B27	B28	B29
B30	B31	B32	B33	B34	B35

Finish

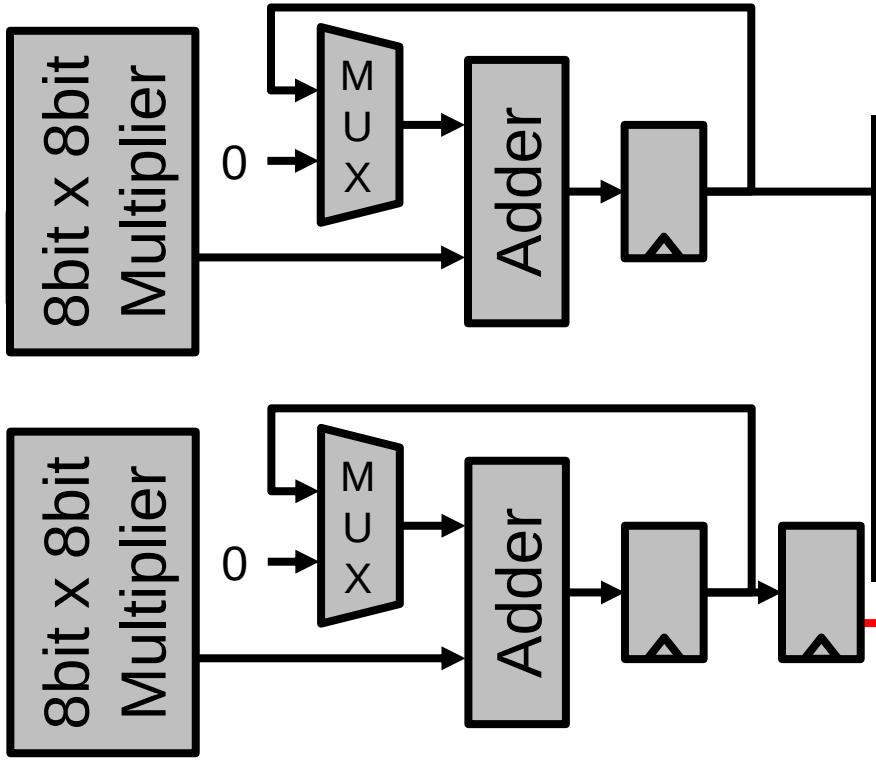

< C : 6 x 6 Matrix >

C0	C1	C2	C3	C4	C5
C6	C7	C8	C9	C10	C11
C12	C13	C14	C15	C16	C17
C18	C19	C20	C21	C21	C23
C24	C25	C26	C27	C28	C29
C30	C31	C32	C33	C34	C35

Cycle 109

VLSI Signal Processing Laboratory

Project 1

Designing
32x32 Matrix Multiplication Controller with four Computation Unit

VLSI Signal Processing Laboratory

Increasing Throughput

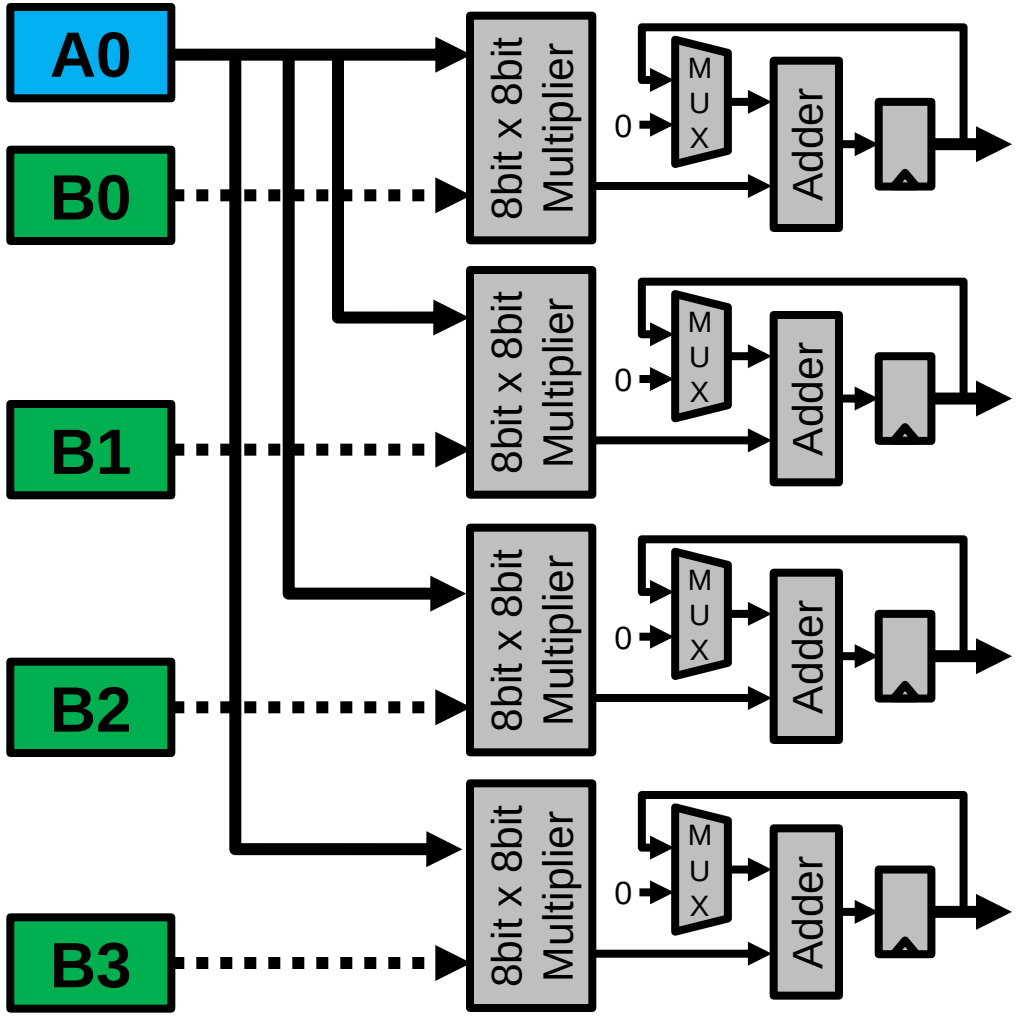

There are 4 computation units for matrix multiplication !

→ Improvement of throughput

VLSI Signal Processing Laboratory

Matrix Multiplier Controller Specifications

(Row : 32, Column : 32, Input Data : 8 bit, Output Data : 21 bit)

(Row-wise Input) (Four computation unit, 8bit x 8bit unsigned mac) (Row-wise Output)

Matrix Multiplier Controller Specifications

(Row : 32, Column : 32, Input Data : 8 bit, Output Data : 21 bit)

Design your own Matrix Multiplication Controller

Row : 32, Column : 32, Input Data : 8 bit, Output Data : 21 bit

Files Given ..

1. **Inputs / Output vector files**
2. **SRAM Module Verilog files (rflp1024x8mx2.v, rflp256x32mx2.v, rflp1024x21mx2.v)**
3. **Stimulus file**

Project 1: Waveform

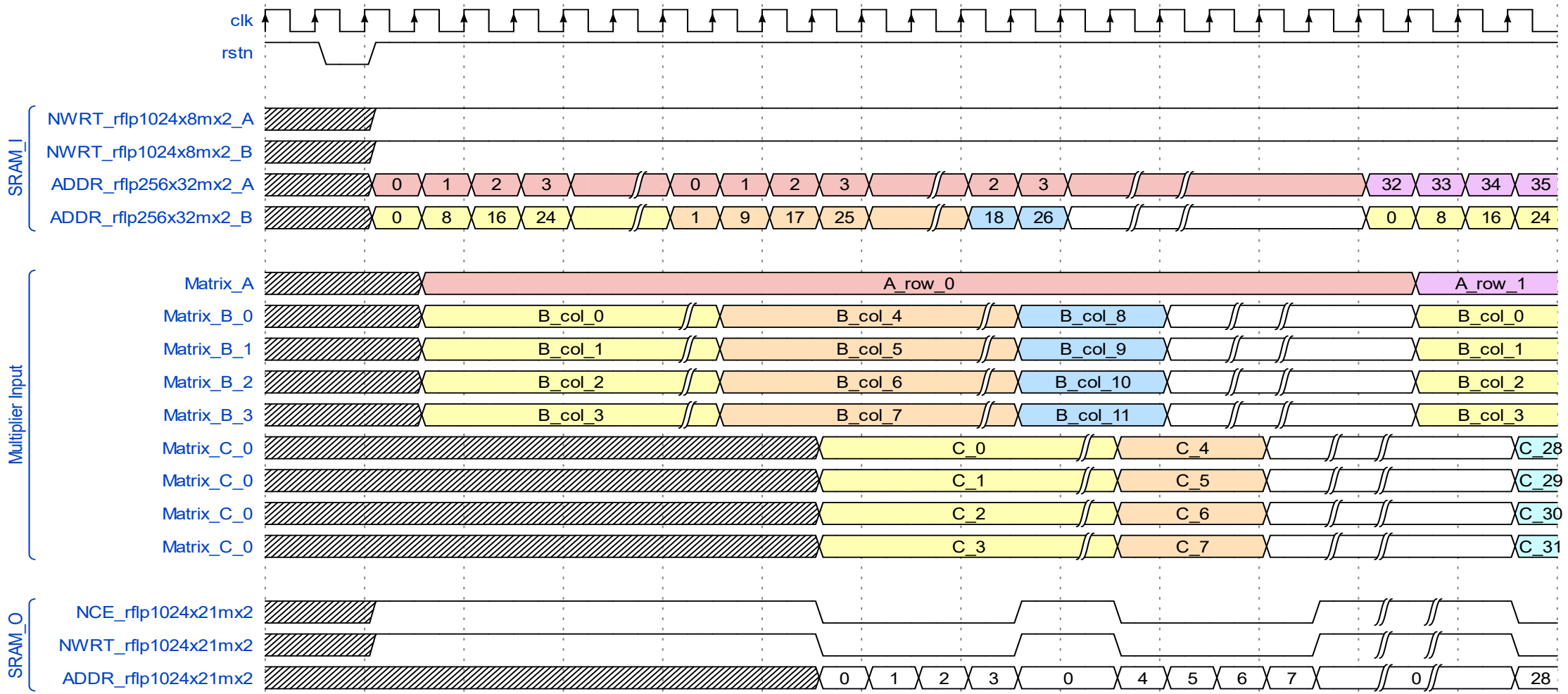

Project 1: Waveform

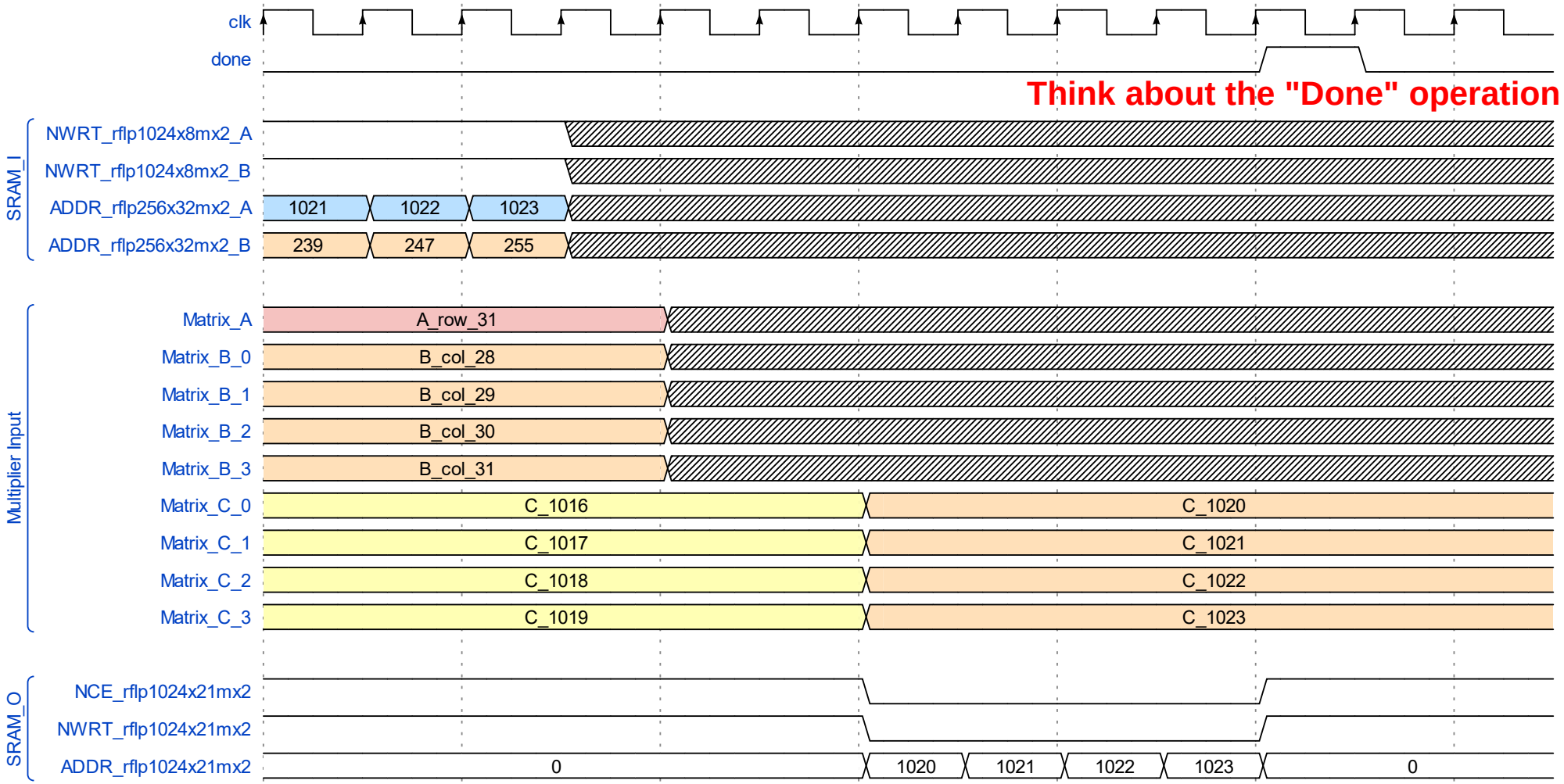

rflp1024x8mx2.v SRAM for Input A

- 1 port SRAM(Read or Write)
- Bit Width
  - Input
    - Row Address : 8 bit
    - Column Address : 2 bit
    - Data In : 8 bit
  - Output
    - Data Out : 8 bit
  - Control Signal
    - NWRT : 1bit (0 → Write, 1 → Read)
    - NCE : 1bit (0 → Enable, 1 → Disable)
  - Positive edge triggered(CLK)

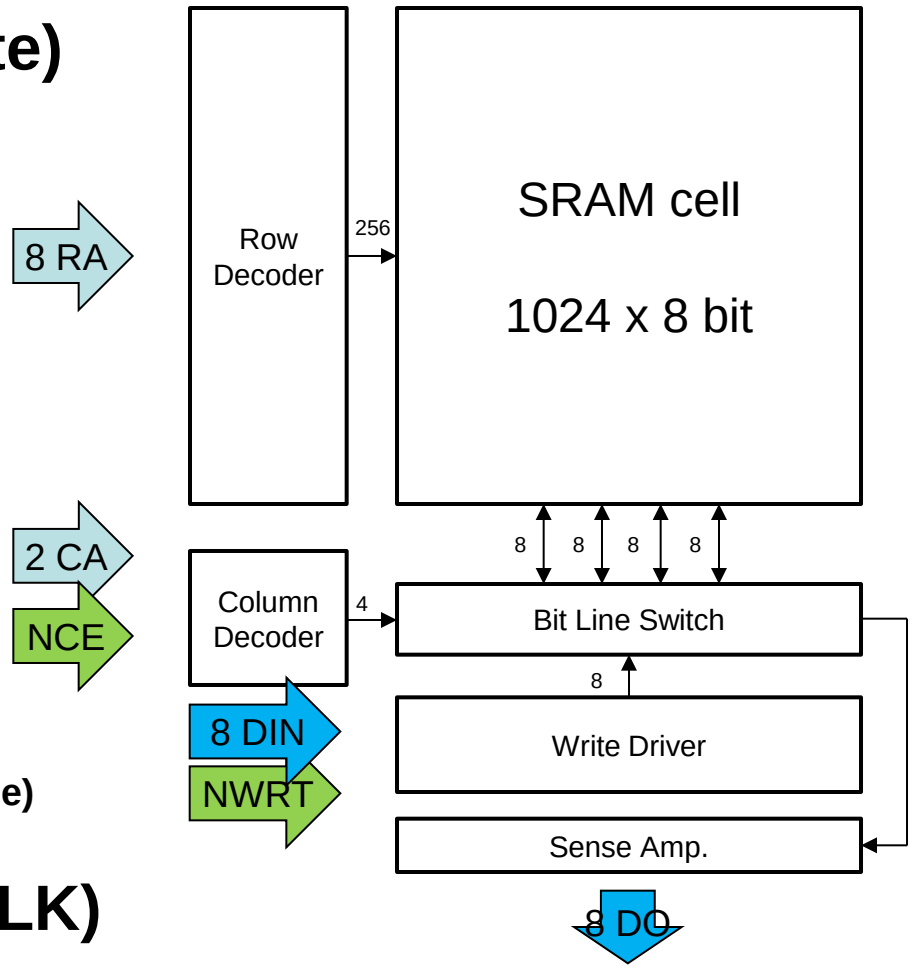

rflp256x32mx2.v SRAM for Input B

- 1 port SRAM(Read or Write)
- Bit Width
  - Input
    - Row Address : 6 bit
    - Column Address : 2 bit
    - Data In : 32 bit
  - Output
    - Data Out : 32 bit
  - Control Signal
    - NWRT : 1bit (0 → Write, 1 → Read)
    - NCE : 1bit (0 → Enable, 1 → Disable)
  - Positive edge triggered(CLK)

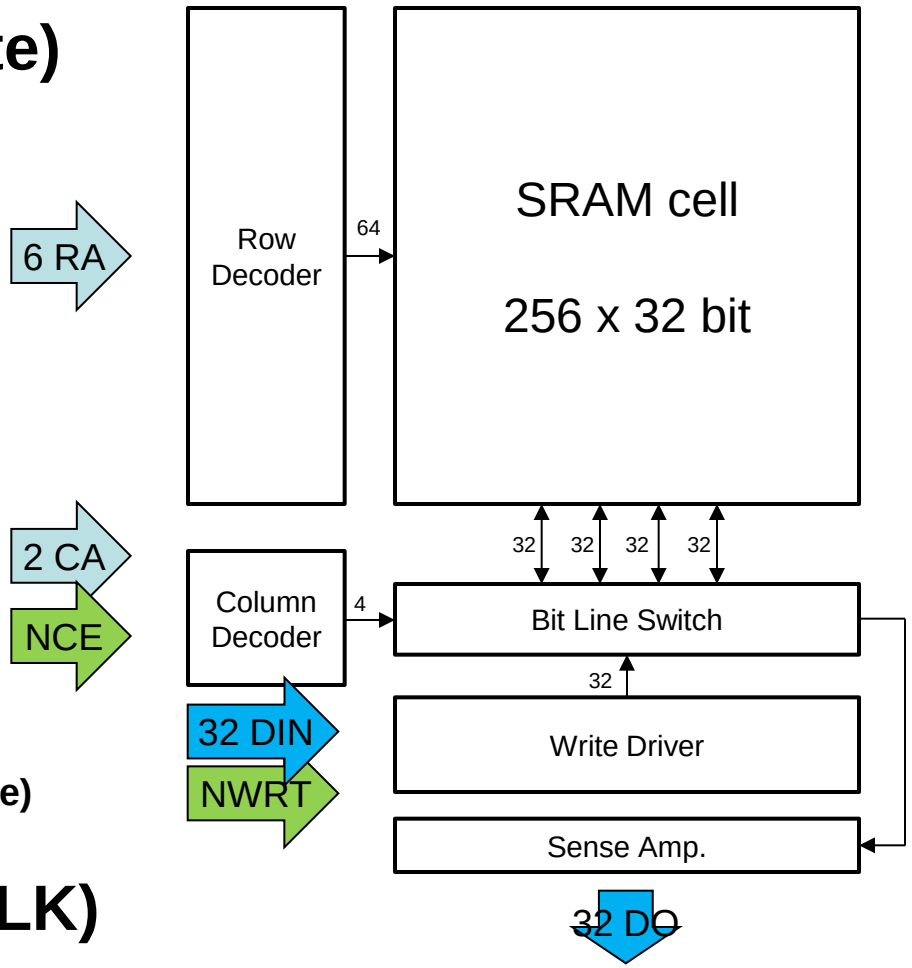

rflp1024x21mx2.v SRAM for Input C

- 1 port SRAM(Read or Write)
- Bit Width
  - Input
    - Row Address : 8 bit
    - Column Address : 2 bit
    - Data In : 21 bit
  - Output
    - Data Out : 21 bit
  - Control Signal
    - NWRT : 1bit (0 → Write, 1 → Read)
    - NCE : 1bit (0 → Enable, 1 → Disable)
- Positive edge triggered(CLK)

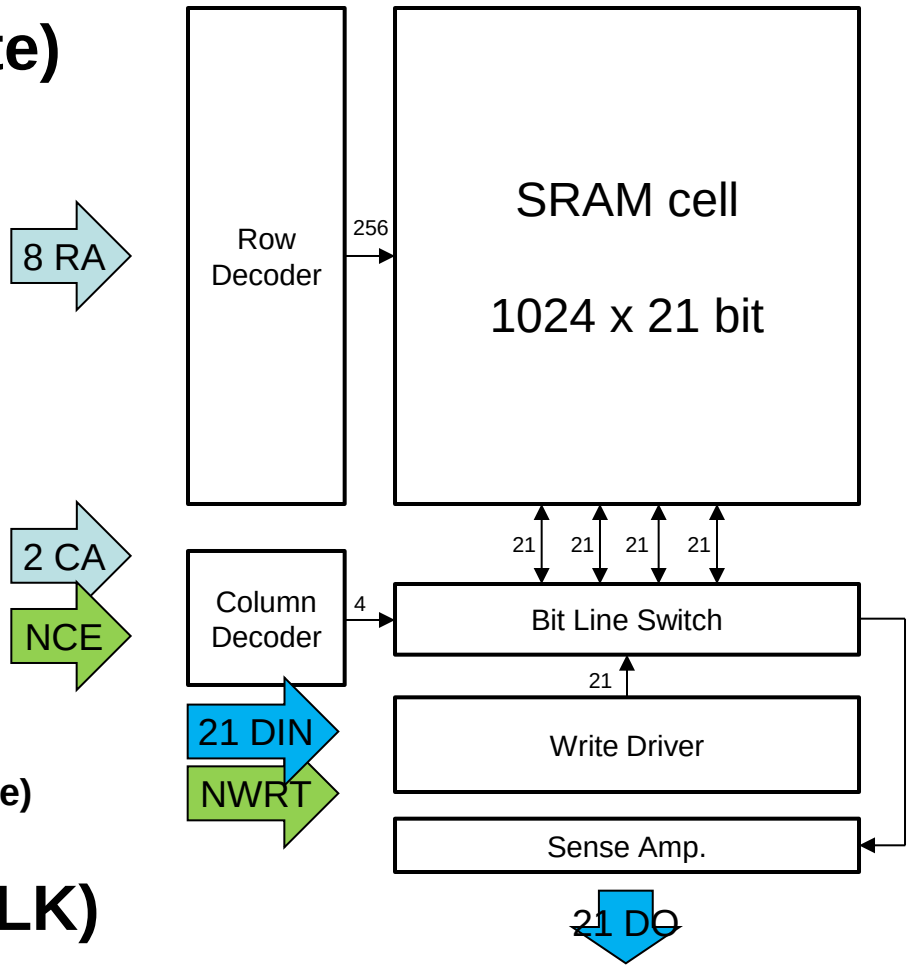

Top Module Configuration

Testbench

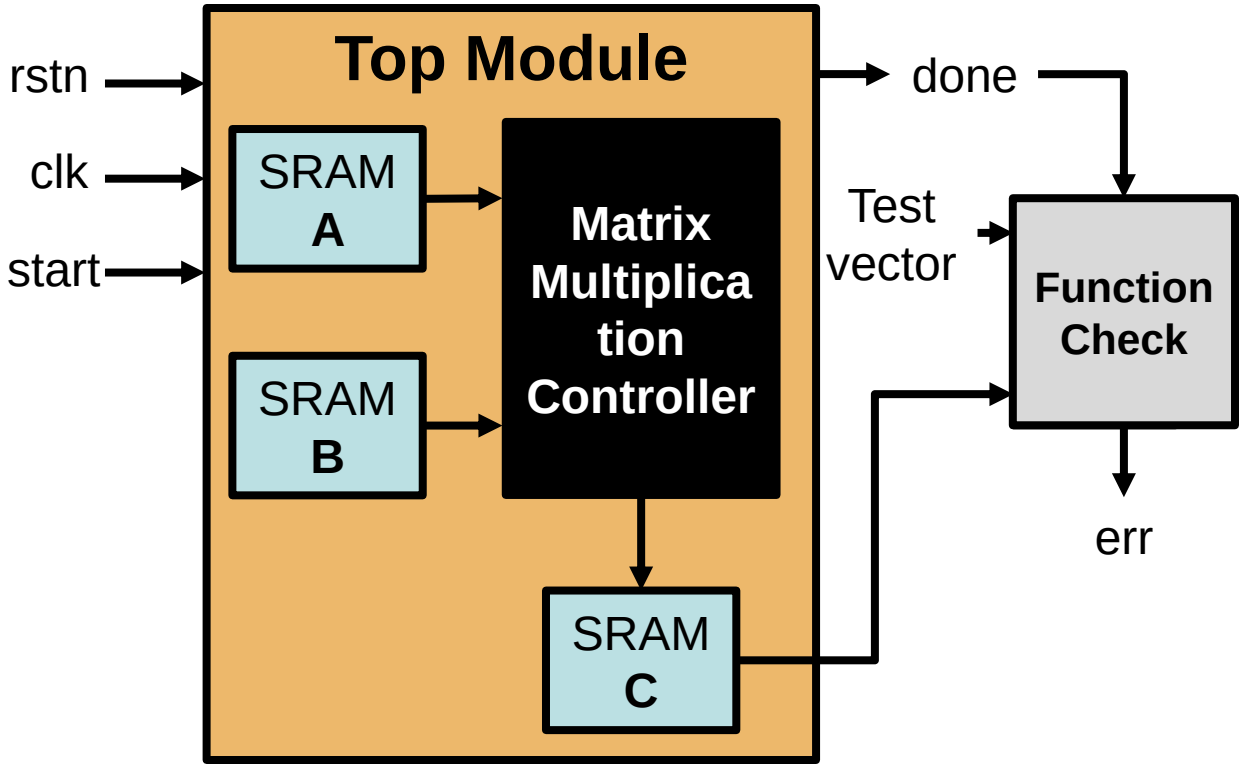

Synthesis

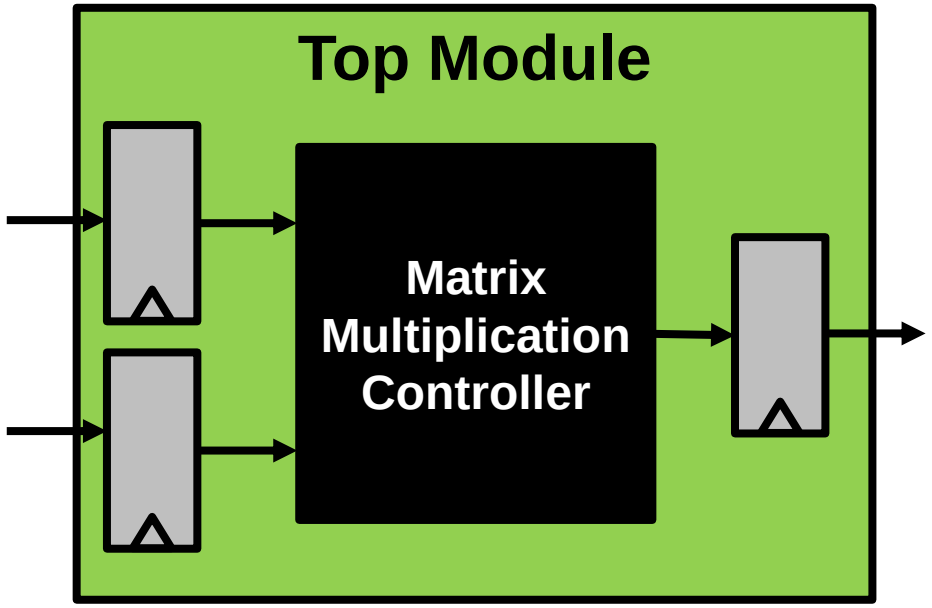

Without SRAM!

VLSI Signal Processing Laboratory

Project #1

- **Check the functionality and synthesis results**
  - **Draw block diagram of your design (Draw yourself)**
  - **Show timing diagrams of your matrix multiplication controller (include “Done” signal)**
  - **Show timing, area, power report & zip the .v files**
  - **Check the critical path delay, area and power**

Project #1

- **Submit result report (No presentation)**
  - **Describe your design in detail and show the above results**
- **Due : May 9th 11:59pm (3 Weeks from Today !)**

Title of the Mail : 2025_VLSI_Project01_이름_학번

Report : Report_ Project01 _이름_학번.pdf

Zip file : Verilog_ Project01 _이름_학번.zip

VLSI Signal Processing Laboratory