Mach Zender Interferometer

Namit Anand

1111033

Integrated M.Sc.(2011-2016)

Under the guidance of

Dr. Ashok Mohapatra

National Institute of Science Education and Research

Bhubaneswar

Contents

1 What is Interferometry ? 5

2 Mach-Zender Interferometer 6
2.1 How it works 7
2.2 Energy conservation 7

3 Beam splitter 8
3.1 Polarizing or non polarizing 8

4 Phenomena of Optical Beats 9
4.1 Beats in sound waves 9
4.2 Back to optics 10

5 Acoustic Optic Modulator(AOM) 10
5.1 Working 11

6 Setting up an AOM 12

7 Alignment of AOM 13
7.1 Testing the photodiode 13
7.2 Testing the RF oscillator 13

8 Observing the beats 15

9 What's next ? 17

CERTIFICATE

This is to certify that the project entitled **"Mach Zender interferometer"** is the bonafide work done by **Namit Anand, National Institute of Science Education and Research, Bhubaneswar**, under my guidance at the National Institute of Science Education and Research, Bhubaneswar. The materials presented in this project has not been submitted for the award of any other degree or diploma.

Place :
Date :

Dr. Ashok Mohapatra
NISER Bhubaneswar

Acknowledgment

I would like to thank Dr. Ashok Mohapatra for his great support during the project that helped me understand a lot about the properties of waves and a lot of quantum mechanics.
I would also like to thank Pratik Kumar Sahu,who worked on the same project with me, Suryanarayan Sahoo, Summer intern and Arup Bhowmick, P.hD student at NISER for intellectual discussions during the entire project. I would also like to thank NISER for such a great opportunity that made this project happen indeed. Finally, I thank my parents and family for always being there to support me. I also thank some of my close friends for their encouragement and support.

Namit Anand
1111033
Physics Department
NISER, Bhubaneswar

1 What is Interferometry ?

We are surrounded by waves all around, be it the living or the non living. Even the description of our physical reality is explained by wave-particle duality. In such a case it is our dire need to understand the nature of waves. Interferometry is just the answer. The **Principle of superposition** is one of the most powerful and most basic principle in all of physics, be it classical or quantum. Interference uses the principle of superposition to superpose two waves in a way so that the resultant has some properties which is informative of the original.

Interference is of two types broadly (based on our perception):

- Constructive i.e. the interference of two or more waves of equal frequency and phase, resulting in their mutual reinforcement and producing a single amplitude equal to the sum of the amplitudes of the individual waves.

- Destructive i.e. the interference of two waves of equal frequency and opposite phase, resulting in their cancellation where the negative displacement of one always coincides with the positive displacement of the other.

Figure 1: Waves interfering on the surface of water

2 Mach-Zender Interferometer

The Mach–Zehnder interferometer is a device used to determine the relative phase shift variations between two collimated beams derived by splitting light(amplitude division) from a single source. The most popular of interferometers is the Michelson-Morley version, which was used in the famous "Ether experiment" in relativity to prove the existence of ether(based on the concept of absolute space proposed by Newton) around us.
The Mach-Zender interferometer is highly customizable and hence has become a popular choice for almost any kind of visualizations.
Mach–Zehnder interferometers are used in electro-optic modulators, electronic devices used in various fibre-optic communications applications. Mach-Zehnder modulators are incorporated in monolithic integrated circuits and offer well-behaved, high-bandwidth electro-optic amplitude and phase responses over a multiple GHz frequency range.
Mach–Zehnder interferometers are also used to study one of the most counter intuitive predictions of quantum mechanics, the phenomenon known as quantum entanglement.

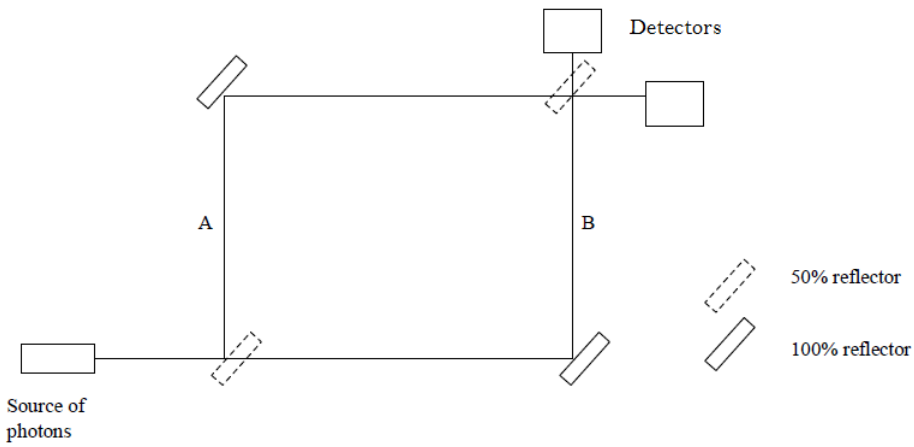

Figure 2: Mach–Zehnder interferometer

2.1 How it works

A collimated beam from the source(say a laser) is split into two beams of equal intensities using a polarizing beam splitter. These two beams say A and B traverse in different directions and are then get reflected by two mirrors then these beams enter a non polarizing beam splitter and then enter two detectors. We have Fresnel's equations for reflection and refraction which tell us about the fraction of light will be reflected and what part transmitted and whether there will be a phase change or not when light encounters a dielectric in its path. These reflection laws can be visualized using that of classical waves traveling on a string. When the waves encounter a denser medium a part gets reflected from this interface and the rest transmitted.

- There will be a 180 degree phase change when light reflects from the front of a mirror surface since the medium behind is optically denser than the initial medium (air generally).
- When it reflects from the back of a mirror there is no phase change since it is going from a denser to a rarer medium.

2.2 Energy conservation

Initially we assume that there is no phase shift on reflection or transmission. The phase on reaching the second beamsplitter is simply the path length divided by the wavelength, multiplied by 2π. On recombination at the beamsplitter, if the two paths are of equal length, then the phases are equal. So which path shows constructive interference, the path towards A or B? The answer is unresolved. In fact, the entire situation is symmetrical with respect to the two detectors and should one path allow constructive interference, so will the other. Similarly if one path suffers destructive interference, so does the other. This violates conservation of energy.

Here is when the concepts of Fresnel's equations as mentioned above come into play and we give the problem is resolved fairly simply.

In the absence of **absorption** by beamsplitters and lenses, regardless of the width of the optical components, one can say just on the basis of **Energy Conservation** that the phase difference

between the two light beams has to be $\frac{\pi}{2}$ no matter what one may do.

3 Beam splitter

How is a beamsplitter actually made?

Usually it is a piece of glass with a dielectric or metal coating on the front surface. Light striking it from the front has a 50 per cent (or any other value, depending on the coating) chance of being reflected, and a 50 per cent chance of being transmitted. In the case of a dielectric (non-conducting and non-magnetic) a reflection does indeed induce a phase shift of π, whereas a transmitted photon picks up no phase shift. However, the key to the problem lies in what happens to a photon approaching the beamsplitter from behind. There it first enters the glass (ignoring the small chance of reflection off the air–glass interface) and has a 50 per cent chance of reflecting off the dielectric coating whilst within the glass. Here is the crux of the matter—that reflection does not induce a phase change. This gives a total explanation of the phenomenon mentioned above.

3.1 Polarizing or non polarizing

A polarizing beam splitter splits the amplitude equally into two perpendicular directions each having mutually perpendicular polarizations.

4 Phenomena of Optical Beats

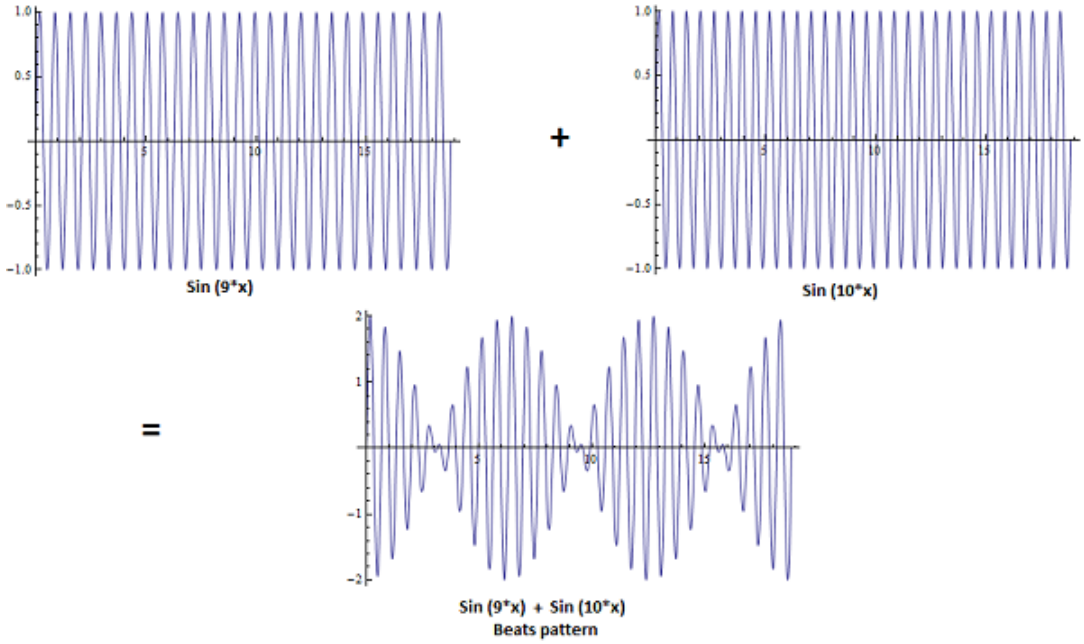

Figure 3: Beats as an interference of slightly different frequencies

4.1 Beats in sound waves

In acoustics beats is the interference of sounds of slightly different frequencies. An easy visualization is provided by the image above. Beats can be easily recognized with tuning instruments or with say two people playing a flute. As there is little difference in the frequencies one can hear the volume going up and down since constructive and destructive interference continually happens. This is known as a beat.

Mathematically:

One can see mathematically what happens when we superimpose two sine or cosine waves:

$$\cos(2\pi\nu_1 t)+\cos(2\pi\nu_2 t) = 2\cos(\frac{2\pi\nu_1+\nu_2}{2}t)*\cos(\frac{2\pi\nu_1-\nu_2}{2}t) \quad (1)$$

The human ear is sensitive to the intensity and not the phase of the sound. So if the initial sounds are of nearby frequency then

the $\nu_1 - \nu_2$ term is too slow to be perceived as the pitch and is often perceived as the variation of the first cosine term. One perceives the variation of the envelope's frequency which is $\nu_1 - \nu_2$ or the beat.

Musician's often use beats interference to match the tuning of their instruments in perfection.

4.2 Back to optics

So what is an optical beat ?

One doesn't hear of the term beats in optics commonly, not because they are not there but just because they commonly go by other names such as **heterodyne**.

The "heterodyne" or "beat" receiver has a local beat frequency oscillator (BFO) that produces a radio signal adjusted to have slightly different frequency to the incoming signal. When the two signals are mixed, a "beat" frequency equal to the difference between the two frequencies is created. By adjusting the local oscillator frequency correctly, the beat frequency is in the audio range, and can be heard as a tone in the receiver's earphones whenever the transmitter signal is present. Thus the Morse code "dots" and "dashes" are audible as beeping sounds.

5 Acoustic Optic Modulator(AOM)

Acousto-optic modulators (AOMs) are devices which allow the frequency, intensity and direction of a laser beam to be modulated. Acoustic waves travel via compressions and rarefactions which change the density of the medium in every $\frac{\lambda}{2}$ distance. This change of density across the medium makes the fluid act like a diffraction grating and the laser gets Bragg diffracted. Modulation of this incoming light can be achieved by varying the amplitude and frequency of the acoustic waves travelling through the crystal.

5.1 Working

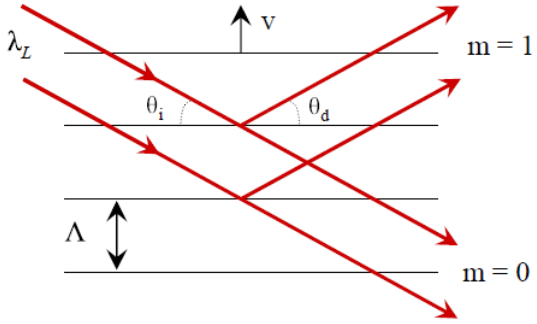

Figure 4: Bragg diffraction displaying direction of diffracted rays in constructive interference

Based on the model described above that is change of density introduced by compressions and rarefactions we can do the following analysis:
Let the optical and acoustic wavelengths be λ and Λ while θ_1 and θ_2 are the angles the incident and scattered rays make with the acoustic wavefronts. We obtain the following condition for constructive interference:

$$n\lambda = \Lambda(d\sin\theta_1 + d\sin\theta_2) \tag{2}$$

where n is an integer.
By conservation of energy and momentum for a light wave of frequency of order 10^8 Hz we see that $\theta_1 = \theta_2$ and so we can approximate the above equation to Bragg's equation i.e.

$$n\lambda = 2\Lambda d\sin\Theta \tag{3}$$

The Bragg condition would imply that there is only one value of the defection angle allowed $\Theta = 2\theta$, but this is based on the assumption that the acoustic and optical wavefronts are plane waves (i.e. infinitely wide).
If the acoustic beam is of finite width and the system is optimized for the first order maximum beam power, i.e. for the Bragg condition with n = 1, the result will be some light with scattering angle $m\Theta$, where m is the integer corresponding to the other orders.

Interpreting in terms of phonons, scattering into an angle of mΘ corresponds to the absorption or destruction of m phonons whose momenta contribute to the changed momentum of the light, and whose energies are added to that of the scattered photon. The change in frequency of the input light, Δf, can be written as :

$$\Delta f = \frac{mE_{phonon}}{h} \tag{4}$$

where h is Planck's constant and E_{phonon} is the phonon's energy.Note that if m $<$ 0, m phonons are created rather than destroyed and the frequency of the light decreases.

6 Setting up an AOM

Within an AOM the acoustic wave is provided by a radio frequency (RF) signal to the AOM, controlled by an AOM driver. This driver is made up of three components, a Voltage Controlled Oscillator (VCO); a Voltage Variable Attenuator (VVA); and an amplifier.

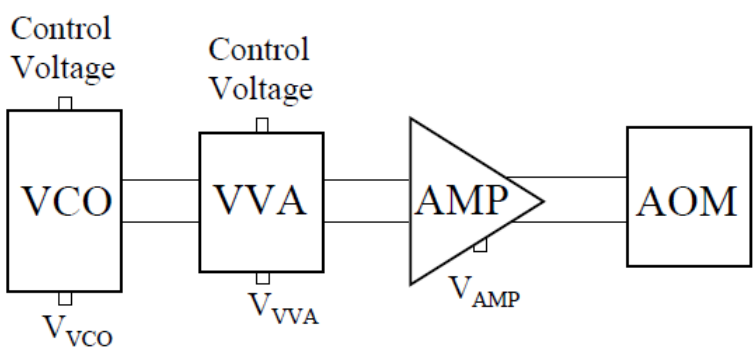

Figure 5: Schematic diagram of AOM setup

The VCO provides a sine wave output, the frequency of the RF output is determined by an applied control voltage, and varies approximately linearly with it. The VVA attenuates the output from the VCO, the degree of attenuation is controlled by varying the applied control voltage to the VVA. The amplifier amplifies the output of the VVA, such that the RF output is sufficient to drive the AOM. The response of the AOM varies with the frequency and

amplitude of the input RF signal. It is good practice to ensure that the amplifier is separated from the VCO to guard against heating from the amplifier affecting the VCO frequency, whilst ensuring that the cable connecting the amplifier to the AOM is kept as short as possible to minimize any loss of signal or creation of noise.

7 Alignment of AOM

Alignment of optical instruments has always needed a precise eye, for even mild disturbances can harm the entire setup. Our setup is for optical beats but it's pretty obvious that one cannot measure frequencies of the order of 10^{15} Hz at least not with the instruments available to us.In reality it is the electronic systems that can't really respond to such high frequencies. So to detect the beat frequency of the order of 10^{15} Hz we needed to find another way out.

Here is where the AOM comes into play, we shift the frequency of the laser in one of the paths by say an order which we can measure(here 80 MHz) so that the beat frequency observed comes out to be of this order.

7.1 Testing the photodiode

An ultra fast photodetector was the solution to this problem. It can detect upto 10^9Hz. So we began with testing if the photodiode worked fine. For this we gave beat signals of slowly increasing frequency and noted the response. It worked great till frequencies of 200MHz which is benificial since we need it to work fine at 80 MHz.

7.2 Testing the RF oscillator

We setup a waveform generator and used it to modulate the amplitude of the sine waves of connect to oscilloscope

We finally observed the fourier transform of the signal in frequency domain which was supposed tow give two delta functions since the fourier transform of a sine function is two Dirac-delta functions.

However since frequency cannot be negative we should observe only one δ function.

To our surprise we observed **multiple delta functions equally spaced to each other**. We could not resolve this issue since the output represents a dirac comb and the fourier transform of a dirac comb is a dirac comb and we certainly did not give multiple delta functions as input.

Observations:

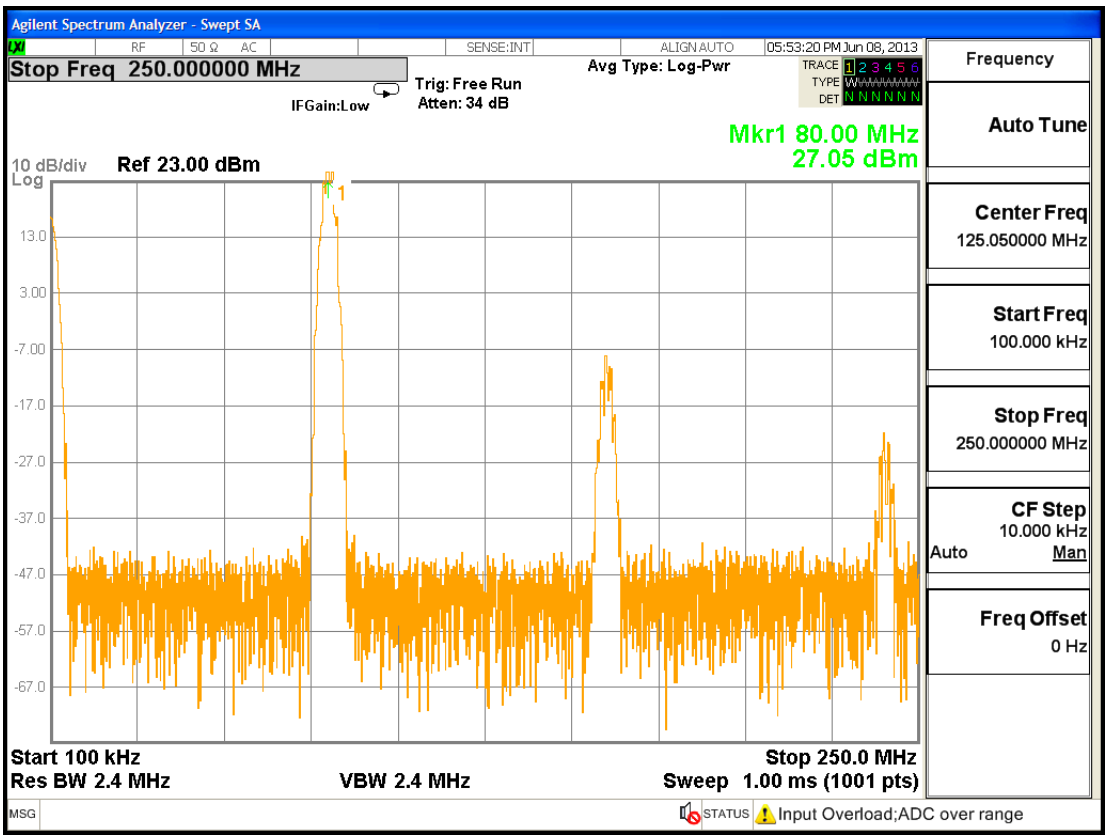

Figure 6: Delta functions observed as an output

Resolving the paradox When we looked carefully at our apparatus we observed that the RF oscillator was a something inside a box(black box for us). It certainly seemed clear that the frequency shift was being done with some kind of a mechanical oscillator. And as we already know when we setup oscillations in a mechanical oscillator with nodes at both ends **one gets integral multiples of the frequencies and not just one frequency**.

As a result our input signal was transformed to multiple sine waves of integral multiple frequencies, the fourier transform of which is multiple delta functions equally spaced.

So we concluded the RF oscillator was working just fine.

8 Observing the beats

So finally we setup the Mach-Zehnder interferometer as shown in the figure below:

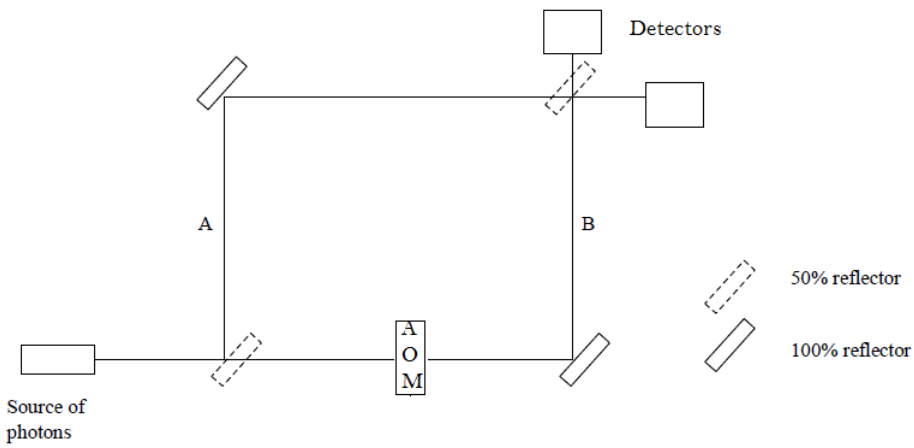

Figure 7: Mach-Zender to observe Beats signal

Observed beats:

The signals from the detectors show readings shifted by a phase difference of $\frac{\pi}{2}$ even when the length of the electronic cables used is same. The above statement is important in the sense that if the length of the electronic cables is different for the two detectors as shown in the figure above then it induces a phase difference.

Change in phase with change in cable length

The x-axis is time and y-axis is amplitude.

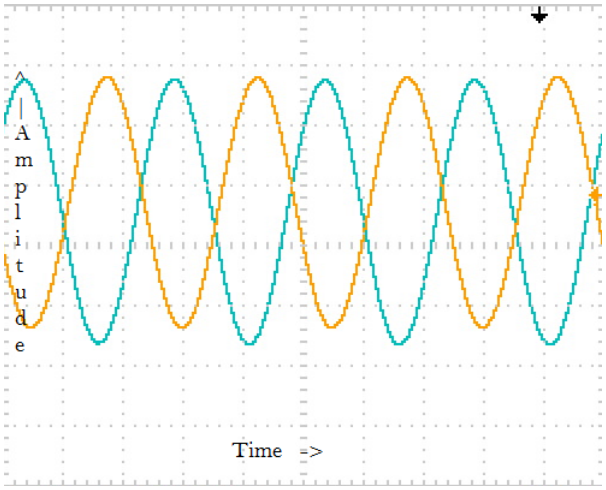
Amplitude
Time ->
Time ->
Time ->

9 What's next ?

The same setup for Mach-Zehnder inteferometer was used to setup a rubidium shell and observe the spectral lines that are Doppler shifted. The beats signal can be used for the observing spectral lines too. If the beats signal are really at 80 Mhz as calculated then they can excite a transition in Rubidium corresponding to this energy difference.

REFERENCES

1. *A Guide to Acousto-Optic Modulators*, by D. J. McCarron
2. *www.en.wikipedia.org*