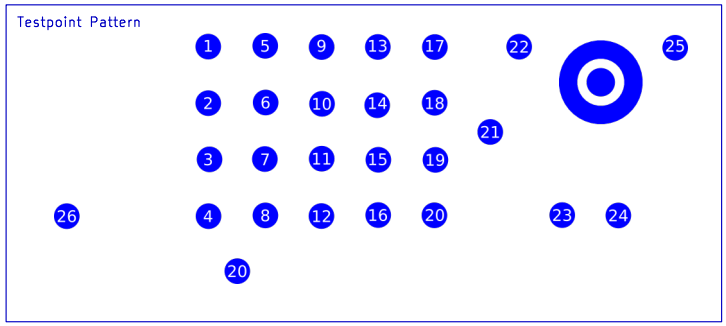

Testpoint	Voltage	Signal
TP1	4V (Fully charged)	Battery Voltage
TP2		
TP3		
TP4	0.5V Amplitude	Left NFC Coil
TP5	0.5V Amplitude	Right NFC Coil
TP6	0V	GND
TP7	1.8V	1.8V Output of ASIC Regulator
TP8		
TP9	1.8V	SOC Enable
TP10	1.8V	SPI Flash Memory CS
TP11	1.8V	Acceleromter CS
TP12		
TP13		
TP14		
TP15	1.8V	SCK (8 MHz)
TP16	1.8V	MOSI
TP17		
TP18		
TP19	0V	MISO
TP20		
TP21		
TP22	40mA Amplitude	Top NFC Coil
TP23	4V	Charging Voltage
TP24	4mA Amplitude	Bottom NFC Coil
TP25	0.5V Amplitude	Front NFC Coil
TP26	10mA Amplitude	Back NFC Coil

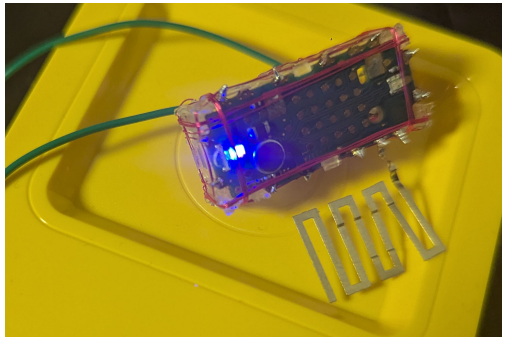

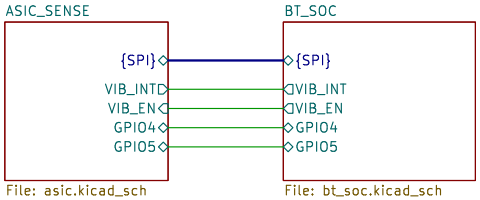

Sheet: /
File: lego_smart_brick.kicad_sch

Title:

Size: A4	Date:	**Rev:**
KiCad E.D.A. 9.0.3		Id: 1/5

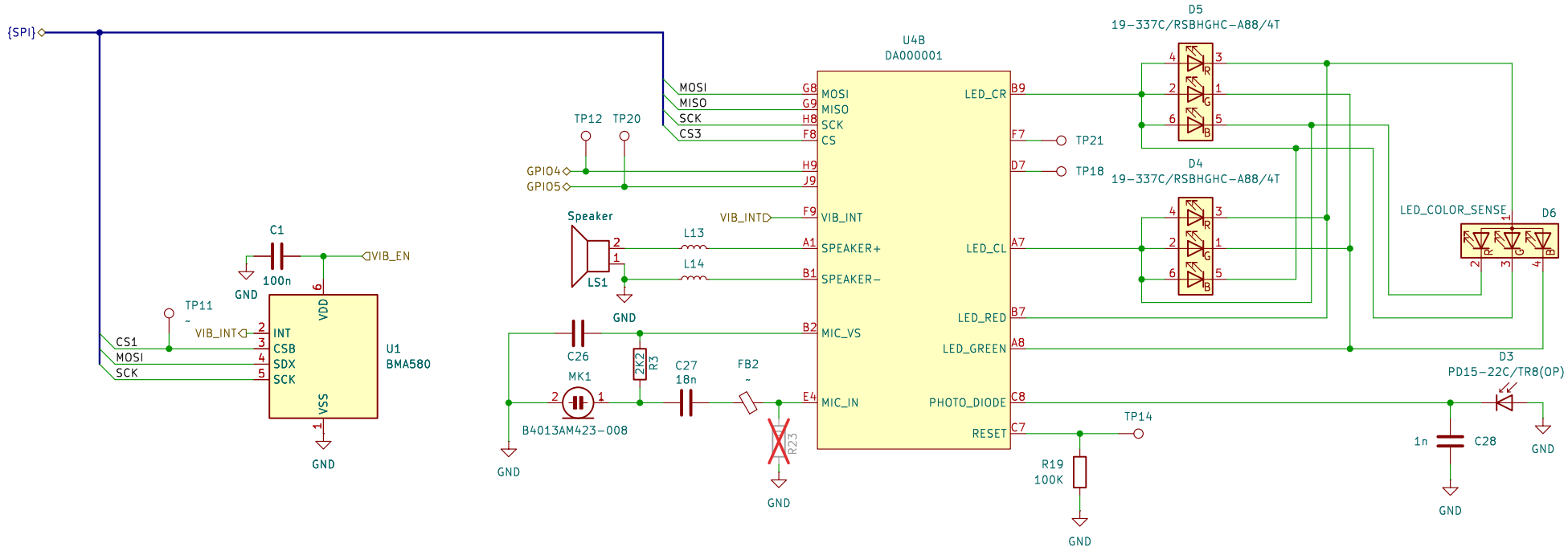

Sheet: /ASIC_SENSE/
File: asic.kicad_sch

Title:

Size: A4	Date:	Rev:
KiCad E.D.A. 9.0.3		Id: 3/5

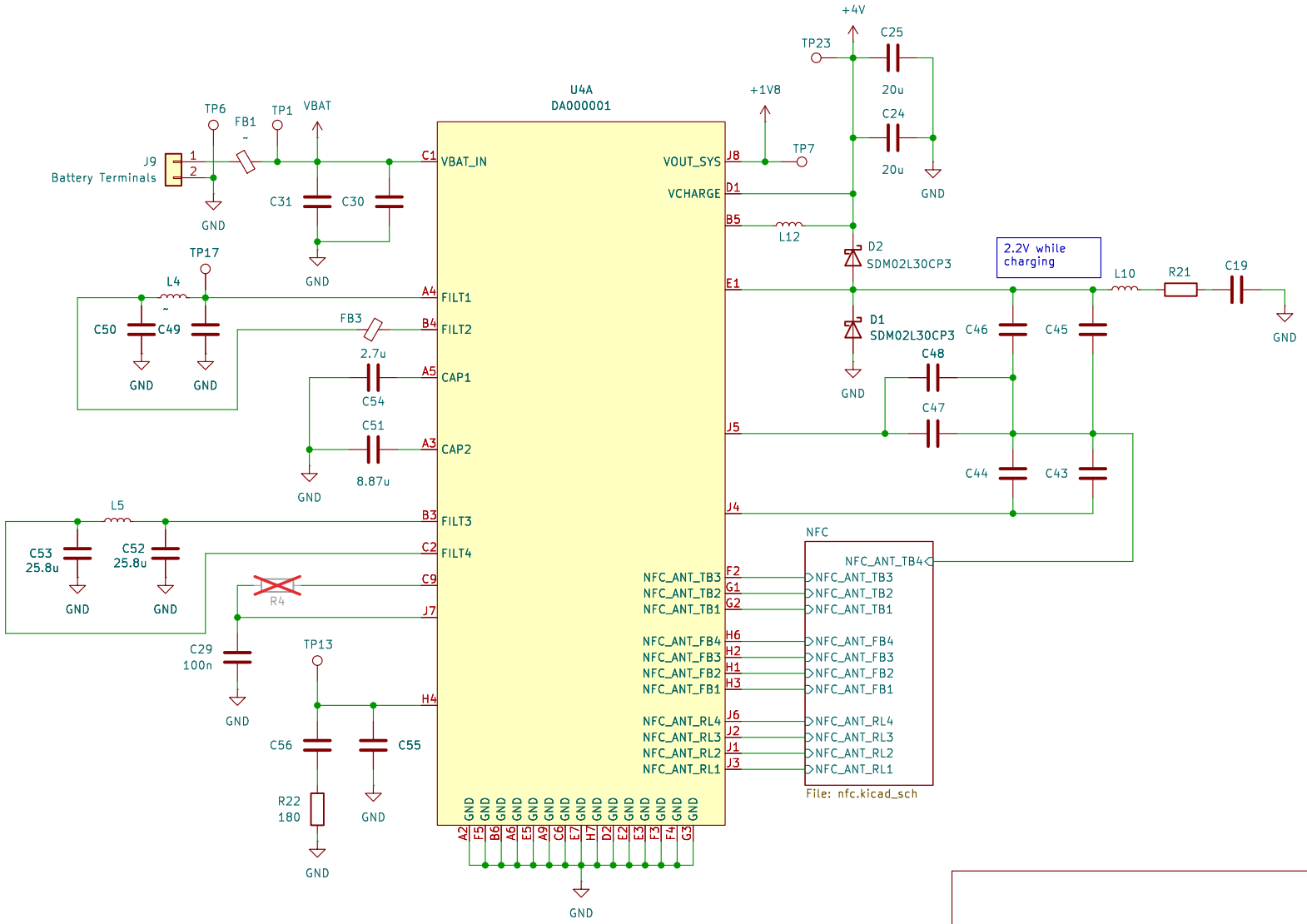

Sheet: /ASIC_PWR_NFC/
File: asic_pwr.kicad_sch

Title:

Size: A4	Date:	Rev:
KiCad E.D.A. 9.0.3		Id: 4/5

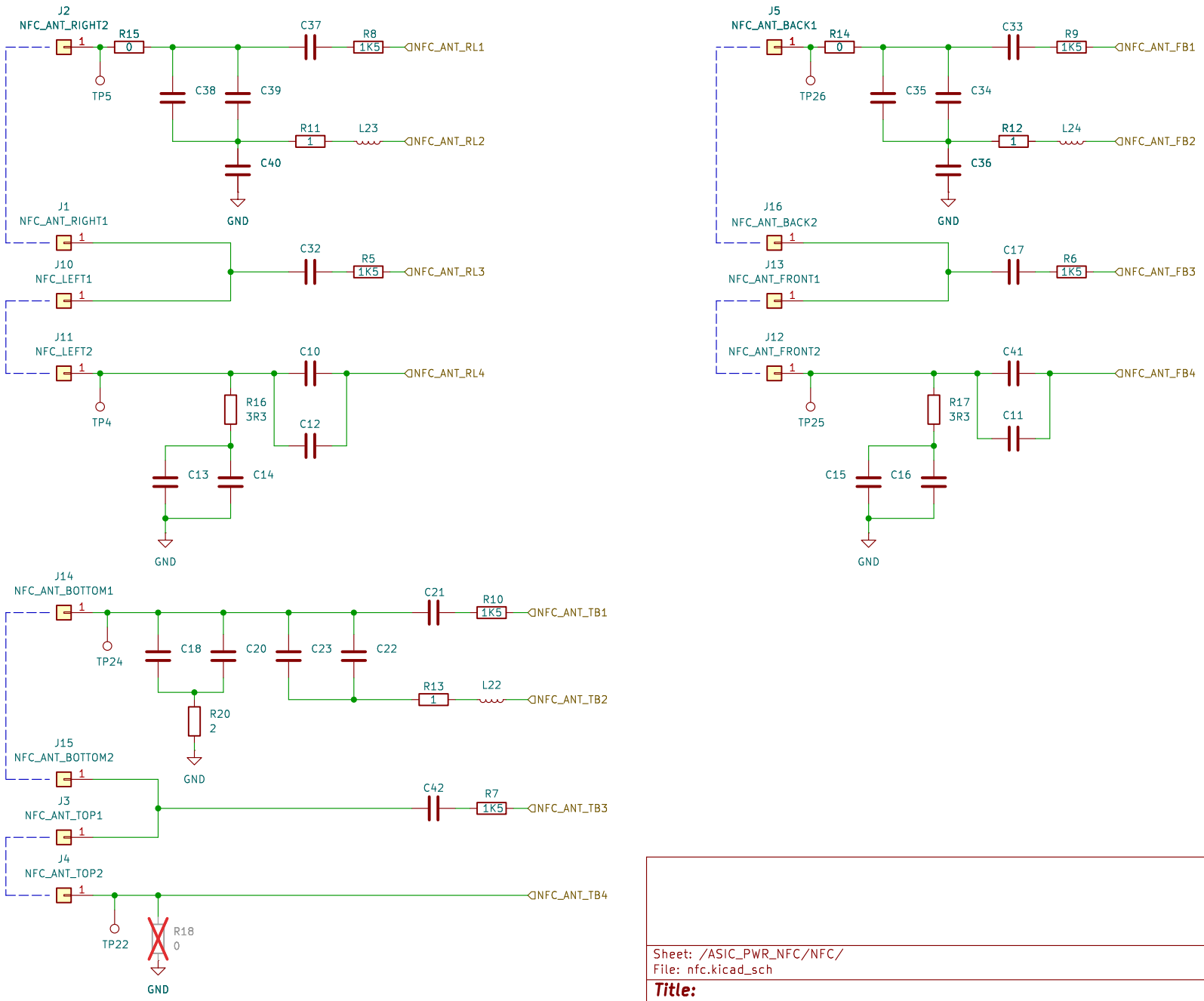

Sheet: /ASIC_PWR_NFC/NFC/
File: nfc.kicad_sch

Title:

Size: A4	Date:	Rev:
KiCad E.D.A. 9.0.3		Id: 5/5

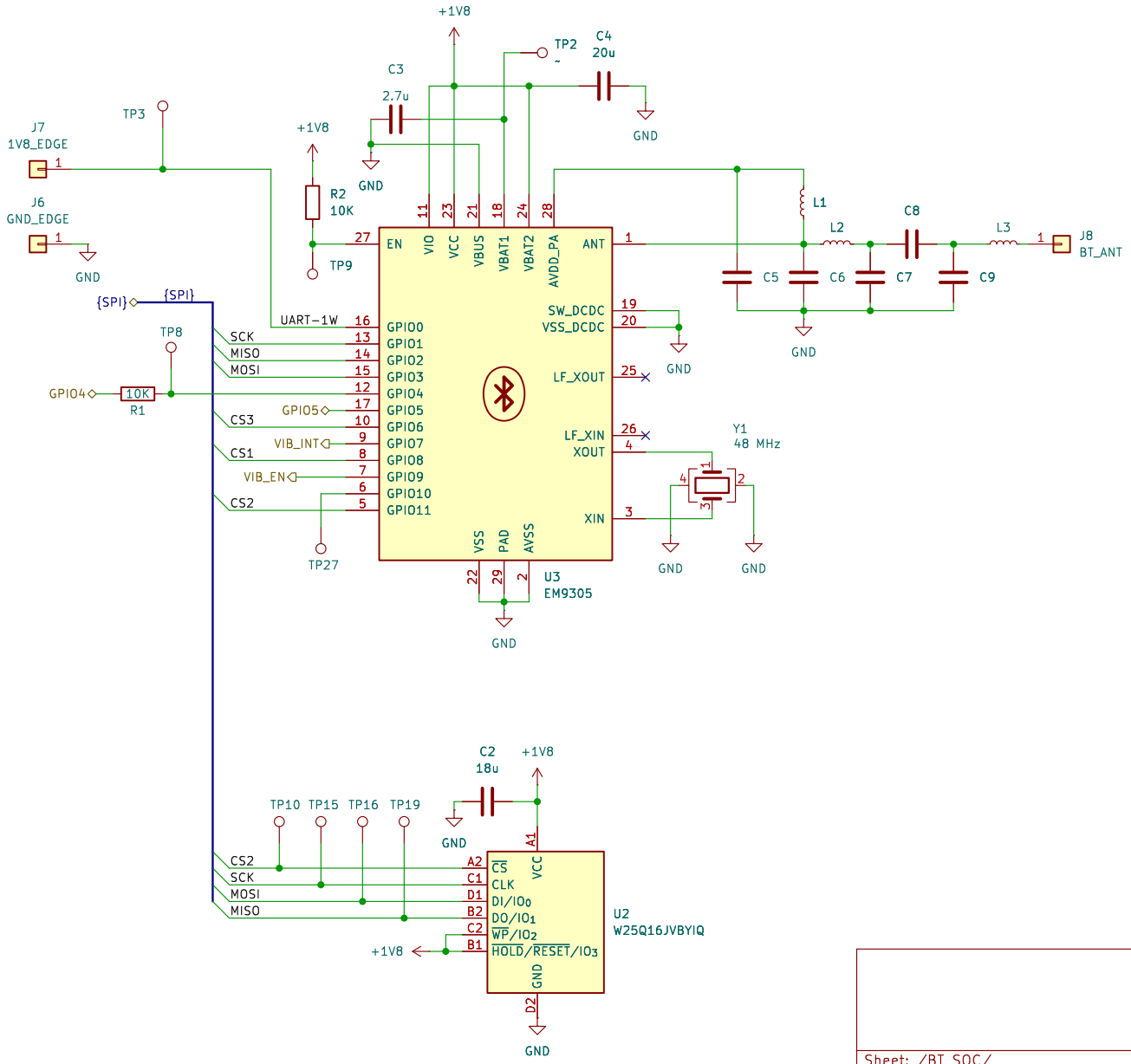

Sheet: /BT_SOC/
File: bt_soc.kicad_sch

Title:

Size: A4	Date:	Rev:
KiCad E.D.A. 9.0.3		Id: 2/5