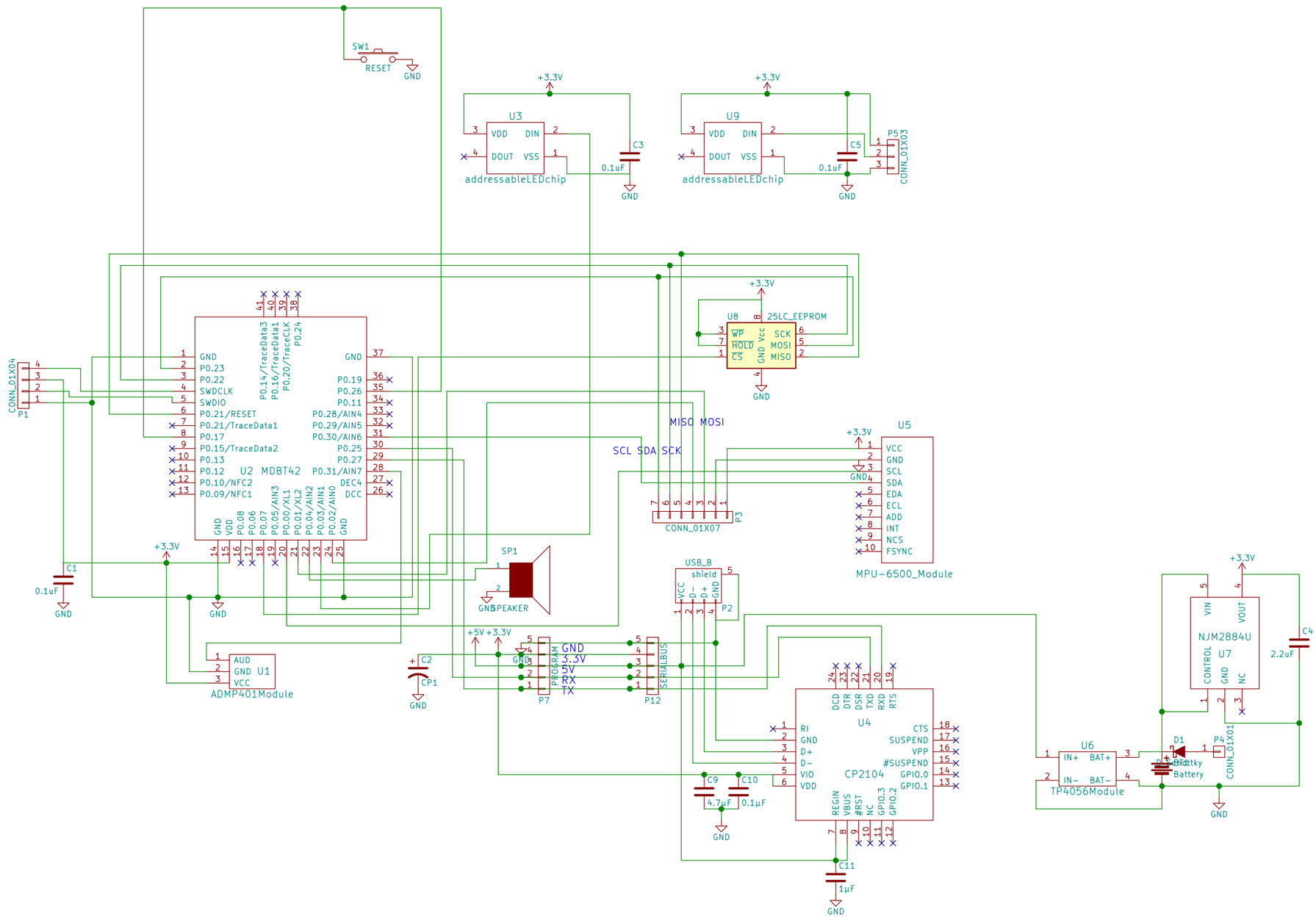

Sheet: /
File: MDBT42STICK.sch

Title:

Size: A3	Date:	Rev:
KiCad E.D.A. kicad 4.0.2+dfsg1-stable		Id: 1/1