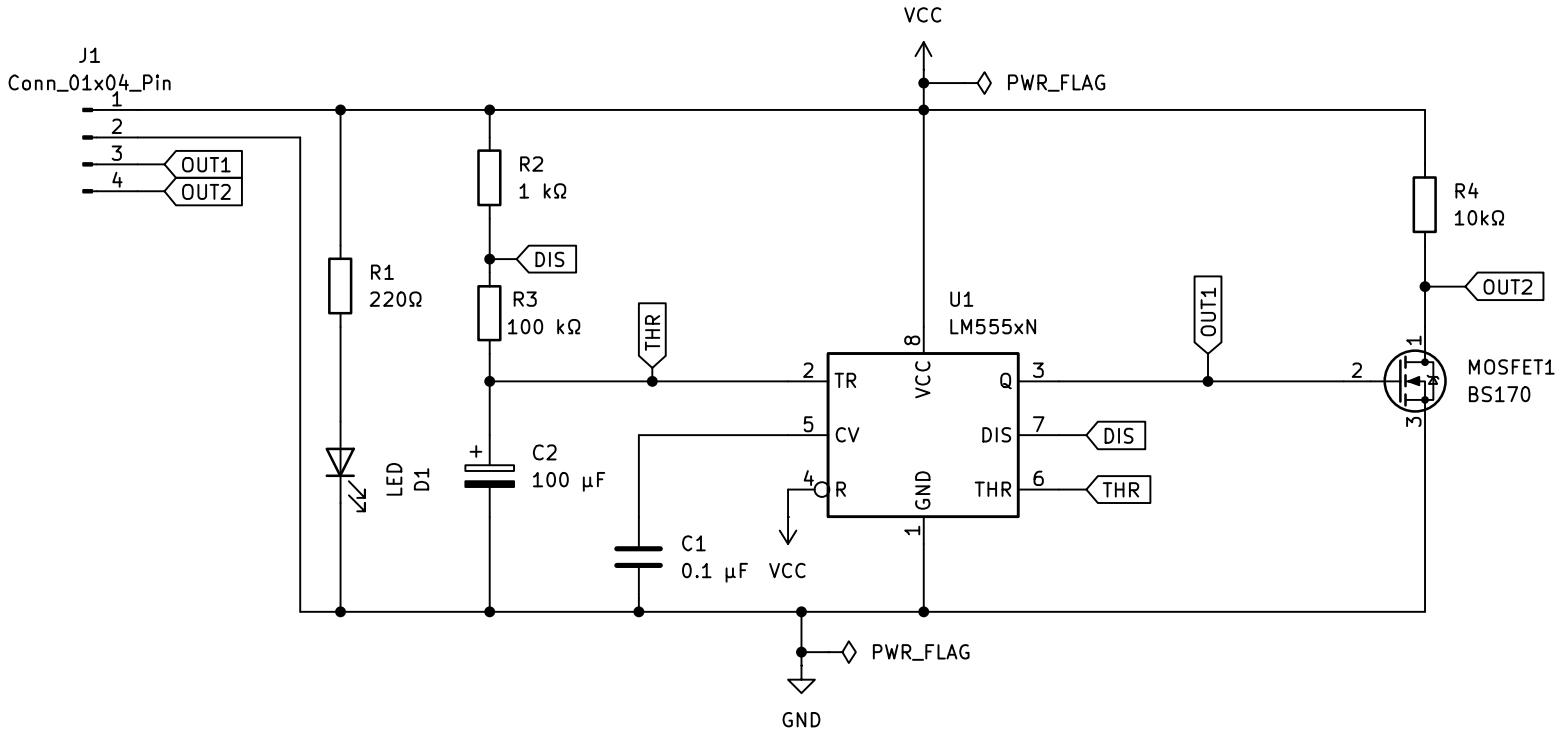


NNM22AM033, Dept. of AIML

**Nandan R Pai**

Sheet: /

File: 555Timer.kicad_sch

***Title: 555 Timer Circuit***

| | | |
|---|---|---|
| Size: User | Date: 2025-01-15 | **Rev: V1** |
| KiCad E.D.A. 8.0.8 | | Id: 1/1 |