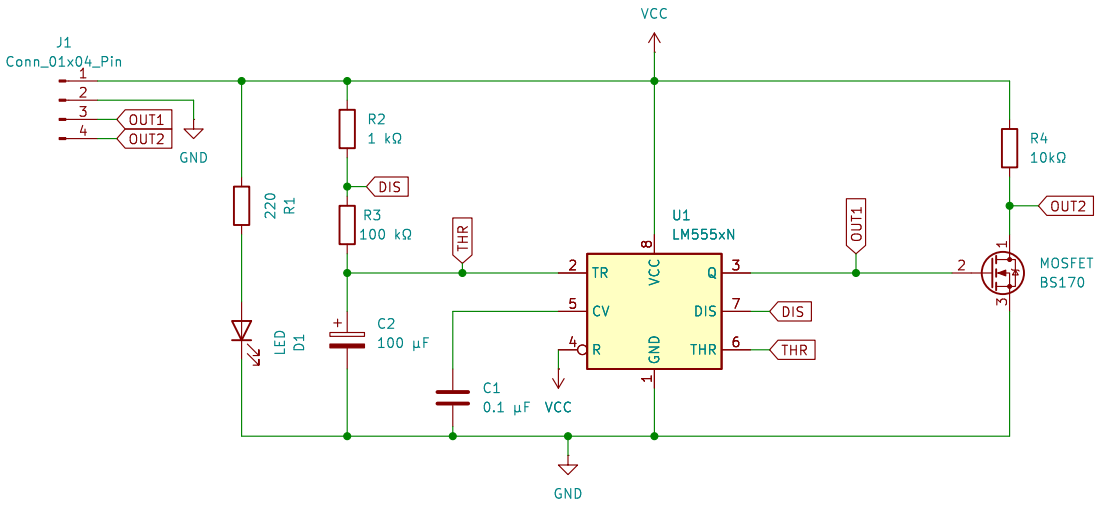

NNM22AM033, Dept. of AIML

Nandan R Pai

Sheet: /

File: 555Timer.kicad_sch

Title: 555 Timer Circuit

Size: User	Date: 2025-01-15	**Rev: V1**
KiCad E.D.A. 8.0.8		Id: 1/1