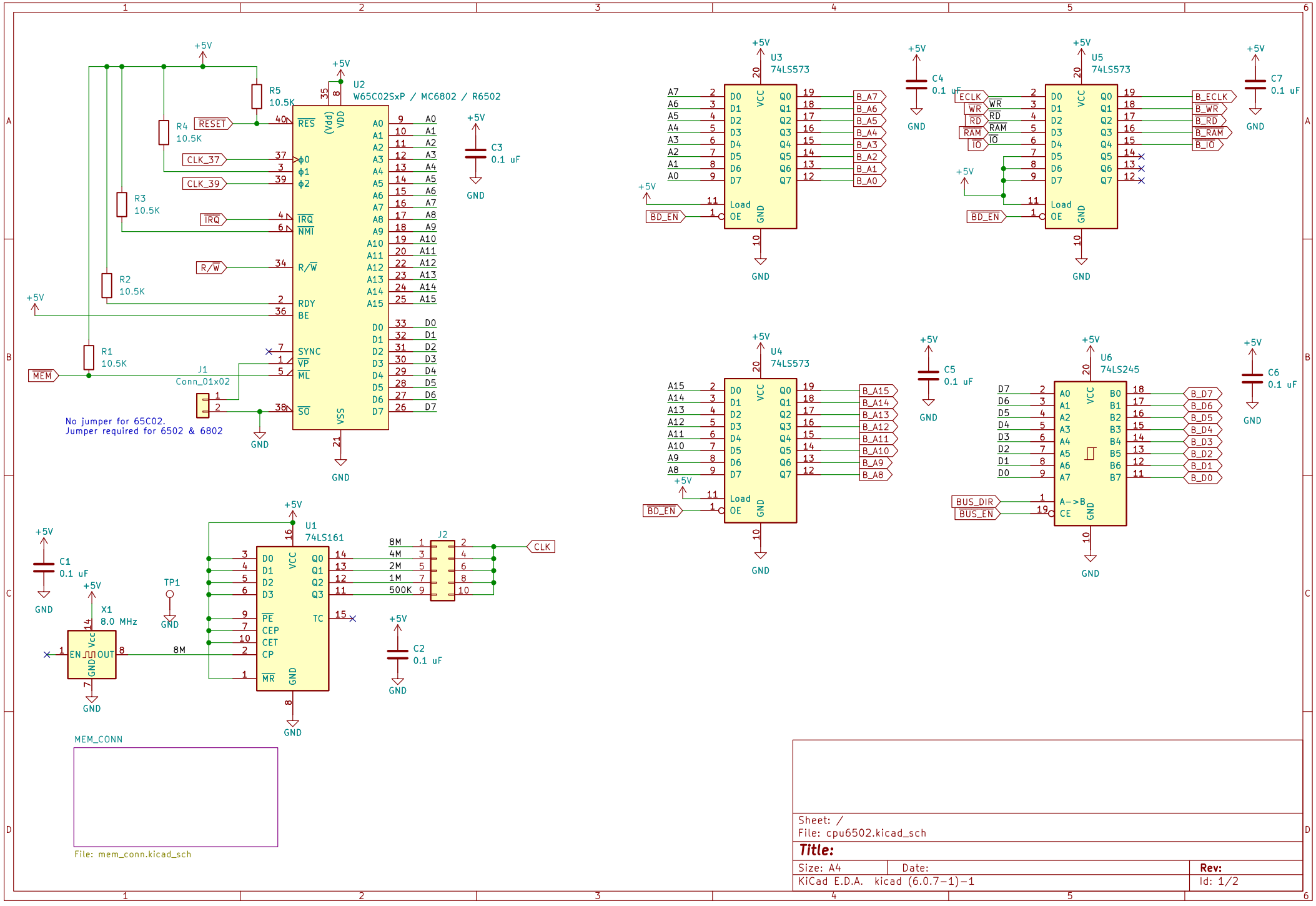
U2
W65C02SxP / MC6802 / R6502
U3
74LS573
U4
74LS573
U5
74LS573
U6
74LS245
U1
74LS161
J1
Conn_01x02
J2
X1
8.0 MHz
TP1
MEM_CONN
File: mem_conn.kicad_sch
No jumper for 65C02.
Jumper required for 6502 & 6802
Sheet: /
File: cpu6502.kicad_sch
Title:
Size: A4
Date:
Rev:
KiCad E.D.A. kicad (6.0.7-1)-1
Id: 1/2

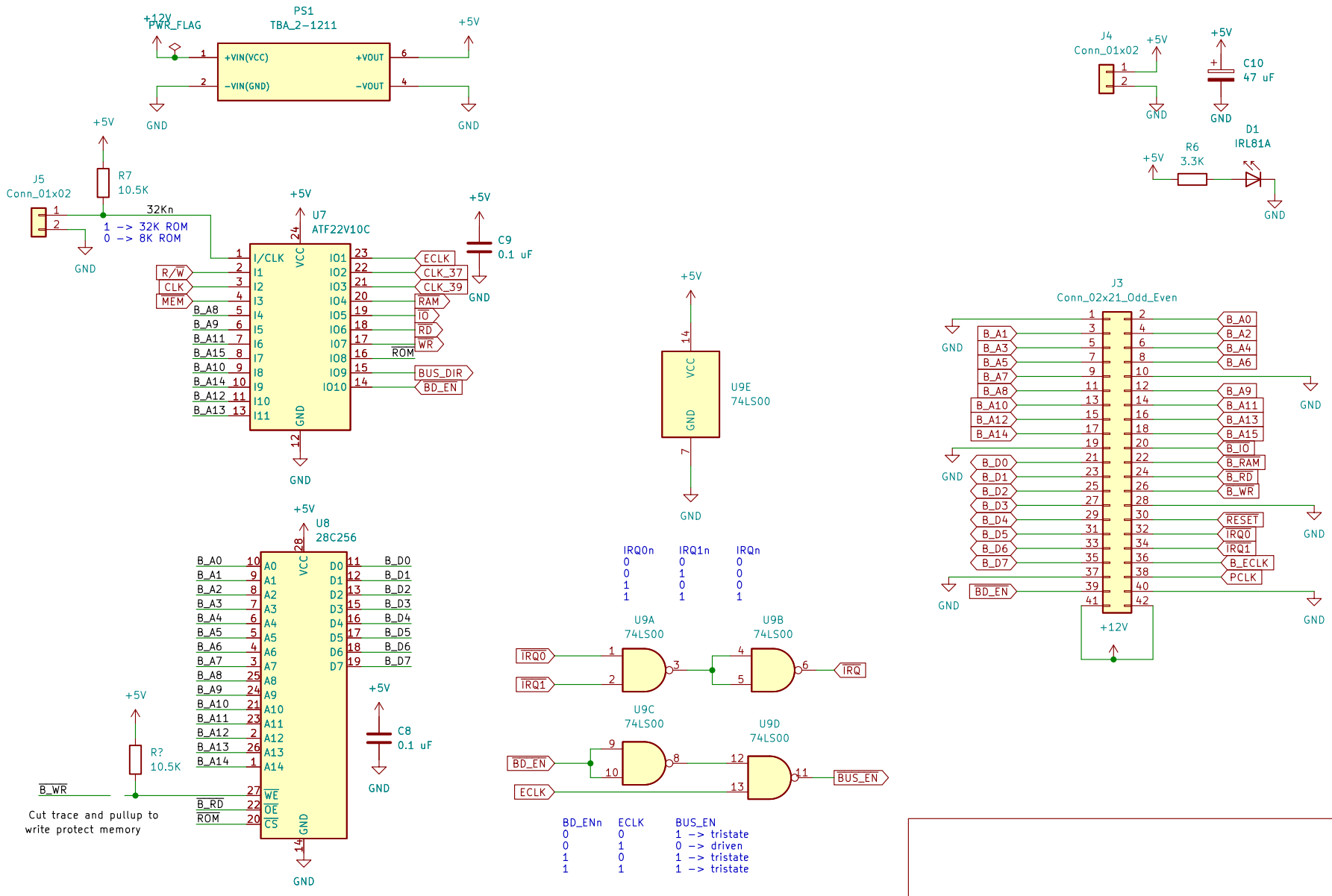

Sheet: /MEM_CONN/
File: mem_conn.kicad_sch

Title:

Size: A4	Date:	**Rev:**
KiCad E.D.A. kicad (6.0.7-1)-1		Id: 2/2