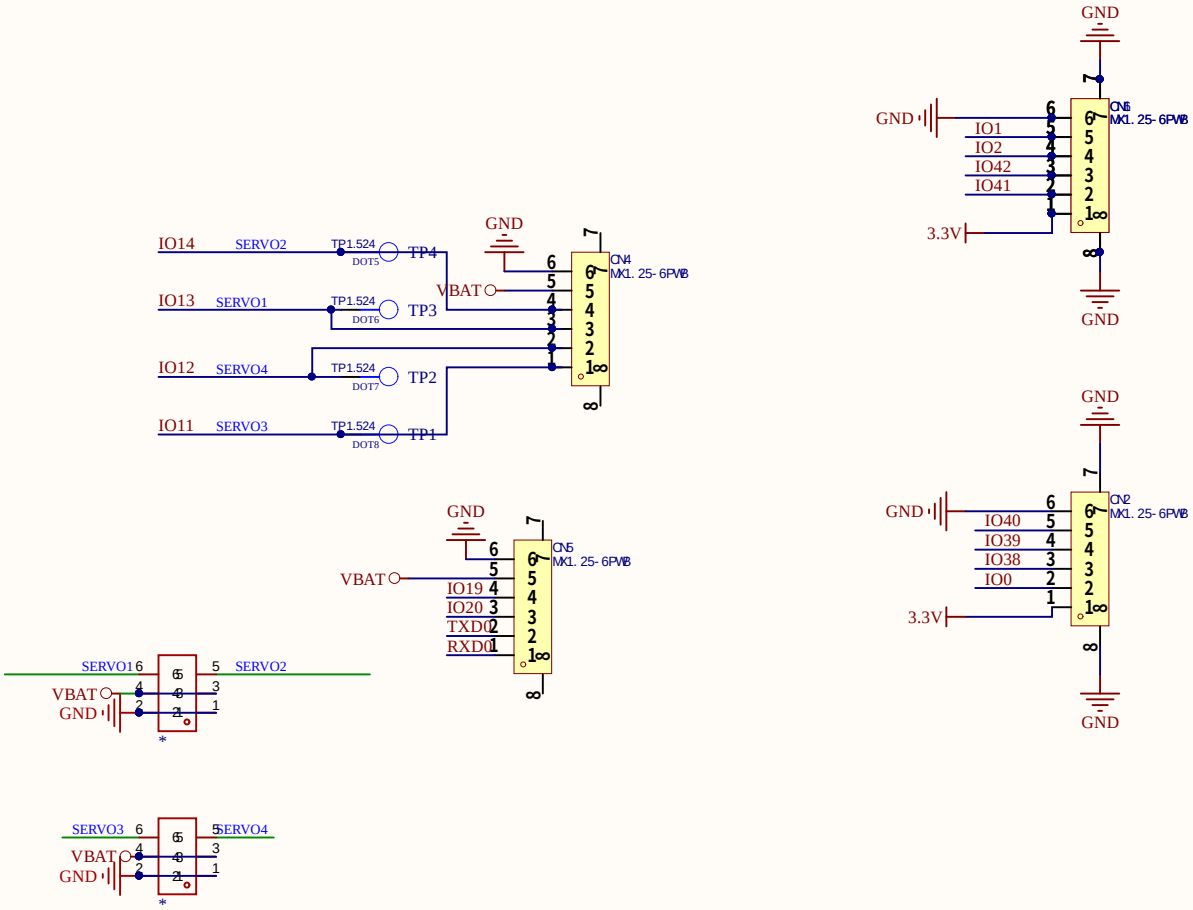

Title		
Size A4	Number	Revision
Date: 2026/2/27	Sheet of	
File: D:\电路设计\..\AI-EYE_BAT (1).SchDoc	Drawn By:	

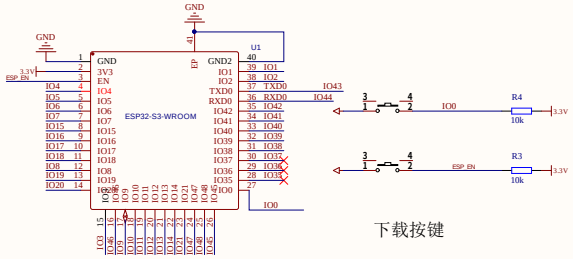

ESP32S3系统

下载按键

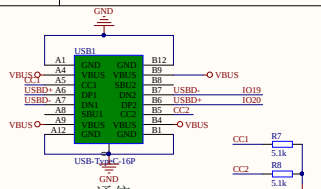

USB通信

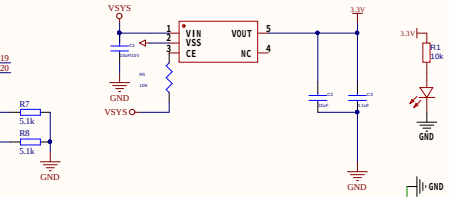

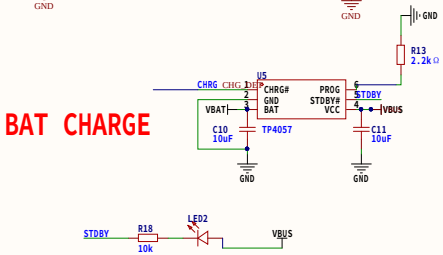

BAT CHARGE

电池1.25MM

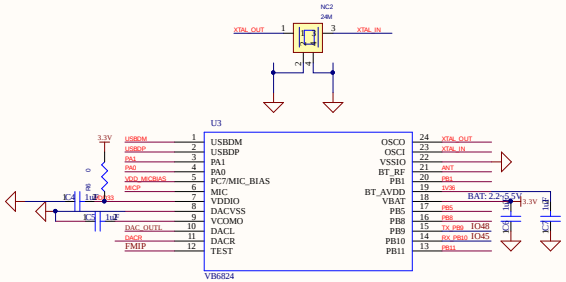

语音

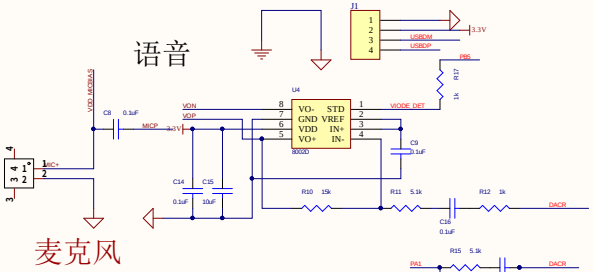

麦克风

喇叭

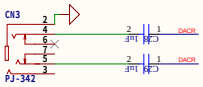

耳机口

Title		
Size A2	Number	Revision
Date: 2026/2/27	Sheet of	
File: D:\电路设计\.\AI-EYE_BAT (2).SchDoc	Drawn By:	

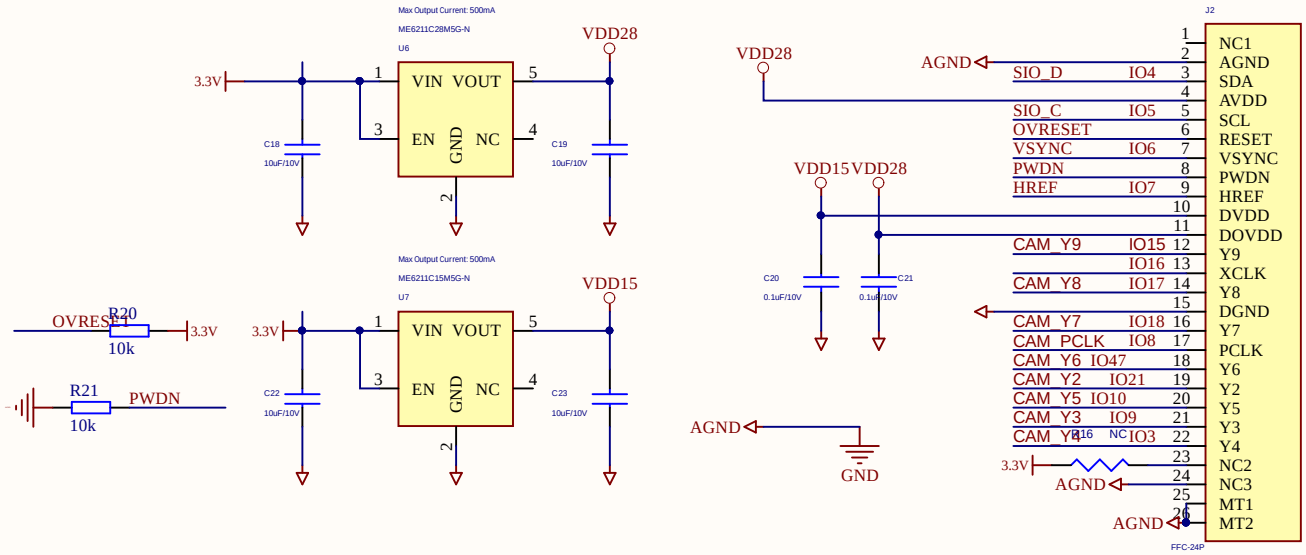

Title		
Size A4	Number	Revision
Date: 2026/2/27	Sheet of	
File: D:\电路设计\..\OV2640摄像头.SchDoc	Drawn By:	

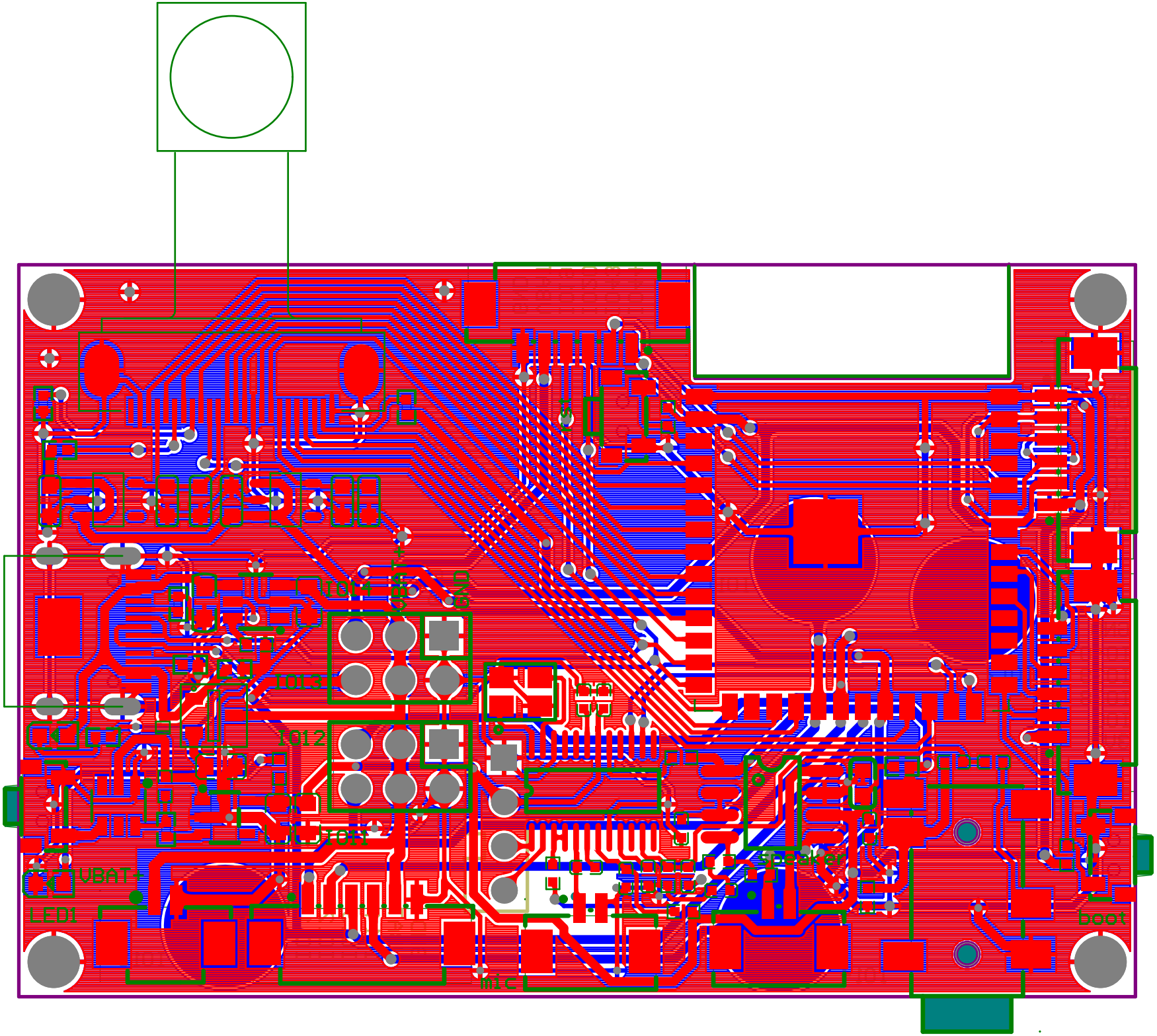
IO14
IO13
IO12
IO11
VBAT+
LED1
mic
speaker
boot

Comment	Description	Designator	Footprint	LibRef	Quantity
TS24CA 250gf 013		BOOT1, RST1	SW-SMD_L4.7-W3.5-P3.35-EH	TS24CA 250gf 013	2
10uF/10V		C1	C0603	CAP NP	1
22uF		C2	C0603	CAP NP	1
0.1uF		C3	C0603	CAP NP	1
1uF		C4, C5, C6, C7, C28, C29	C0402	C_Dup1	6
0.1uF		C8, C9, C14, C16, C17	C0402	C	5
10uF		C10, C15	C0603	HGC0402R5106M100NTEJ, C	2
10uF		C11	0603C	HGC0402R5106M100NTEJ	1
10uF/10V		C18, C19, C22, C23	0603C	CAP NP	4
0.1uF/10V		C20, C21	0603C	CAP NP	2
MX1.25-6PWB		CN1, CN2, CN4, CN5, CN6	CONN-SMD_6P-P1.25_XUNPU_WAFER-MX1.25-6PWB	CONN-MX1.25-6PWB	5
PJ-342		CN3	AUDIO-SMD_PJ-342	PJ-342_C668606	1
TP4		DOT5	TP-5	TP	1
TP3		DOT6	TP-5	TP	1
TP2		DOT7	TP-5	TP	1
TP1		DOT8	TP-5	TP	1
		H1, H2	HDR-TH_6P-P2.54-V-M-R2-C3-S2.54	X6521WV-2×03H-C30D60	2
Header 4	Header, 4-Pin	J1	MQ	Header 4	1
FFC-24P		J2	FFC24-0P5	CON24_3	1
KT-0603R		LED1	LED0603-RD	KT-0603R	1
		LED2	LED0603-RD	KT-0603R	1
ZX-MX1.25-2PWT		MX1, MX2	CONN-SMD_2P-P1.25-WT2P	ZX-MX1.25-2PWT	2
ZX-MX1.25-2PWT		MX3	CONN-SMD_2P-P1.25_MEGASTAR_ZX-MX1.25-2PWT	ZX-MX1.25-2PWT	1
24M		NC2	CY3225	CRYSTAL-3.2X2.5	1
10k	[NoValue], Surface mount resistor 0402	R1, R3, R4, R5, R18, R20, R21	R0402	10k/1%, SMT_R_0402, RESISTOR_0, 0402WGF4701TCE, RES2	7
0		R6	R0402	R	1
5.1k		R7, R8, R11, R15	R0402	RES2, R	4
15k		R10	R0402	R	1
1k		R12, R17	R0402	R	2
2.2kΩ		R13	R0402	0402WGF1501TCE	1
NC		R16	R0402	R	1
ESP32-S3-WROOM		U1	ESP32-S3-WROOM	ESP32-S3-WROOM	1
VB6824		U3	ssop24	IS5843H	1
8002D		U4	SOP8	JT6603_0	1
TP4057		U5	SOT-23-6_L2.9-W1.6-P0.95-LS2.8-BR	TP4057	1
ME6211C28M5G-N		U6	SOT-23-5	RT9013_0	1
ME6211C15M5G-N		U7	SOT-23-5	RT9013_0	1
USB-TypeC-16P		USB1	usb-typec-16p	USB-TypeC-16P	1
XC6220B331MR-G		XC1	SOT-25_L3.0-W1.6-P0.95-LS2.8-TL	XC6220B331MR-G	1