CASE INSENSITIVE:

m ≡ {b|B, f|F, j|J, l|L, m|M, r|R, v|V, w|W, x|X, y|Y}

λ ≡ ሌላ (any other key)

ω ≡ return to state 0 without input

(f|F)Y → ፈ AND (m|M)Y → ሸ

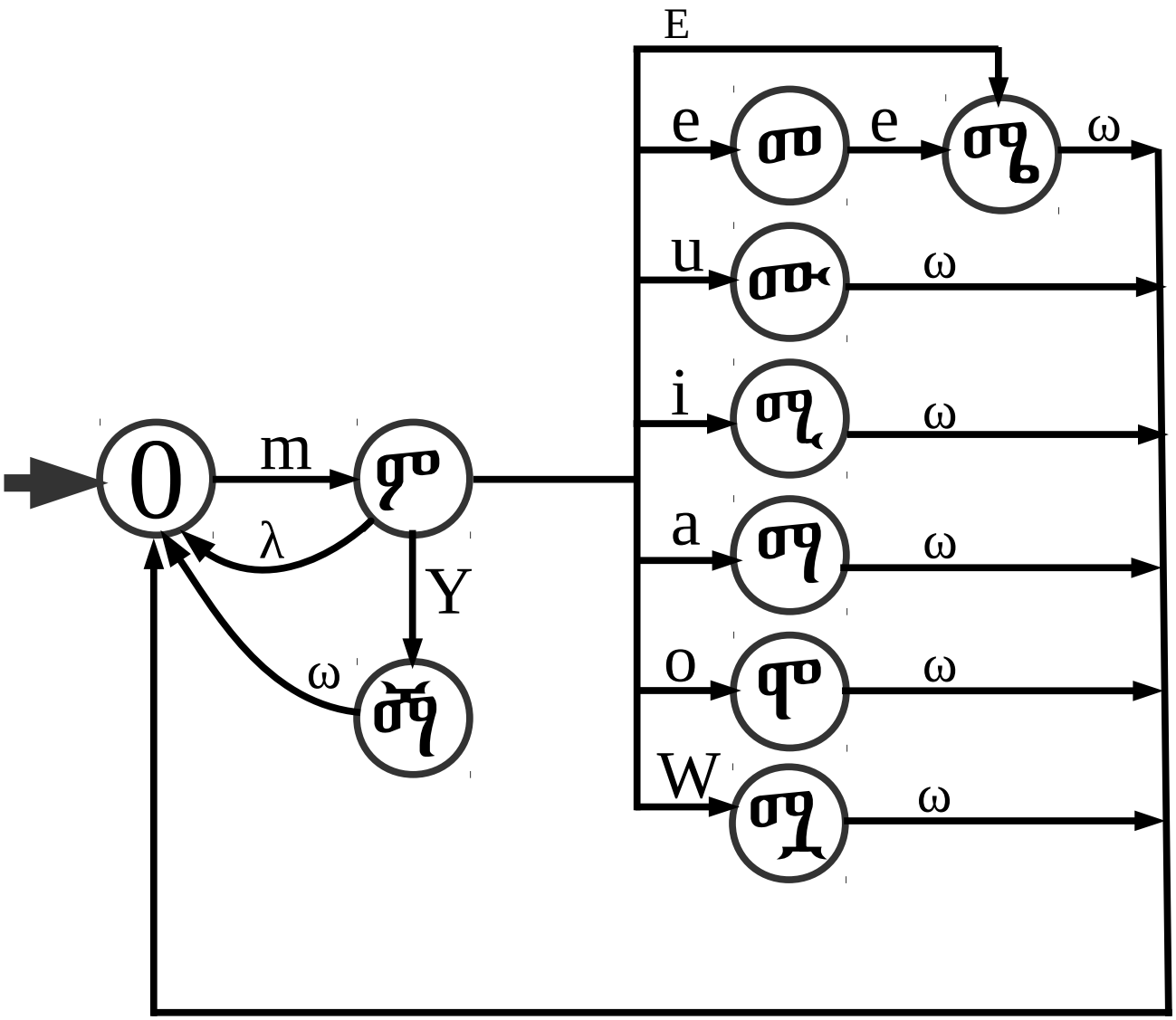

CASE SENSITIVE:

m ≡ {c, C, d, D, g, G, H, k, K, n , N, p, P, q, Q, t, T, z, Z}

λ ≡ ሌላ (any other key)

ω ≡ return to state 0 without input

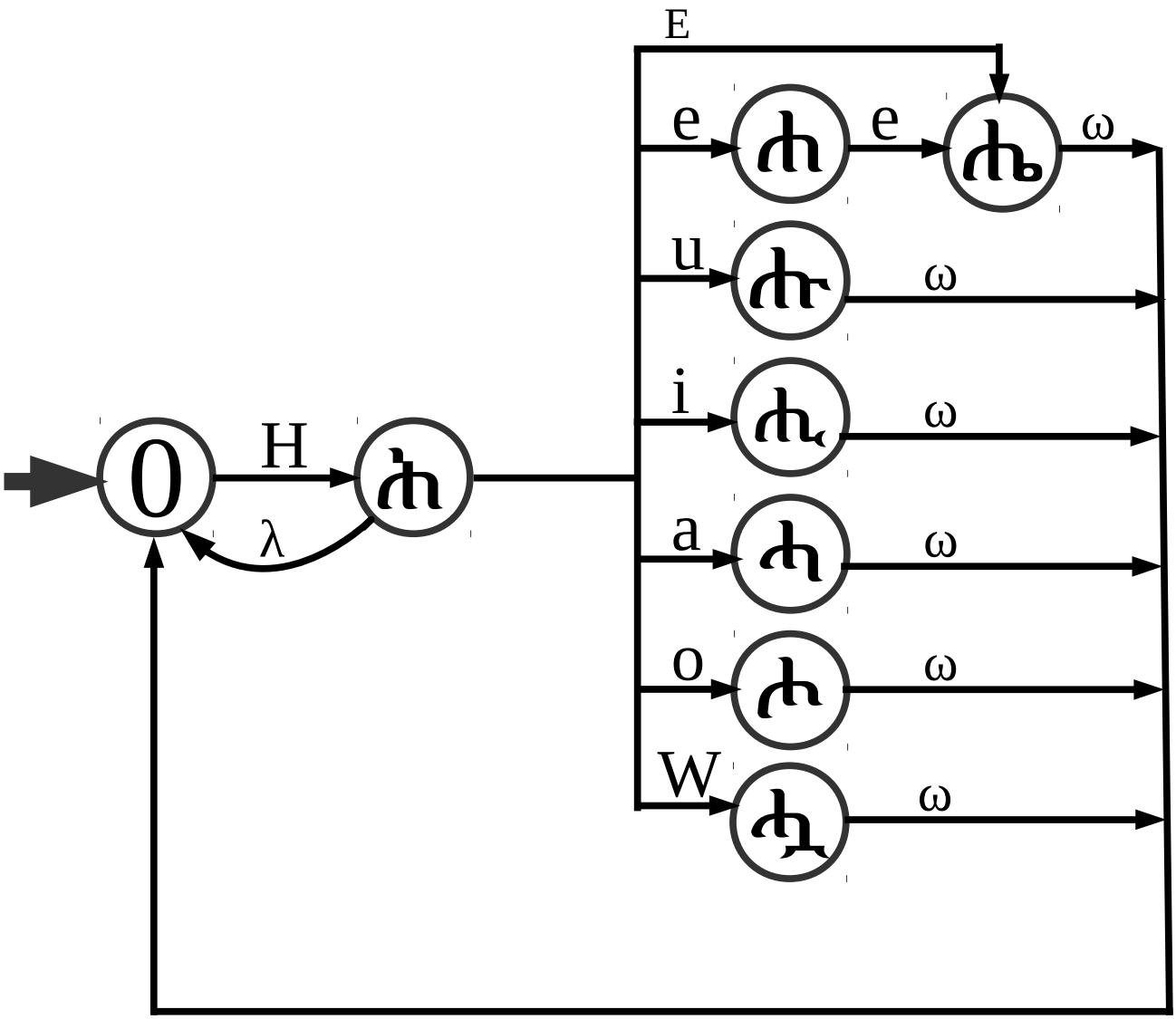

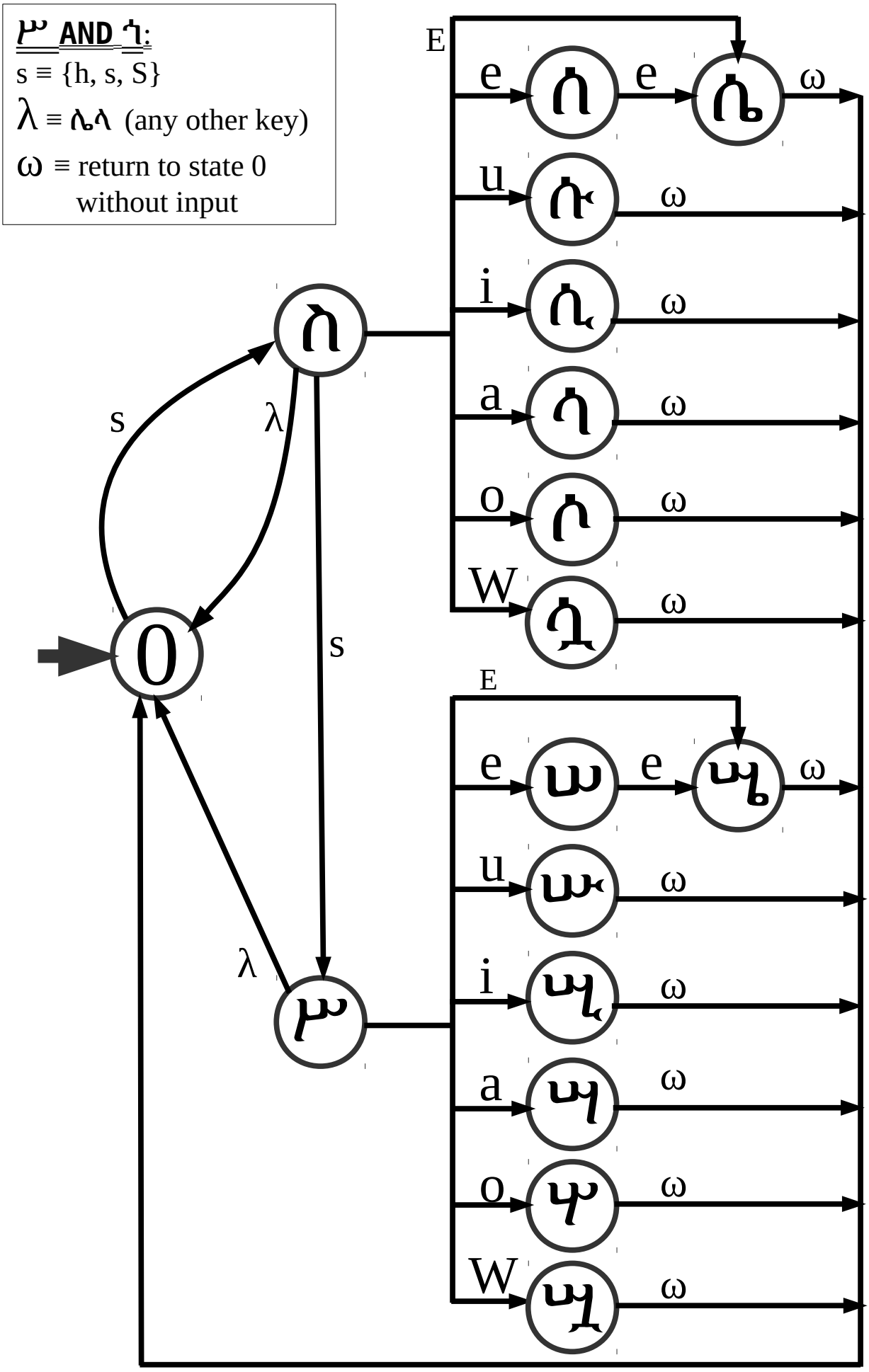
ሥ AND ጎ:
s ≡ {h, s, S}
λ ≡ ሌላ (any other key)
ω ≡ return to state 0 without input
E
e
ሰ
e
ሴ
ω
u
ሱ
ω
i
ሲ
ω
a
ሳ
ω
o
ሶ
ω
W
ኋ
ω
ስ
s
λ
s
0
E
e
ሠ
e
ሤ
ω
u
ሡ
ω
λ
i
ሢ
ω
ሥ
a
ሣ
ω
o
ሦ
ω
W
ኣ
ω

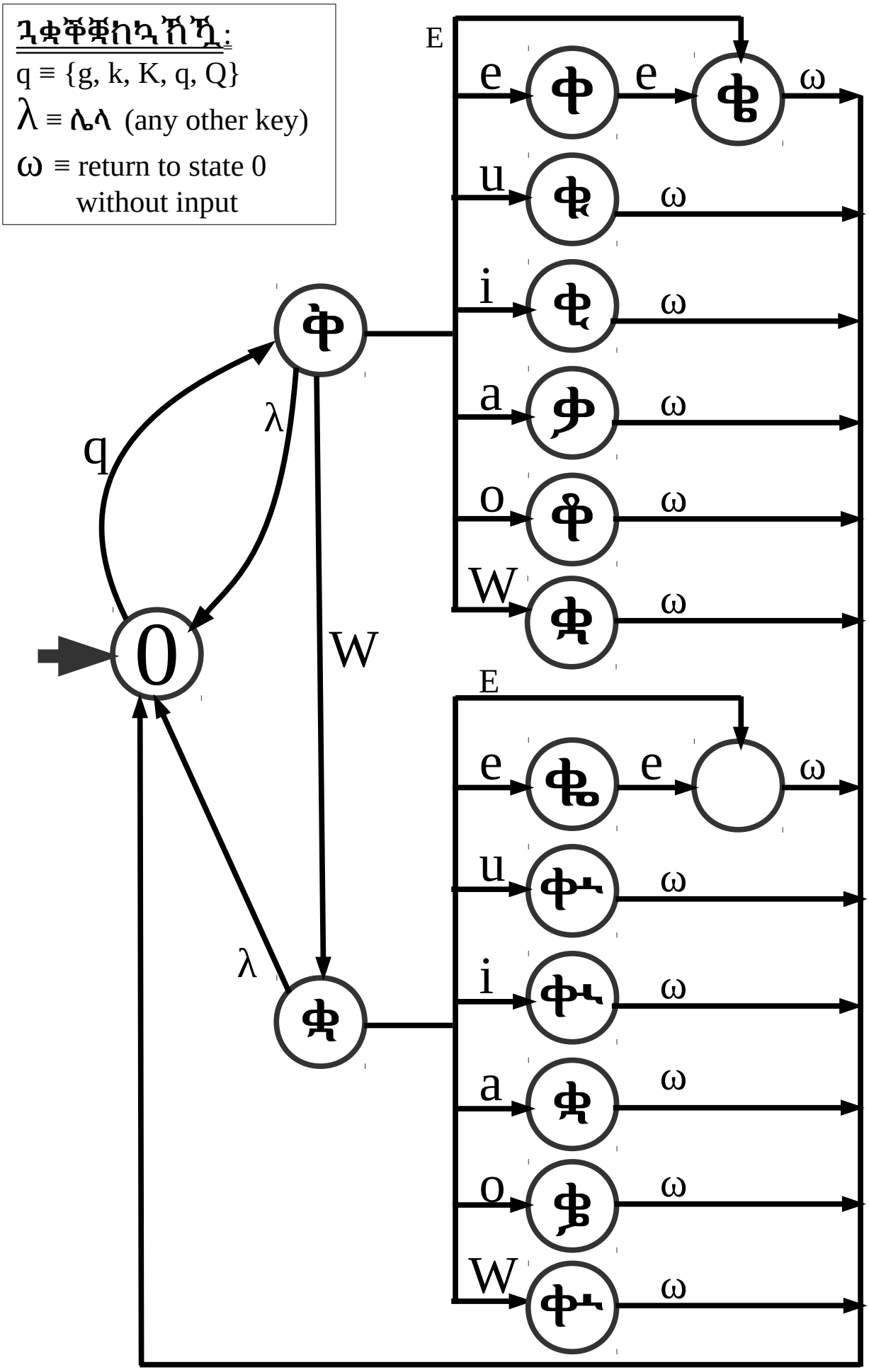
ጓቋቐቋከኳኸኺ:
q ≡ {g, k, K, q, Q}
λ ≡ ሌላ (any other key)
ω ≡ return to state 0
without input
E
e
e
ω
u
ω
i
ω
a
ω
o
ω
W
ω
q
λ
W
0
E
e
e
ω
u
ω
i
ω
a
ω
o
ω
W
ω
λ

CONSONANTS:

α ∈ A = {b|B, f|F, j|J, l|L, m|M, r|R, v|V, w|W, x|X, y|Y}
β ∈ B = {c, C, d, D, G, H, n , N, p, P, t, T, z, Z}
γ ∈ C = {g, k, K, q, Q}
δ ∈ D = {h, s, S}
λ ∈ A ∪ B ∪ C ∪ D
θ = λ – δ ⟺ θ ∈ A ∪ B ∪ C

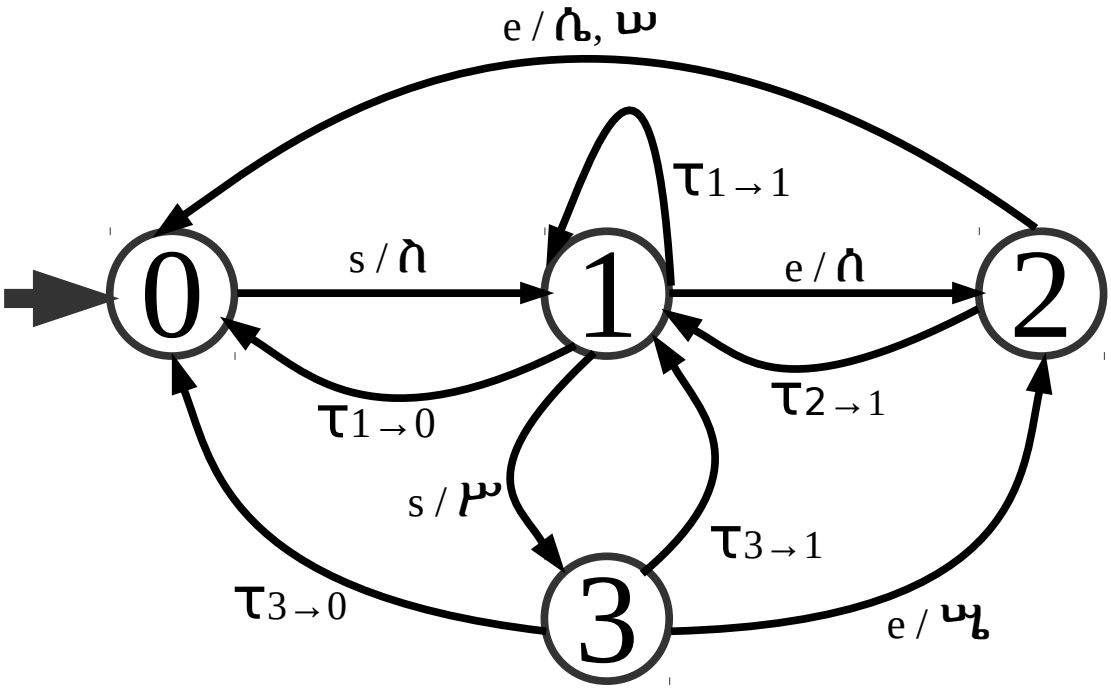

τ: STATE TRANSITIONS

τ(current_state, temp_output, next_input)→(output, next_state)

τ0→1 τ1→0 τ1→1 τ1→2 τ1→3

τ2→0 τ2→1

τ3→0 τ3→1 τ3→2

VOWELS:
ε ∈ {a, A, e, E, i, o, u}

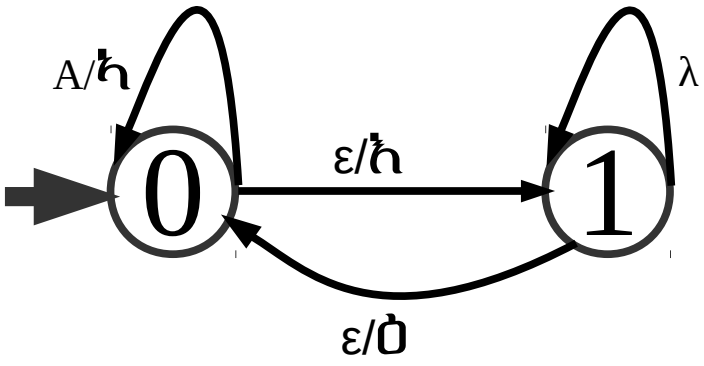

Initial State	Temporary Output	Input	Next State	Output	Action on Output
0	null	a	1	ሀ=anababi(a)	temp_out = a
0	null	e	1	ሀ=anababi(e)	temp_out = e
0	null	i	1	ሂ=anababi(i)	temp_out = i
0	null	o	1	ሆ=anababi(o)	temp_out = o
0	null	u	1	ሁ=anababi(u)	temp_out = u
0	null	A	0	ሃ=anababi(A)	temp_out = null
0	null	E	1	ሄ=anababi(E)	temp_out = E

Initial State	Temporary Output	Input	Next State	Output	Action on Output
1	anababi(a)	a	0	ᦷ	temp_out = null
1	anababi(a)	e	0	ᦵ	temp_out = null
1	anababi(e)	a	0	ᦶᦷ	temp_out = null
	anababi(e)	e	0	ᦵᦷ	temp_out = null
1	anababi(E)	E	0	ᦸ	temp_out = null
1	anababi(i)	i	0	ᦺ	temp_out = null
1	anababi(o)	o	0	ᦴ	temp_out = null
1	anababi(u)	u	0	ᦵᦸ	temp_out = null
1	anababi(ɛ)	λ	1	sadis(λ)	temp_out = sadis(λ)

Initial State	Temporary Output	Input	Next State	Output	Action on Output
0	null	λ	1	sadis(λ)	temp_out = out
1	sadis(λ)	a	0	rabee(λ)	temp_out = null
1	sadis(λ)	i	0	salis(λ)	temp_out = null
1	sadis(λ)	o	0	sabee(λ)	temp_out = null
1	sadis(λ)	u	0	kaeeb(λ)	temp_out = null
1	sadis(λ)	W	0	z_rabee(λ)	temp_out = null
1	sadis(λ)	Y	0	fia_mia(λ)	temp_out = null
1	sadis(λ)	E	0	hamis(λ)	temp_out = null
1	sadis(λ)	e	2	geez(λ)	temp_out = out
1	sadis(λ_1)	λ_2	1	sadis(λ_2)	temp_out = out
1	sadis(δ)	λ ≠ δ	1	sadis(λ)	temp_out = out
1	sadis(δ)	δ	3	sadis(δ^2)	temp_out = out
1	sadis(γ)	W	3	sadis(γW)	temp_out = out
2	geez(λ)	e	0	hamis(λ)	temp_out = null
2	geez(λ_1)	λ_2	1	sadis(λ_2)	temp_out = out

Initial State	Temporary Output	Input	Next State	Output	Action on Output
3	sadis(δ^2)	λ	1	sadis(λ)	temp_out = out
3	sadis(γW)	λ	1	sadis(λ)	temp_out = out
3	sadis(λ)	a	0	rabee(λ)	temp_out = null
3	sadis(λ)	i	0	salis(λ)	temp_out = null
3	sadis(λ)	o	0	sabee(λ)	temp_out = null
3	sadis(λ)	u	0	kaeeb(λ)	temp_out = null
3	sadis(λ)	W	0	z_rabee(λ)	temp_out = null
3	sadis(λ)	Y	0	fia_mia(λ)	temp_out = null
3	sadis(λ)	E	0	hamis(λ)	temp_out = null
3	sadis(λ)	e	2	geez(λ)	temp_out = out