VARDHAMAN
COLLEGE OF ENGINEERING

A Course End Project Report on

RFID-BASED ATTENDANCE SYSTEM USING ARDUINO

A8603- IoT Laboratory

Submitted by

Batch No. 17

C. N. S. Shivaani
(24881A05BE)
N. Prudvi Sai Yadav
(24881A05BF)
P. Vikram Bharadwaj
(24881A05BG)

Course Facilitator

Guruku Mamatha
Assistant Professor

Department of Computer Science and Engineering

Vardhaman College of Engineering,

Hyderabad

March 2026

DEPARTMENT OF COMPUTER SCIENCE AND ENGINEERING

This is to certify that the Course End Project titled **"RFID-Based Attendance System using Arduino"** is carried out by **"C. N. S. Shivaani", "N. Prudvi Sai Yadav" and "P. Vikram Bharadwaj" with** Roll Numbers **"24881A05BE", "24881A05BF" and "24881A05BG"** towards **A8603 – IoT Laboratory** course in partial fulfilment of the requirements for the award of degree of **Bachelor of Technology** in **Computer Science and Engineering** during the Academic year 2025-26.

Signature of the Course Faculty
Guruku Mamatha
Assistant Professor, CSE

Signature of the HOD
Dr. S. V. Vasantha
HOD, CSE

Contents

1 Introduction....3
2 Literature Review....3
3 Objectives....4
4 Methodology....4-8
4.1 Architectural Diagram....4
4.2 Hardware and Software Requirements....5
4.3 Working Principle....5-6
4.4 Software Implementation....6-8
5 Results and Discussion....8-9
6 Mapping POs and SDGs....9-10
6.1 Program Outcomes (POs) Mapping....9
6.2 Sustainable Development Goals (SDGs) Mapping....10
7 Conclusion....10
Bibliography....11

Abstract

The RFID-Based Attendance System using Arduino is designed to automate the traditional attendance process by utilizing radio frequency identification technology. In this system, each user is assigned a unique RFID tag or card, which is scanned using an RC522 RFID reader module. The Arduino Uno microcontroller processes the scanned data and verifies it against pre-stored IDs. Upon successful verification, the system marks attendance and displays a confirmation message on a 16x2 LCD screen. Additionally, a buzzer and LED indicators provide instant audio-visual feedback to the user.

The implementation of this project focuses on improving efficiency, accuracy, and reliability in attendance management systems. By eliminating manual entry, the chances of errors and proxy attendance are significantly reduced. The system is cost-effective, easy to implement, and suitable for applications in educational institutions and workplaces. Overall, this project demonstrates a practical use of embedded systems and IoT concepts to solve real-world problems in an efficient manner.

Keywords: RFID, Arduino Uno, Attendance System, RC522 Module, Automation, Embedded Systems, IoT, LCD Display, Security, Identification

1 Introduction

The RFID-Based Attendance System using Arduino is an advanced and efficient solution developed to overcome the limitations of traditional attendance recording methods. In many institutions and organizations, attendance is still marked manually using paper registers or basic digital entry systems, which can be time-consuming, labor-intensive, and prone to human errors such as incorrect entries or missed records. Additionally, manual systems are vulnerable to issues like proxy attendance, where one person marks attendance on behalf of another, reducing the reliability and authenticity of the data. To address these challenges, this project introduces an automated attendance system that utilizes RFID (Radio Frequency Identification) technology for accurate and contactless identification of individuals.

In this system, each user is provided with a unique RFID card or tag embedded with a distinct identification number. When the card is brought near the RFID reader, the system automatically detects and reads the information without requiring physical contact. The Arduino microcontroller processes this data and verifies it against a predefined database of authorized users. Once verified, the system records the attendance instantly and provides feedback through an LCD display, LEDs, and a buzzer. This automation not only reduces manual effort but also enhances speed, accuracy, and security, making the system highly suitable for modern educational institutions and workplaces.

2 Literature Review

RFID-based attendance systems have been widely studied and implemented as an efficient alternative to traditional manual attendance methods. Various research papers and technical reports highlight the use of RFID technology to automate identification processes in educational institutions and workplaces. These systems utilize RFID tags and readers to capture unique identification data, which is then processed by microcontrollers or computer systems. Compared to manual methods, RFID systems significantly reduce time consumption, human errors, and the possibility of proxy attendance, thereby improving overall system reliability and efficiency.

Existing methodologies for attendance management include biometric systems such as fingerprint and facial recognition, as well as barcode-based systems. While biometric systems provide high accuracy, they are often expensive and require complex hardware and maintenance. Barcode systems, on the other hand, are cost-effective but require direct line-of-sight scanning and are less durable.

Recent advancements in embedded systems and IoT have further enhanced RFID-based attendance solutions by integrating features such as real-time data storage, cloud connectivity, and remote monitoring. Many modern systems use microcontrollers like Arduino due to their low cost, ease of programming, and flexibility. Despite these improvements, challenges such as limited data storage, security concerns, and scalability still exist, creating opportunities for further research and development. This project builds upon these existing solutions by implementing a simple, cost-effective, and reliable RFID-based attendance system using Arduino.

3 Objectives

- To design and develop an automated attendance system using RFID technology and Arduino to replace traditional manual methods.
- To ensure accurate and reliable attendance recording by uniquely identifying each user through RFID tags, thereby reducing errors and proxy attendance.
- To provide a low-cost, efficient, and user-friendly solution with real-time feedback using LCD display, LEDs, and buzzer for better monitoring and usability.

4 Methodology

4.1 Architectural Diagram

The architectural diagram represents the overall structure and working of the RFID-Based Attendance System. The system begins with the RFID card or tag, which contains a unique identification number assigned to each user. When the card is brought near the RFID reader (RC522 module), the reader detects the tag and transmits the data to the Arduino Uno using SPI communication.

The Arduino Uno acts as the central processing unit, where the received ID is verified with stored data. If the ID is valid, the system marks attendance and sends signals to output components. The LCD display shows the attendance status, the green LED indicates success, and the buzzer provides an audio alert. If the ID is invalid, the red LED is activated. This architecture ensures smooth interaction between input, processing, and output components, resulting in an efficient and automated attendance system.

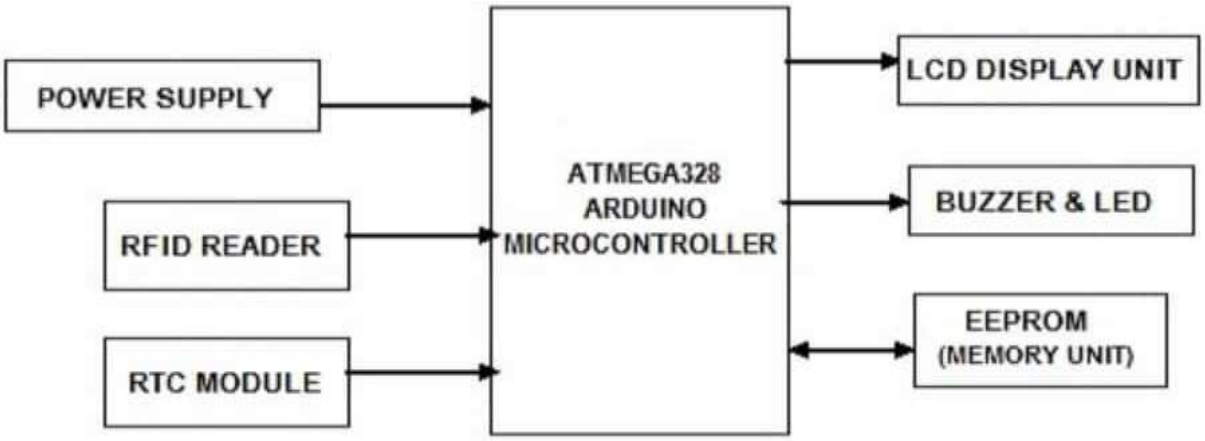

Figure 1: Architectural Diagram

4.2 Hardware and Software Requirements

- Hardware Requirements

  The following hardware components are required to implement the RFID-Based Attendance System:

  - Arduino UNO – Acts as the main microcontroller to process data
  - RFID Module (RC522) – Used to read RFID tags/cards
  - RFID Tags/Cards – Contain unique identification numbers for users
  - 16x2 LCD Display – Displays attendance status and messages
  - I2C Module – Reduces wiring for LCD communication
  - Buzzer – Provides audio indication for successful/failed scans
  - LEDs (Red and Green) – Indicate system status visually
  - Resistors (220Ω) – Used to limit current for LEDs
  - Breadboard – For circuit connections
  - Jumper Wires – For connecting components
  - Power Supply (USB/9V) – Provides power to the system
- Software Requirements

  The following software tools are used for developing and implementing the project:

  - Arduino IDE – Used for writing, compiling, and uploading code to Arduino
  - Embedded C/C++ – Programming language used for coding
  - RFID Library (MFRC522) – Enables communication with RFID module
  - LiquidCrystal_I2C Library – Used to control the LCD display
  - Operating System (Windows/Linux) – Platform to run Arduino IDE
  - Serial Monitor – Used for debugging and displaying RFID data

4.3 Working Principle

The RFID-Based Attendance System works on the principle of wireless identification using radio frequency signals. Each user is assigned an RFID tag that contains a unique identification number. When the RFID tag is brought near the RFID reader (RC522 module), the reader generates an electromagnetic field that activates the tag. The tag then transmits its stored unique ID back to the reader without any physical contact. This data is sent to the Arduino Uno through SPI communication for further processing.

The Arduino acts as the central controller of the system. It receives the tag ID from the RFID reader and compares it with a list of pre-stored authorized IDs in its memory. If a match is found, the system marks the attendance as valid. The Arduino then triggers output devices such as displaying a confirmation message on the LCD screen, turning on the green LED, and activating the buzzer to indicate successful attendance. If the ID does not match, the system denies access and turns on the red LED as an alert.

This working principle ensures a fast, accurate, and contactless attendance process. It eliminates manual errors, reduces the chances of proxy attendance, and provides real-time feedback to users. The integration of input (RFID reader), processing (Arduino), and output devices (LCD, LEDs, buzzer) makes the system efficient and reliable for practical applications in institutions and organizations.

4.4 Software Implementation

Algorithm:

- Start the system and initialize RFID module, SPI, LEDs, and buzzer.
- Wait for an RFID card to be detected.
- Read the UID of the scanned card and convert it into a string format.
- Compare the scanned UID with stored valid UIDs.
- If the UID matches:
  - Turn ON green LED
  - Activate buzzer
  - Display “Access Granted” on Serial Monitor
- Else:
  - Turn ON red LED
  - Activate buzzer
  - Display “Access Denied”
- Wait for a short duration and turn OFF all outputs.
- Repeat the process for the next card.

Pseudo Code:

```
#include <SPI.h>
#include <MFRC522.h>
#define SS_PIN 10
#define RST_PIN 9
#define GREEN_LED 5
#define RED_LED 6
#define BUZZER 4
```

```
MFRC522 mfrc522(SS_PIN, RST_PIN);

// Your card UIDs
String card1 = "9A 04 02 35"; // Shivaani
String card2 = "0C F3 12 07"; // Prudvi
String card3 = "1A E8 54 30"; // Vikram

void setup() {
  Serial.begin(9600);
  SPI.begin();
  mfrc522.PCD_Init();

  pinMode(GREEN_LED, OUTPUT);
  pinMode(RED_LED, OUTPUT);
  pinMode(BUZZER, OUTPUT);

  Serial.println("RFID System Ready");
  Serial.println("Scan your card...");
}

void loop() {

  // Wait for card
  if (!mfrc522.PICC_IsNewCardPresent()) return;
  if (!mfrc522.PICC_ReadCardSerial()) return;

  String uid = "";
  for (byte i = 0; i < mfrc522.uid.size; i++) {
    if (mfrc522.uid.uidByte[i] < 0x10) uid += "0";
    uid += String(mfrc522.uid.uidByte[i], HEX);
    if (i < mfrc522.uid.size - 1) uid += " ";
  }

  uid.toUpperCase();

  Serial.print("UID: ");
  Serial.println(uid);

  // Reset outputs
  digitalWrite(GREEN_LED, LOW);
  digitalWrite(RED_LED, LOW);
  noTone(BUZZER);

  // Check cards
  if (uid == card1) {
    Serial.println("Shivaani Present ");

    digitalWrite(GREEN_LED, HIGH);
    tone(BUZZER, 1000);
```

```
  }
  else if (uid == card2) {
    Serial.println("Prudvi Present ");
    digitalWrite(GREEN_LED, HIGH);
    tone(BUZZER, 1000);
  }
  else if (uid == card3) {
    Serial.println("Vikram Present ");
    digitalWrite(GREEN_LED, HIGH);
    tone(BUZZER, 1000);
  }
  else {
    Serial.println("Unknown Card ");
    digitalWrite(RED_LED, HIGH);
    tone(BUZZER, 200);
  }

  delay(1500);
  // Turn off
  digitalWrite(GREEN_LED, LOW);
  digitalWrite(RED_LED, LOW);
  noTone(BUZZER);
  Serial.println("---------------------");
  delay(500);
}
```

5 Results and Discussion

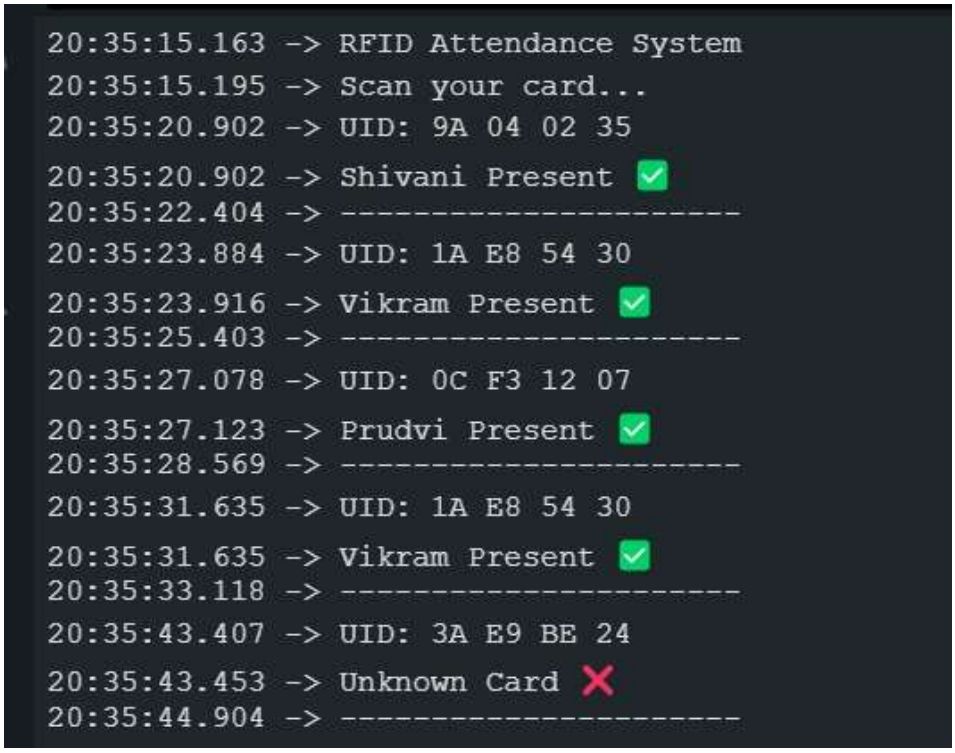

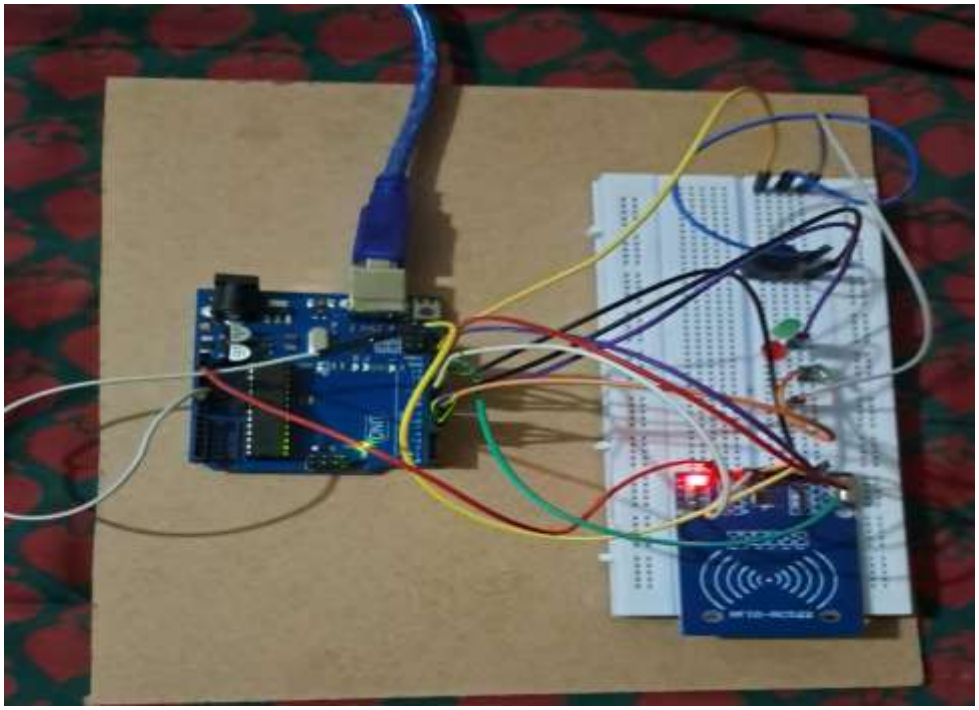

Interpretation – The results show that RFID technology is effective for automating attendance systems. It reduces manual errors and prevents unauthorized access. This confirms the practicality of using embedded systems in real-world applications.

Achievement of objectives –All the objectives of the project were successfully achieved. The system automates attendance, ensures accurate identification, and provides real-time feedback. It meets the goal of being low-cost and efficient.

Implications –The system can be used in schools, colleges, and offices for efficient attendance management. It helps save time and improves accuracy in record-keeping. With enhancements, it can be extended to larger applications like access control and smart systems.

6 Mapping POs and SDGs

6.1 Program Outcomes (POs) Mapping

Table 1: Mapping of Program Outcomes (POs) to Project Relevance

PO No.	Program Outcome	Relevance
PO1	Engineering Knowledge	Applied knowledge of Arduino, RFID, and embedded systems to build the project.
PO2	Problem Analysis	Identified limitations of manual attendance and provided an automated solution.
PO3	Design/Development of Solutions	Designed and implemented the RFID-based attendance system.
PO5	Engineering Tool Usage	Used Arduino IDE, RFID module, and electronic components effectively.

6.2 Sustainable Development Goals (SDGs) Mapping

Table 2: Mapping of Sustainable Development Goals (SDGs) to Project Relevance

SDG No.	Goal	Relevance
SDG 4	Quality Education	The system improves attendance management in educational institutions by ensuring accuracy and saving time, contributing to better learning environments.
SDG 8	Decent Work and Economic Growth	Automating attendance increases efficiency in workplaces and institutions, reducing manual effort and improving productivity.
SDG 9	Industry, Innovation and Infrastructure	The project promotes innovation by using RFID and embedded systems to develop a smart and automated solution.
SDG 16	Peace, Justice and Strong Institutions	The system ensures transparency and prevents proxy attendance, supporting fair and reliable record-keeping.

7 Conclusion

The RFID-Based Attendance System using Arduino was successfully designed and implemented to automate the traditional attendance process. The system efficiently reads RFID tags, verifies user identity, and provides immediate feedback through LEDs, buzzer, and serial output. It eliminates manual errors, reduces time consumption, and prevents proxy attendance, making the process more reliable and secure. The integration of RFID technology with Arduino demonstrates a practical and cost-effective solution suitable for educational institutions and workplaces.

Future Work:

The project can be further enhanced by integrating additional features such as storing attendance data in a database or cloud for long-term record keeping and analysis. The system can also be improved by adding a real-time clock (RTC) module to track date and time accurately. Furthermore, implementing IoT-based monitoring, mobile app integration, or biometric authentication can increase security and usability. Expanding the system to support a larger number of users and improving data security mechanisms are also important areas for future development.

Bibliography

[1] K. Finkenzeller, *RFID Handbook: Fundamentals and Applications in Contactless Smart Cards and Identification*, 2nd ed. New York, NY, USA: Wiley, 2010.

[2] S. A. Ahson and M. Ilyas, *RFID Handbook: Applications, Technology, Security, and Privacy*. Boca Raton, FL, USA: CRC Press, 2008.

[3] A. Want, "An introduction to RFID technology," *IEEE Pervasive Computing*, vol. 5, no. 1, pp. 25–33, Jan.–Mar. 2006.

[4] J. Landt, "The history of RFID," *IEEE Potentials*, vol. 24, no. 4, pp. 8–11, Oct.–Nov. 2005.

[5] Arduino, "Arduino Uno Rev3," [Online]. Available: https://www.arduino.cc/

[6] M. Balboa, "MFRC522 RFID Library for Arduino," [Online]. Available: https://github.com/miguelbalboa/rfid

[7] Circuit Digest, "RFID based attendance system using Arduino," [Online]. Available: https://circuitdigest.com/

[8] Electronics Hub, "RFID based attendance system project," [Online]. Available: https://www.electronicshub.org/