A356
MAST SYSTEM

A356-5
NARROW AISLE HYD. COMPONENTS-FIXED STAGE

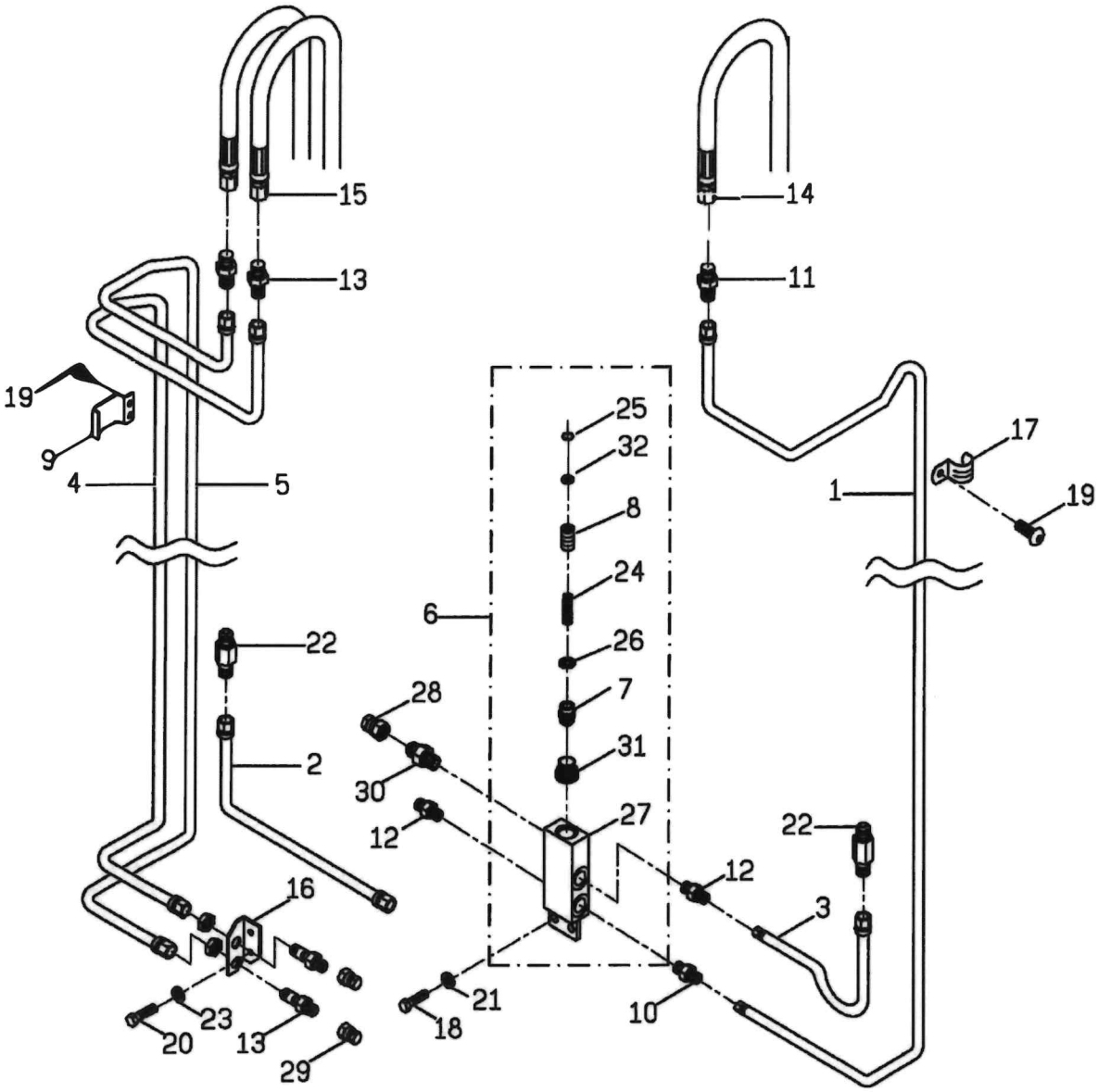

A356
MAST SYSTEM

A356-5
NARROW AISLE HYD. COMPONENTS-FIXED STAGE

NO.	PART NAME					NA2.0				FLEXI											
																	ACiON				
	NEW PART NO.	OLD PART NO.	ITC	APPLIED DATE	量 QTY	DC G3	DC G4	AC G4	ACE	DC G3	DC G4	G4	VNA 1200	DC G3	DC G4	AC G4	1200	VNA 1200	BODY NO.	REMARK
						A	B	C	D	E	F	G	H	I	J	K	L	M		
1	(FREE LIFT FEED PIPE)																			
	35121				1	A	B	C	D	E	F	G		I	J	K	L			4050MM
	34893				1	A	B	C	D	E	F	G		I	J	K	L			4200MM
	34884				1	A	B	C	D	E	F	G		I	J	K	L			4620MM
	35038				1	A	B	C	D	E	F	G		I	J	K	L			4800MM
	34890				1	A	B	C	D	E	F	G		I	J	K	L			5010MM
	35102				1	A	B	C	D	E	F	G		I	J	K	L			5400MM
	30350				1	A	B	C	D	E	F	G		I	J	K	L			5550MM
	34887				1	A	B	C	D	E	F	G		I	J	K	L			6000MM
	35069				1	A	B	C	D	E	F	G		I	J	K	L			6210MM
	30355				1	A	B	C	D	E	F	G		I	J	K	L			6600MM
	34881				1	A	B	C	D	E	F	G		I	J	K	L			7020MM
	34878				1	A	B	C	D	E	F	G		I	J	K	L			7200MM
	30358				1	A	B	C	D	E	F	G		I	J	K	L			7410MM
	34977				1	A	B	C	D	E	F	G		I	J	K	L			7620MM
	34870				1	A	B	C	D	E	F	G		I	J	K	L			8010MM
	35066				1	A	B	C	D	E	F	G		I	J	K	L			8220MM
	30364				1	A	B	C	D	E	F	G		I	J	K	L			8400MM
	34992				1	A	B	C	D	E	F	G		I	J	K	L			8610MM
	35118				1	A	B	C	D	E	F	G		I	J	K	L			8820MM
	35035				1	A	B	C	D	E	F	G		I	J	K	L			9000MM
2	(MAIN LIFT FEED PIPE)																			
	30308				1	A	B	C	D	E	F	G		I	J	K	L			4050MM
	30308				1	A	B	C	D	E	F	G		I	J	K	L			4200MM
	30308				1	A	B	C	D	E	F	G		I	J	K	L			4620MM
	30308				1	A	B	C	D	E	F	G		I	J	K	L			4800MM
	30308				1	A	B	C	D	E	F	G		I	J	K	L			5010MM
	30308				1	A	B	C	D	E	F	G		I	J	K	L			5400MM
	30308				1	A	B	C	D	E	F	G		I	J	K	L			5550MM
	30308				1	A	B	C	D	E	F	G		I	J	K	L			6000MM
	30308				1	A	B	C	D	E	F	G		I	J	K	L			6210MM
	30308				1	A	B	C	D	E	F	G		I	J	K	L			7200MM

升降系統
A356
MAST SYSTEM

A356-5

NARROW AISLE HYD. COMPONENTS-FIXED STAGE

NO.	PART NAME					NA2.0				FLEXI									BODY NO.	REMARK
																	ACiON			
	NEW PART NO.	OLD PART NO.	ITC	APPLIED DATE	量 QTY	DC G3	DC G4	AC G4	ACE	DC G3	DC G4	G4	VNA 1200	DC G3	DC G4	AC G4	1200	VNA 1200		
						A	B	C	D	E	F	G	H	I	J	K	L	M		
2	(MAIN LIFT FEED PIPE)																			
	30308				1	A	B	C	D	E	F	G		I	J	K	L			7410MM
	30310				1	A	B	C	D	E	F	G		I	J	K	L			6600MM
	30310				1	A	B	C	D	E	F	G		I	J	K	L			7020MM
	30310				1	A	B	C	D	E	F	G		I	J	K	L			7620MM
	30310				1	A	B	C	D	E	F	G		I	J	K	L			8010MM
	35209				1	A	B	C	D	E	F	G		I	J	K	L			8220MM
	35209				1	A	B	C	D	E	F	G		I	J	K	L			8400MM
	35209				1	A	B	C	D	E	F	G		I	J	K	L			8610MM
	35209				1	A	B	C	D	E	F	G		I	J	K	L			8820MM
	35209				1	A	B	C	D	E	F	G		I	J	K	L			9000MM
3	(MAIN LIFT FEED PIPE)																			
	30309				1	A	B	C	D	E	F	G		I	J	K	L			4050MM
	30309				1	A	B	C	D	E	F	G		I	J	K	L			4200MM
	30309				1	A	B	C	D	E	F	G		I	J	K	L			4620MM
	30309				1	A	B	C	D	E	F	G		I	J	K	L			4800MM
	30309				1	A	B	C	D	E	F	G		I	J	K	L			5010MM
	30309				1	A	B	C	D	E	F	G		I	J	K	L			5400MM
	30309				1	A	B	C	D	E	F	G		I	J	K	L			5550MM
	30309				1	A	B	C	D	E	F	G		I	J	K	L			6000MM
	30309				1	A	B	C	D	E	F	G		I	J	K	L			6210MM
	30309				1	A	B	C	D	E	F	G		I	J	K	L			7200MM
	30309				1	A	B	C	D	E	F	G		I	J	K	L			7410MM
	30311				1	A	B	C	D	E	F	G		I	J	K	L			6600MM
	30311				1	A	B	C	D	E	F	G		I	J	K	L			7020MM
	30311				1	A	B	C	D	E	F	G		I	J	K	L			7620MM

A356-5

NARROW AISLE HYD. COMPONENTS-FIXED STAGE

NO.	PART NAME					NA2.0				FLEXI										BODY NO.	REMARK
												AC						ACiON			
						DC		AC	ACE	DC		G4	VNA 1200	DC		AC	1200	VNA 1200			
	NEW PART NO.	OLD PART NO.	ITC	APPLIED DATE	QTY	G3	G4	G4		G3	G4			G3	G4	G4					
						A	B	C	D	E	F	G	H	I	J	K	L	M			
3	(MAIN LIFT FEED PIPE)																				
	30311				1	A	B	C	D	E	F	G		I	J	K	L				8010MM
	35210				1	A	B	C	D	E	F	G		I	J	K	L				8220MM
	35210				1	A	B	C	D	E	F	G		I	J	K	L				8400MM
	35210				1	A	B	C	D	E	F	G		I	J	K	L				8610MM
	35210				1	A	B	C	D	E	F	G		I	J	K	L				8820MM
	35210				1	A	B	C	D	E	F	G		I	J	K	L				9000MM
4	(SIDE-SHIFT FEED PIPE)																				
	35119				1	A	B	C	D	E	F	G		I	J	K	L				4050MM
	34891				1	A	B	C	D	E	F	G		I	J	K	L				4200MM
	34882				1	A	B	C	D	E	F	G		I	J	K	L				4620MM
	35132				1	A	B	C	D	E	F	G		I	J	K	L				4800MM
	34888				1	A	B	C	D	E	F	G		I	J	K	L				5010MM
	35100				1	A	B	C	D	E	F	G		I	J	K	L				5400MM
	30353				1	A	B	C	D	E	F	G		I	J	K	L				5550MM
	34885				1	A	B	C	D	E	F	G		I	J	K	L				6000MM
	35067				1	A	B	C	D	E	F	G		I	J	K	L				6210MM
	30356				1	A	B	C	D	E	F	G		I	J	K	L				6600MM
	34879				1	A	B	C	D	E	F	G		I	J	K	L				7020MM
	34874				1	A	B	C	D	E	F	G		I	J	K	L				7200MM
	30362				1	A	B	C	D	E	F	G		I	J	K	L				7410MM
	34975				1	A	B	C	D	E	F	G		I	J	K	L				7620MM
	34868				1	A	B	C	D	E	F	G		I	J	K	L				8010MM
	35064				1	A	B	C	D	E	F	G		I	J	K	L				8220MM
	30367				1	A	B	C	D	E	F	G		I	J	K	L				8400MM
	35097				1	A	B	C	D	E	F	G		I	J	K	L				8610MM

A356-5

NARROW AISLE HYD. COMPONENTS-FIXED STAGE

NO.	PART NAME																				
						NA2.0				FLEXI											
												AC					ACiON				
						DC		AC	ACE	DC		G4	VNA 1200	DC		AC	1200	VNA 1200		
	NEW PART NO.	OLD PART NO.	ITC	APPLIED DATE	量 QTY	G3	G4	G4		G3	G4			G3	G4	G4			BODY NO.	REMARK
						A	B	C	D	E	F	G	H	I	J	K	L	M		
4	(SIDE-SHIFT FEED PIPE)																			
	35116				1	A	B	C	D	E	F	G		I	J	K	L			8820MM
	35033				1	A	B	C	D	E	F	G		I	J	K	L			9000MM
5	(SIDE-SHIFT FEED PIPE)																			
	35120				1	A	B	C	D	E	F	G		I	J	K	L			4050MM
	34892				1	A	B	C	D	E	F	G		I	J	K	L			4200MM
	34883				1	A	B	C	D	E	F	G		I	J	K	L			4620MM
	35133				1	A	B	C	D	E	F	G		I	J	K	L			4800MM
	34889				1	A	B	C	D	E	F	G		I	J	K	L			5040MM
	35101				1	A	B	C	D	E	F	G		I	J	K	L			5400MM
	30354				1	A	B	C	D	E	F	G		I	J	K	L			5550MM
	34886				1	A	B	C	D	E	F	G		I	J	K	L			6000MM
	35068				1	A	B	C	D	E	F	G		I	J	K	L			6240MM
	30357				1	A	B	C	D	E	F	G		I	J	K	L			6600MM
	34880				1	A	B	C	D	E	F	G		I	J	K	L			7020MM
	34877				1	A	B	C	D	E	F	G		I	J	K	L			7200MM
	30363				1	A	B	C	D	E	F	G		I	J	K	L			7440MM
	34976				1	A	B	C	D	E	F	G		I	J	K	L			7620MM
	34869				1	A	B	C	D	E	F	G		I	J	K	L			8040MM
	35065				1	A	B	C	D	E	F	G		I	J	K	L			8220MM
	30368				1	A	B	C	D	E	F	G		I	J	K	L			8400MM
	35098				1	A	B	C	D	E	F	G		I	J	K	L			8640MM
	35117				1	A	B	C	D	E	F	G		I	J	K	L			8820MM
	35034				1	A	B	C	D	E	F	G		I	J	K	L			9000MM
6	(MANIFOLD)																			
	NOT AVAILABLE				1	A	B	C		E	F	G		I	J	K				see no 7, no 27

A356
MAST SYSTEM

A356-5

NARROW AISLE HYD. COMPONENTS-FIXED STAGE

NO.	PART NAME					NA2.0				FLEXI									BODY NO.	REMARK
												AC					ACiON			
						DC		AC	ACE	DC		G4	VNA 1200	DC		AC	1200	VNA 1200		
	NEW PART NO.	OLD PART NO.	性 ITC	APPLIED DATE	量 QTY	G3	G4	G4		G3	G4			G3	G4	G4				
						A	B	C	D	E	F	G	H	I	J	K	L	M		
7	(FLOW CONTROL VALVE)																			
	4971.05.000				1	A	B	C		E	F	G		I	J	K				
8	(BLANKING PLUG)																			
	44057.17.000				1	A	B	C		E	F	G		I	J	K				
9	(8MM PIPE CLAMP)																			
	4627.04.000				2	A	B	C	D	E	F	G		I	J	K	L			
10	(CONNECTOR)(DUAL PIPE)																			
	33828A				1	A	B	C	D	E	F	G		I	J	K	L			
11	(CONNECTOR)(DUAL PIPE)																			
	35477				1	A	B	C	D	E E	F	G		I	J	K	L			
12	(CONNECTOR)(DUAL PIPE)																			
	M0601022				2	A	B	C	D	E	F	G		I	J	K	L			
13	(CONNECTOR)(DUAL PIPE)																			
	35481				4	A	B	C	D	E	F F	G		I	J	K	L			

A356
MAST SYSTEM

A356-5

NARROW AISLE HYD. COMPONENTS-FIXED STAGE

NO.	PART NAME					NA2.0				FLEXI										BODY NO.	REMARK
																	ACiON				
	NEW PART NO.	OLD PART NO.	ITC	APPLIED DATE	QTY	DC G3	DC G4	AC G4	ACE	DC G3	DC G4	G4	VNA 1200	DC G3	DC G4	AC G4	1200	VNA 1200		
						A	B	C	D	E	F	G	H	I	J	K	L	N		
14	(FREE LIFT HOSE)																				
	42393.34				1	A	B	C	D	E	F	G		I	J	K	L				4050MM
	42393.04				1	A	B	C	D	E	F	G		I	J	K	L				4200MM
	42393.06				1	A	B	C	D	E	F	G		I	J	K	L				4620MM
	42393.45				1	A	B	C	D	E	F	G		I	J	K	L				4800MM
	42393.08				1	A	B	C	D	E	F	G		I	J	K	L				5010MM
	42393.10				1	A	B	C	D	E	F	G		I	J	K	L				5400MM
	42393.01				1	A	B	C	D	E	F	G		I	J	K	L				5550MM
	42393.13				1	A	B	C	D	E	F	G		I	J	K	L				6000MM
	42393.14				1	A	B	C	D	E	F	G		I	J	K	L				6210MM
	42393.16				1	A	B	C	D	E	F	G		I	J	K	L				6600MM
	42393.18				1	A	B	C	D	E	F	G		I	J	K	L				7020MM
	42393.19				1	A	B	C	D	E	F	G		I	J	K	L				7200MM
	42393.20				1	A	B	C	D	E	F	G		I	J	K	L				7410MM
	42393.21				1	A	B	C	D	E	F	G		I	J	K	L				7620MM
	42393.23				1	A	B	C	D	E	F	G		I	J	K	L				8010MM
	42393.24				1	A	B	C	D	E	F	G		I	J	K	L				8220MM
	42393.25				1	A	B	C	D	E	F	G		I	J	K	L				8400MM
	42393.26				1	A	B	C	D	E	F	G		I	J	K	L				8610MM
	42393.27				1	A	B	C	D	E	F	G		I	J	K	L				8820MM
	42393.28				1	A	B	C	D	E	F	G		I	J	K	L				9000MM
15	(SIDESHIFT HOSE)																				
	42398.34				2	A	B	C	D	E	F	G		I	J	K	L				4050MM
	42398.04				2	A	B	C	D	E	F	G		I	J	K	L				4200MM
	42398.06				2	A	B	C	D	E	F	G		I	J	K	L				4620MM
	42398.45				2	A	B	C	D	E	F	G		I	J	K	L				4800MM
	42398.08				2	A	B	C	D	E	F	G		I	J	K	L				5010MM
	42398.10				2	A	B	C	D	E	F	G		I	J	K	L				5400MM
	42398.01				2	A	B	C	D	E	F	G		I	J	K	L				5550MM
	42398.13				2	A	B	C	D	E	F	G		I	J	K	L				6000MM
	42398.14				2	A	B	C	D	E	F	G		I	J	K	L				6210MM
	42398.16				2	A	B	C	D	E	F	G		I	J	K	L				7200MM

A356-5

NARROW AISLE HYD. COMPONENTS-FIXED STAGE

NO.	PART NAME					NA2.0				FLEXI										BODY NO.	REMARK
																	ACiON				
	NEW PART NO.	OLD PART NO.	ITC	APPLIED DATE	QTY	DC G3	DC G4	AC G4	ACE	DC G3	DC G4	G4	VNA 1200	DC G3	DC G4	AC G4	1200	VNA 1200		
						A	B	C	D	E	F	G	H	I	J	K	L	M		
15	(SIDESHIFT HOSE)																				
	42398.18				2	A	B	C	D	E	F	G		I	J	K	L				7410MM
	42398.19				2	A	B	C	D	E	F	G		I	J	K	L				6600MM
	42398.20				2	A	B	C	D	E	F	G		I	J	K	L				7020MM
	42398.21				2	A	B	C	D	E	F	G		I	J	K	L				7620MM
	42398.23				2	A	B	C	D	E	F	G		I	J	K	L				8010MM
	42398.24				2	A	B	C	D	E	F	G		I	J	K	L				8220MM
	42398.25				2	A	B	C	D	E	F	G		I	J	K	L				8400MM
	42398.26				2	A	B	C	D	E	F	G		I	J	K	L				8610MM
	42398.27				2	A	B	C	D	E	F	G		I	J	K	L				8820MM
	42398.28				2	A	B	C	D	E	F	G		I	J	K	L				9000MM

A356
MAST SYSTEM

A356-5

NARROW AISLE HYD. COMPONENTS-FIXED STAGE

NO.	PART NAME																				
	NEW PART NO.	OLD PART NO.	ITC	APPLIED DATE	量 QTY	NA2.0				FLEXI									BODY NO.	1 REMARK
												AC					ACiON			
						DC		AC	ACE	DC		G4	VNA 1200	DC		AC	1200	VNA 1200		
						G3	G4	G4		G3	G4			G3	G4	G4				
						A	B	C	D	E	F	G	H	I	J	K	L	M		
16	(BULKHEAD BRACKET)																			
	41451.00				1	A	B	C	D	E	F	G		I	J	K	L			
17	(PIPE CLAMP)																			
	4627.05.000		↕		4	A	B	C C	D	E	F	G G		I	J	K K	L L			
18	(BOLT)																			
	6111.08.020				2	A	B	C	D	E	F	G		I	J	K	L			
19	(BUTTON HEAD SCREW)																			
	6610.01.000				3	A	B	C	D	E	F	G		I	J	K	L			
20	(BOLT)																			
	6111.06.016				2	A	B	C	D	E	F	G		I	J	K	L			
21	(SPRING WASHER)																			
	6120.08.000				2	A	B	C	D	E	F	G		I	J	K	L			
22	(CONNECTOR)																			
	33639				1	A	B	C		E	F	G		I	J	K				
23	(SPRING WASHER)																			
	6120.06.000				2	A	B	C		E	F	G		I	J	K				停用(NOT USED)
24	(SPRING)																			
	NOT AVAILABLE				1	A	B	C		E	F	G		I	J	K				see no 7
25	(O RING)																			
	NOT AVAILABLE				1	A	B	C	D	E	F	G		I	J	K	L			see no 7
26	(SNAP RING)																			
	NOT AVAILABLE				1 1			C	D	E	F F	G					L			see no 7
27	(MANIFOLD)																			
	41437.00				1			C	D	E	F	G					L			
28	(CONNECTOR)																			
	35475				1			C	D	E	F	G					L			
29	(CONNECTOR)																			
	35473				2	A	B	C	D	E	F	G		I	J	K	L			
30	(CONNECTOR)																			
	35456				1	A	B	C		E	F	G		I	J	K				

A356
MAST SYSTEM

A356-5

NARROW AISLE HYD. COMPONENTS-FIXED STAGE

NO.	PART NAME					NA2.0				FLEXI									BODY NO.	REMARK
						DC		AC	ACE	DC		AC		DC		AC	ACiON			
	NEW PART NO.	OLD PART NO.	性 ITC	APPLIED DATE	量 QTY	G3	G4	G4		G3	G4	G4	VNA 1200	G3	G4	G4	1200	VNA 1200		
						A	B	C	D	E	F	G	H	I	J	K	L	M		
31	(PLUG)																			
	NOT AVAILABLE				1	A	B	C		E	F	G		I	J	K				See no 7
32	(RING)																			
	NOT AVAILABLE				1	A	B	C		E	F	G		I	J	K				See no 7