A356
MAST SYSTEM

A356-6
NARROW AISLE HYD. COMPONENTS-THIRD STAGE

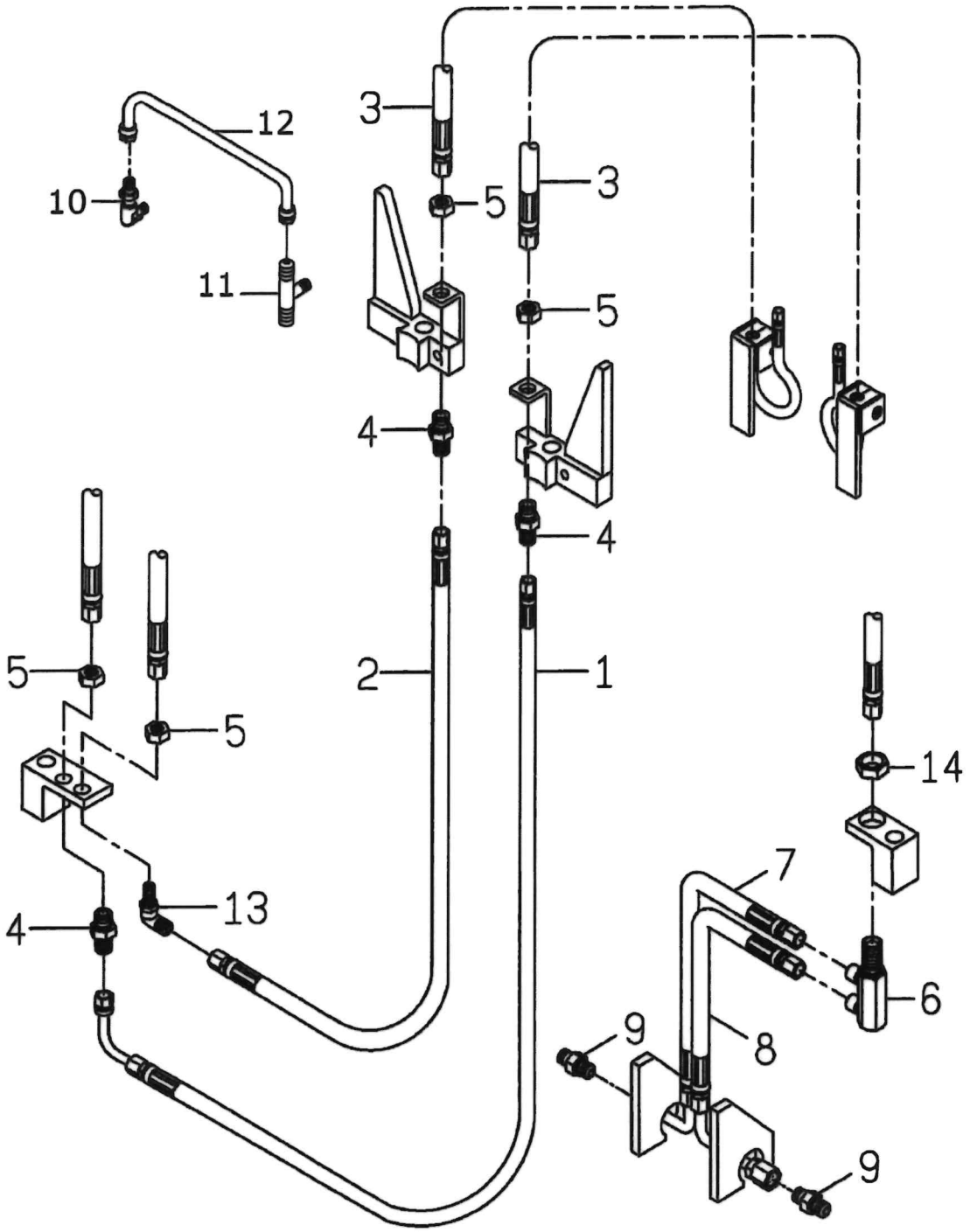

A356
MAST SYSTEM

A356-6
NARROW AISLE HYD. COMPONENTS-FIXED STAGE

NO.	PART NAME					NA2.0				FLEXI									BODY NO.	REMARK
																	ACION			
						DC		AC	ACE	DC		G4	VNA 1200	DC		AC	1200	VNA 1200		
	NEW PART NO.	OLD PART NO.	ITC	APPLIED DATE	QTY	G3	G4	G4		G3	G4			G3	G4	G4				
						A	B	C	D	E	F	G	H	I	J	K	L	N		
1	(SIDESHIFT HOSE 3RD STAGE)																			
	42495.34				1	A	B	C	D	E	F	G		I	J	K	L			4050MM
	42495.04				1	A	B	C	D	E	F	G		I	J	K	L			4200MM
	42495.06				1	A	B	C	D	E	F	G		I	J	K	L			4620MM
	42495.45				1	A	B	C	D	E	F	G		I	J	K	L			4800MM
	42495.08				1	A	B	C	D	E	F	G		I	J	K	L			5010MM
	42495.10				1	A	B	C	D	E	F	G		I	J	K	L			5400MM
	42495.01				1	A	B	C	D	E	F	G		I	J	K	L			5550MM
	42495.13				1	A	B	C	D	E	F	G		I	J	K	L			6000MM
	42495.14				1	A	B	C	D	E	F	G		I	J	K	L			6210MM
	42495.16				1	A	B	C	D	E	F	G		I	J	K	L			6600MM
	42495.18				1	A	B	C	D	E	F	G		I	J	K	L			7020MM
	42495.19				1	A	B	C	D	E	F	G		I	J	K	L			7200MM
	42495.20				1	A	B	C	D	E	F	G		I	J	K	L			7410MM
	42495.21				1	A	B	C	D	E	F	G		I	J	K	L			7620MM
	42495.23				1	A	B	C	D	E	F	G		I	J	K	L			8010MM
	42495.24				1	A	B	C	D	E	F	G		I	J	K	L			8220MM
	42495.25				1	A	B	C	D	E	F	G		I	J	K	L			8400MM
	42495.26				1	A	B	C	D	E	F	G		I	J	K	L			8610MM
	42495.27				1	A	B	C	D	E	F	G		I	J	K	L			8820MM
	42495.28				1	A	B	C	D	E	F	G		I	J	K	L			9000MM
2	(SIDESHIFT HOSE 3RD STAGE)																			
	42494.34				2	A	B	C	D	E	F	G		I	J	K	L			4050MM
	42494.04				2	A	B	C	D	E	F	G		I	J	K	L			4200MM
	42494.06				2	A	B	C	D	E	F	G		I	J	K	L			4620MM
	42494.45				2	A	B	C	D	E	F	G		I	J	K	L			4800MM
	42494.08				2	A	B	C	D	E	F	G		I	J	K	L			5010MM
	42494.10				2	A	B	C	D	E	F	G		I	J	K	L			5400MM
	42494.01				2	A	B	C	D	E	F	G		I	J	K	L			5550MM
	42494.13				2	A	B	C	D	E	F	G		I	J	K	L			6000MM
	42494.14				2	A	B	C	D	E	F	G		I	J	K	L			6210MM
	42494.16				2	A	B	C	D	E	F	G		I	J	K	L			7200MM

A356
MAST SYSTEM

A356-6
NARROW AISLE HYD. COMPONENTS-FIXED STAGE

NO.	PART NAME					NA2.0				FLEXI									BODY NO.	REMARK
																	ACiON			
	NEW PART NO.	OLD PART NO.	ITC	APPLIED DATE	QTY	DC G3	DC G4	AC G4	ACE	DC G3	DC G4	G4	VNA 1200	DC G3	DC G4	AC G4	1200	VNA 1200		
						A	B	C	D	E	F	G	H	I	J	K	L	M		
2	(SIDESHIFT HOSE RD STAGE)																			
	42494.18				2	A	B	C	D	E	F	G		I	J	K	L			7410MM
	42494.19				2	A	B	C	D	E	F	G		I	J	K	L			6600MM
	42494.20				2	A	B	C	D	E	F	G		I	J	K	L			7020MM
	42494.21				2	A	B	C	D	E	F	G		I	J	K	L			7620MM
	42494.23				2	A	B	C	D	E	F	G		I	J	K	L			8010MM
	42494.24				2	A	B	C	D	E	F	G		I	J	K	L			8220MM
	42494.25				2	A	B	C	D	E	F	G		I	J	K	L			8400MM
	42494.26				2	A	B	C	D	E	F	G		I	J	K	L			8610MM
	42494.27				2	A	B	C	D	E	F	G		I	J	K	L			8820MM
	42494.28				2	A	B	C	D	E	F	G		I	J	K	L			9000MM

A356
MAST SYSTEM

A356-6
NARROW AISLE HYD. COMPONENTS-FIXED STAGE

NO.	PART NAME					NA2.0				FLEXI									BODY NO.	REMARK
																	ACION			
	NEW PART NO.	OLD PART NO.	ITC	APPLIED DATE	QTY	DC G3	DC G4	AC G4	ACE	DC G3	DC G4	G4	VNA 1200	DC G3	DC G4	AC G4	1200	VNA 1200		
						A	B	C	D	E	F	G	H	I	J	K	L	M		
3	(SIDESHIFT FREE LIFT HOSE)																			
	42395.34				2	A	B	C	D	E	F	G		I	J	K	L			4050MM
	42395.04				2	A	B	C	D	E	F	G		I	J	K	L			4200MM
	42395.06				2	A	B	C	D	E	F	G		I	J	K	L			4620MM
	42395.45				2	A	B	C	D	E	F	G		I	J	K	L			4800MM
	42395.08				2	A	B	C	D	E	F	G		I	J	K	L			5010MM
	42395.10				2	A	B	C	D	E	F	G		I	J	K	L			5400MM
	42395.01				2	A	B	C	D	E	F	G		I	J	K	L			5550MM
	42395.13				2	A	B	C	D	E	F	G		I	J	K	L			6000MM
	42395.14				1	A	B	C	D	E	F	G		I	J	K	L			6210MM
	42395.16				1	A	B	C	D	E	F	G		I	J	K	L			6600MM
	42395.18																			7020MM
	42395.19																			7200MM
	42395.20																			7410MM
	42395.21																			7620MM
	42395.23																			8010MM
	42395.24																			8220MM
	42395.25																			8400MM
	42395.26																			8610MM
	42395.27																			8820MM
	42395.28																			9000MM

A356
MAST SYSTEM

A356-6B
NARROW AISLE HYD. COMPONENTS-THIRD STAGE

NO.	PART NAME																				
	NEW PART NO.	OLD PART NO.	性 ITC	APPLIED DATE	量 QTY	NA2.0				FLEXI									BODY NO.	REMARK
												AC					ACiON			
						DC		AC	ACE	DC		G4	VNA 1200	DC		AC	1200	VNA 1200		
						G3	G4	G4		G3	G4			G3	G4	G4				
						A	B	C	D	E	F	G	H	I	J	K	L	M		
4	(CONNECTOR)																			
	35480				3								H							
5	(NUT)																			
	M1501010				4								H							
6	(MAST FITTING)																			
	35476				1								H							
7	(FREE LIFT CYLINDER HOSE)																			
	42567.01				1								H					M		
8	(FREE LIFT CYLINDER HOSE)																			
	42567.00				1								H					M		
9	(CONNECTOR)																			
	35477				2								H					M		
10	(CONNECTOR)																			
	M0601017				1								H					M		
11	(CONNECTOR)																			
	30379				1								H					M		
12	(STEEL TUBE)																			
	30370				1								H					M		
13	(CONNECTOR)																			
	35478A				1								H					M		
14	(NUT)																			
	M1501009				1								H					M		