REVISION RECORD			
LTR	ECO NO:	APPROVED:	DATE:

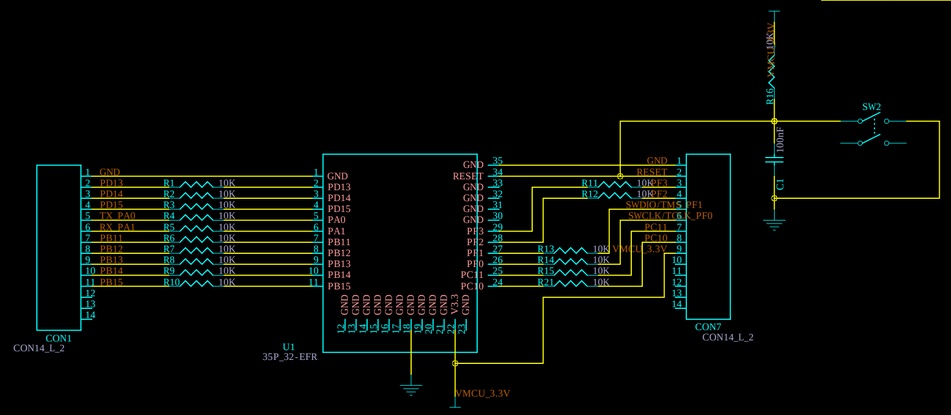

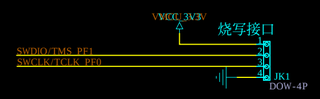

SWD

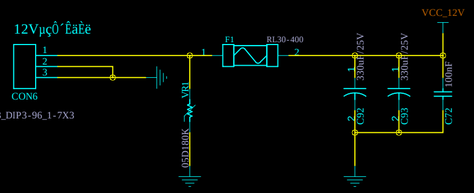

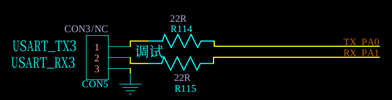

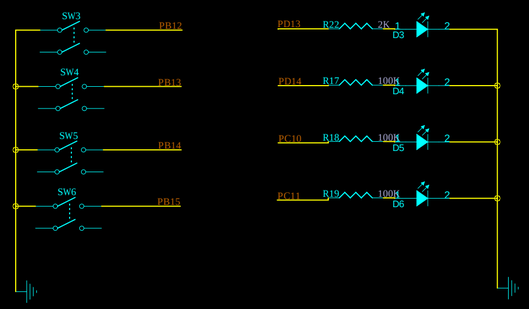

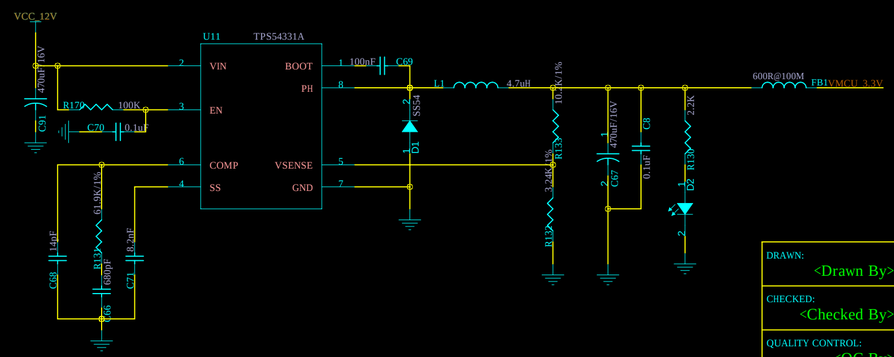

DRAWN: <Drawn By>	DATED: <Drawn Date>
CHECKED: <Checked By>	DATED: <Checked Date>
QUALITY CONTROL: <QC By>	DATED: <QC Date>
RELEASED: <Released By>	DATED: <Release Date>

COMPANY: <Company Name>

TITLE: <Title>

CODE:	SIZE:	DRAWING NO:	REV:
<Code>	A2	<Drawing Number>	<Revision>

SCALE: <Scale> SHEET: 1 OF 1