THIS DOCUMENT AND THE DATA DISCLOSED HEREIN OR HEREWITH IS THE PROPERTY OF ALTIUM LIMITED AND MAY BE FREELY DISTRIBUTED IN WHOLE. NO RIGHTS ARE RESERVED OR EXPRESS OR IMPLIED WARANTEE GIVEN.

| REVISION | DESCRIPTION | DATE | APPROVED |
|---|---|---|---|
| | | | |

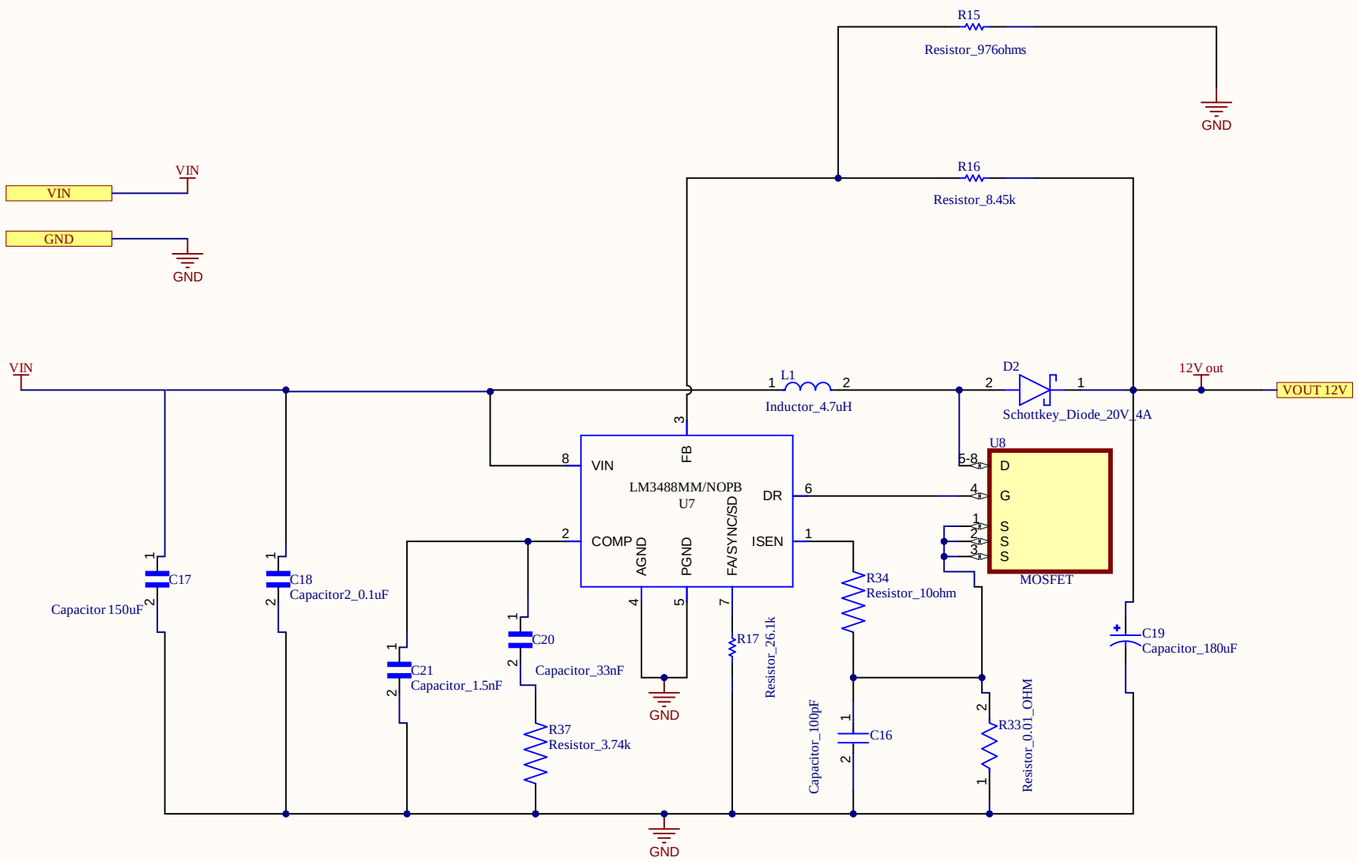


| APPROVALS | DATE |
|---|---|
| ENG: Arvind Balaji Narayan, Gopik Anand | |
| DSN: * | |
| CHK: * | |
| REFERENCE DOCUMENTS | |
| BOM: | |
| ASSY DWG: | |
| FAB DWG: | |
| PCB DWG: | |

PROJECT: Penn Engineering

PROJECT REVISION: | DOCUMENT REVISION: | DESIGN ITEM:

TITLE: Smart Street Light System - Boost Sc

| SIZE | CAGE CODE | DWG NO. | REV |
|---|---|---|---|
| B | | | * |

SCALE: | FILE NAME: Boost_Converter.schdoc | SHEET 2 OF 3

THIS DOCUMENT AND THE DATA DISCLOSED HEREIN OR HEREWITH IS THE PROPERTY OF ALTIUM LIMITED AND MAY BE FREELY DISTRIBUTED IN WHOLE. NO RIGHTS ARE RESERVED OR EXPRESS OR IMPLIED WARANTEE GIVEN.

| REVISION | DESCRIPTION | DATE | APPROVED |
|---|---|---|---|
| | | | |

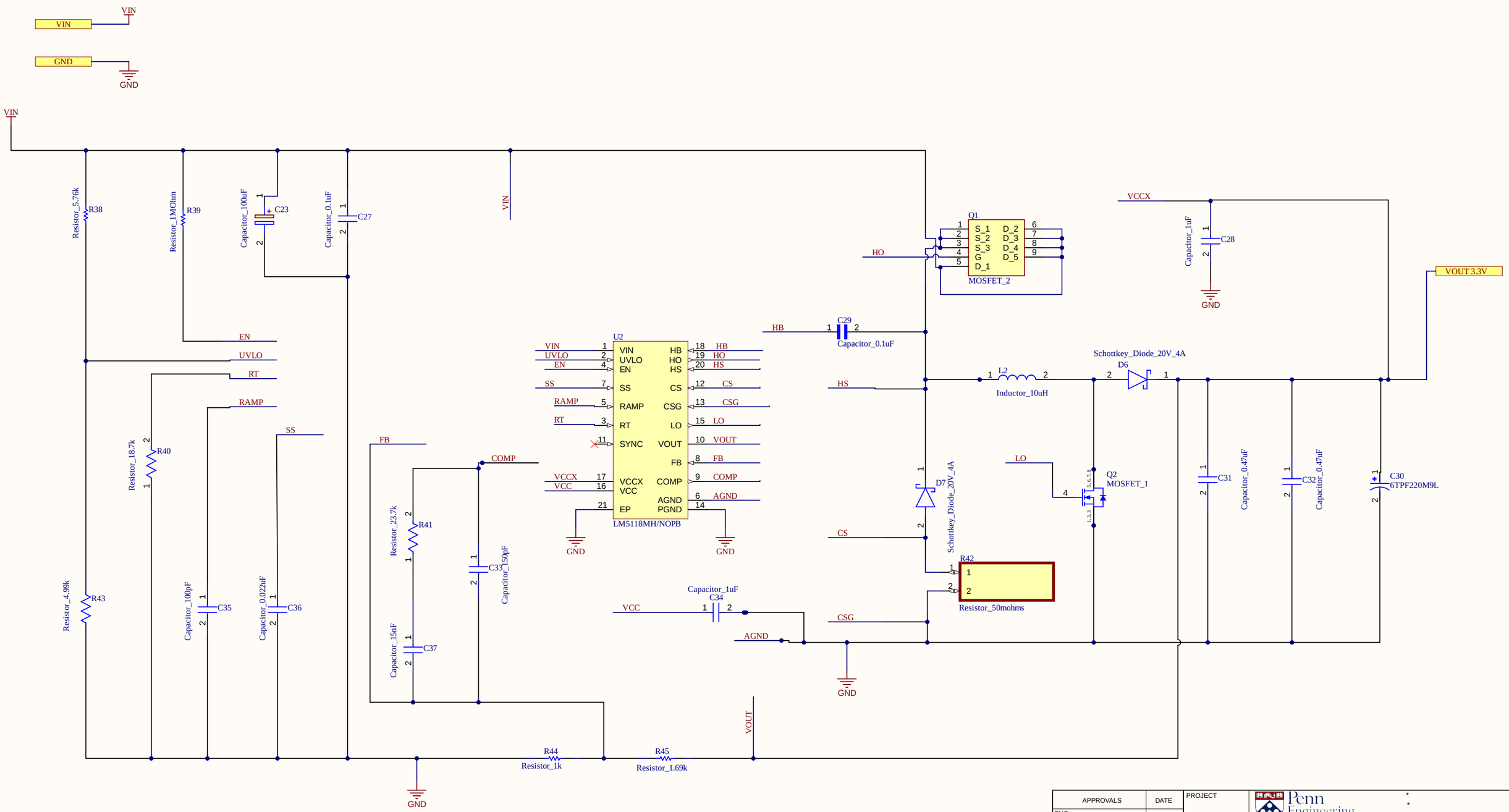


| APPROVALS | DATE |
|---|---|
| ENG: * | |
| DSN: * | |
| CHK: * | |
| REFERENCE DOCUMENTS | |
| BOM: | |
| ASSY DWG: | |
| FAB DWG: | |
| PCB DWG: | |

PROJECT: Penn Engineering

PROJECT REVISION: | DOCUMENT REVISION: | DESIGN ITEM:

TITLE: *

SIZE: B | CAGE CODE | DWG NO. | REV: *

SCALE: | FILE NAME: 3V3Buck_Converter.SchDoc | SHEET * OF *

THIS DOCUMENT AND THE DATA DISCLOSED HEREIN OR HEREWITH IS THE PROPERTY OF ALTIUM LIMITED AND MAY BE FREELY DISTRIBUTED IN WHOLE. NO RIGHTS ARE RESERVED OR EXPRESS OR IMPLIED WARANTEE GIVEN.

| REVISION | DESCRIPTION | DATE | APPROVED |
|---|---|---|---|
| | | | |

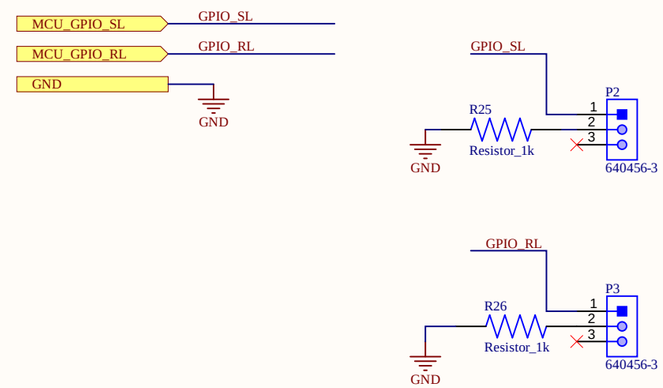


| APPROVALS | DATE |
|---|---|
| ENG: Arvind Balaji Narayan, Gopik Anand | |
| DSN: * | |
| CHK: * | |
| REFERENCE DOCUMENTS | |
| BOM: | |
| ASSY DWG: | |
| FAB DWG: | |
| PCB DWG: | |

PROJECT *

Penn Engineering

PROJECT REVISION: | DOCUMENT REVISION: | DESIGN ITEM:

TITLE

# Smart Street Light System - Actuators

| SIZE | CAGE CODE | DWG NO. | REV |
|---|---|---|---|
| B | | | * |

SCALE: | FILE NAME Actuators.SchDoc | SHEET * OF *

THIS DOCUMENT AND THE DATA DISCLOSED HEREIN OR HEREWITH IS THE PROPERTY OF ALTIUM LIMITED AND MAY BE FREELY DISTRIBUTED IN WHOLE. NO RIGHTS ARE RESERVED OR EXPRESS OR IMPLIED WARANTEE GIVEN.

| REVISION | DESCRIPTION | DATE | APPROVED |
|---|---|---|---|
| | | | |

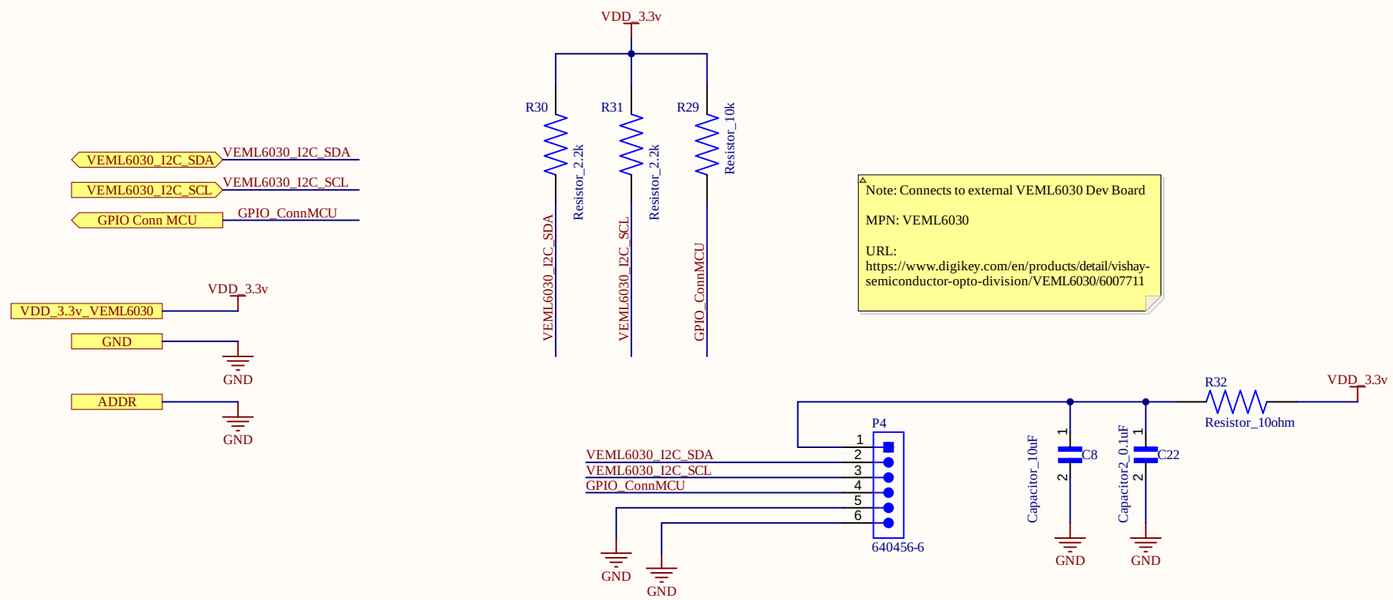


| APPROVALS | DATE |
|---|---|
| ENG: Arvind Balaji Narayan, Gopik Anand | |
| DSN: * | |
| CHK: * | |
| REFERENCE DOCUMENTS | |
| BOM: | |
| ASSY DWG: | |
| FAB DWG: | |
| PCB DWG: | |

PROJECT: Penn Engineering

PROJECT REVISION: | DOCUMENT REVISION: | DESIGN ITEM:

TITLE: Smart Street Light System - Light Se

| SIZE | CAGE CODE | DWG NO. | REV |
|---|---|---|---|
| B | | | * |

SCALE: | FILE NAME: Ambient_Light.SchDoc | SHEET * OF *

THIS DOCUMENT AND THE DATA DISCLOSED HEREIN OR HEREWITH IS THE PROPERTY OF ALTIUM LIMITED AND MAY BE FREELY DISTRIBUTED IN WHOLE. NO RIGHTS ARE RESERVED OR EXPRESS OR IMPLIED WARANTEE GIVEN.

| REVISION | DESCRIPTION | DATE | APPROVED |
|---|---|---|---|
| | | | |

# FTDI CHIP

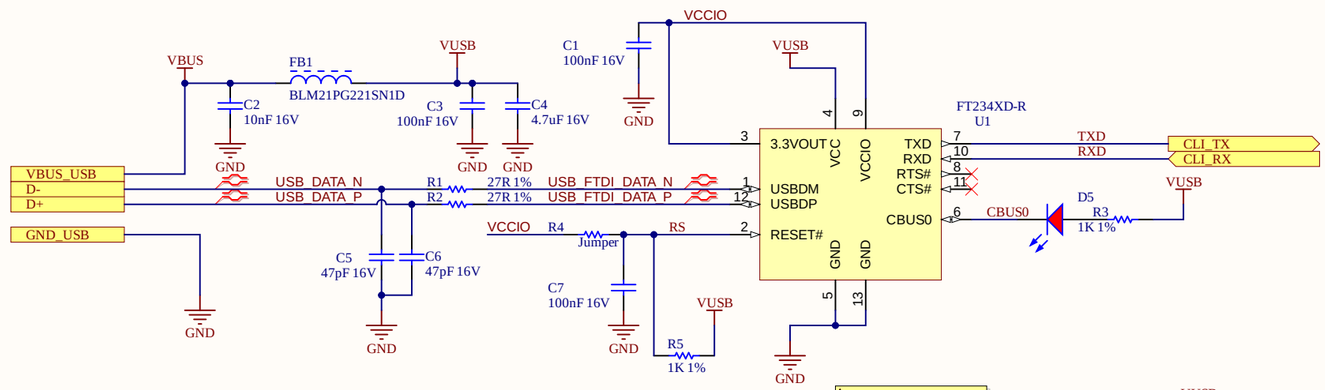


Schematics follows Fig. 6.1 of Datasheet

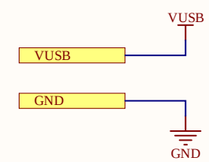


# USB ESD PROTECTION

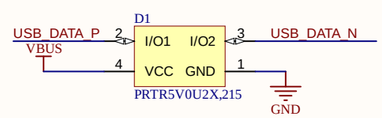


| APPROVALS | DATE |
|---|---|
| ENG: Arvind Balaji Narayan, Gopik Anand | |
| DSN: * | |
| CHK: * | |

REFERENCE DOCUMENTS

BOM:

ASSY DWG:

FAB DWG:

PCB DWG:

PROJECT: *

PROJECT REVISION: | DOCUMENT REVISION: | DESIGN ITEM:

TITLE

Smart Street Light System - FTDI Sch

| SIZE | CAGE CODE | DWG NO. | REV |
|---|---|---|---|
| B | | | * |

SCALE: | FILE NAME FTDI.SchDoc | SHEET * OF *

THIS DOCUMENT AND THE DATA DISCLOSED HEREIN OR HEREWITH IS THE PROPERTY OF ALTIUM LIMITED AND MAY BE FREELY DISTRIBUTED IN WHOLE. NO RIGHTS ARE RESERVED OR EXPRESS OR IMPLIED WARANTEE GIVEN.

| REVISION | DESCRIPTION | DATE | APPROVED |
|---|---|---|---|
| | | | |

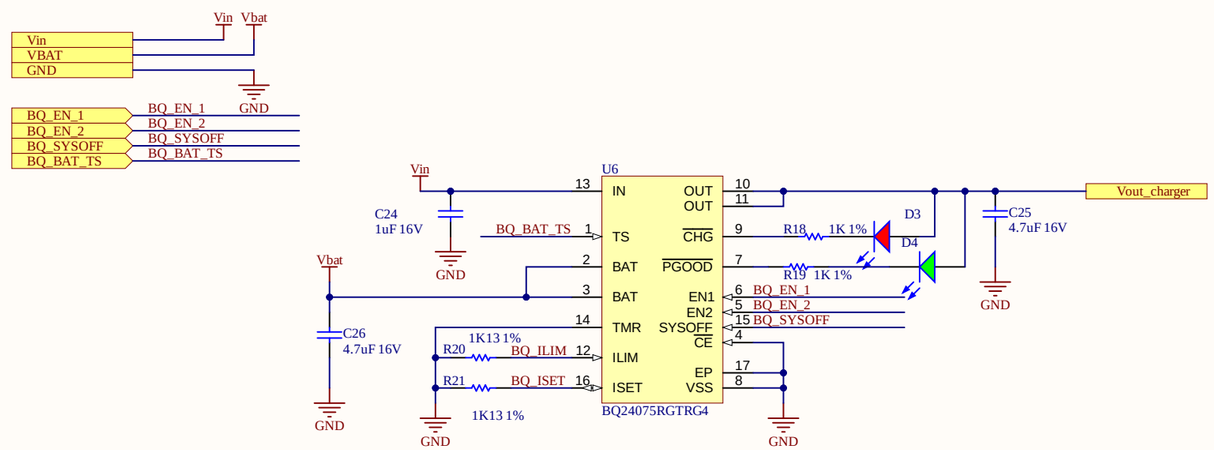


ilim = Kilim/Rilim => 1610/1130 = 1.42A
(if EN2=1, EN1=0)

ISET = KISET/RSET => 890/1130 = 0.788A

| APPROVALS | | DATE |
|---|---|---|
| ENG: | Arvind Balaji Narayan, Gopik Anand | |
| DSN: | * | |
| CHK: | * | |

REFERENCE DOCUMENTS

BOM:

ASSY DWG:

FAB DWG:

PCB DWG:

PROJECT

Penn Engineering

PROJECT REVISION: | DOCUMENT REVISION: | DESIGN ITEM:

TITLE

# Smart Street Light System - LiPo Sch

| SIZE | CAGE CODE | DWG NO. | REV |
|---|---|---|---|
| B | | | * |

SCALE: | FILE NAME LiPo_Charger.SchDoc | SHEET * OF *

THIS DOCUMENT AND THE DATA DISCLOSED HEREIN OR HEREWITH IS THE PROPERTY OF ALTIUM LIMITED AND MAY BE FREELY DISTRIBUTED IN WHOLE. NO RIGHTS ARE RESERVED OR EXPRESS OR IMPLIED WARANTEE GIVEN.

| REVISION | DESCRIPTION | DATE | APPROVED |
|---|---|---|---|
| | | | |

# POWER SUPPLY - CHANGE ME TO YOUR POWER ARCHITECTURE

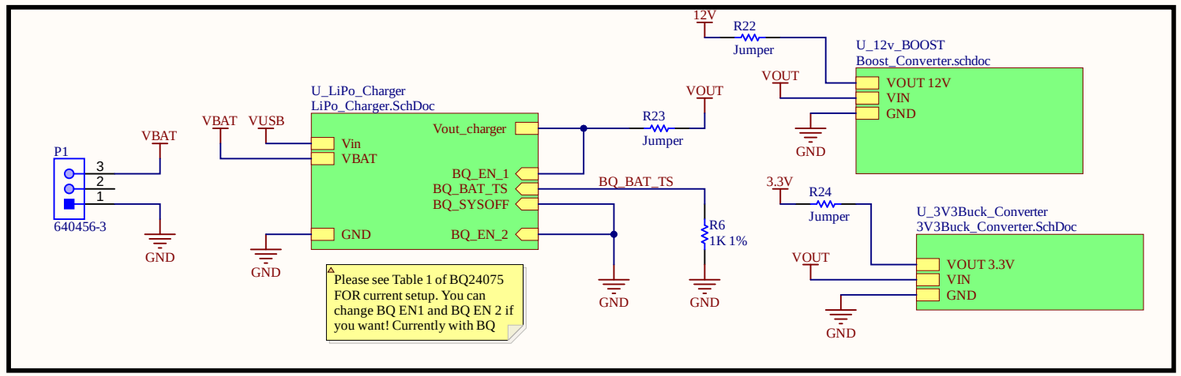


## NOTES

Section to add version notes or any other general information

# SENSORS

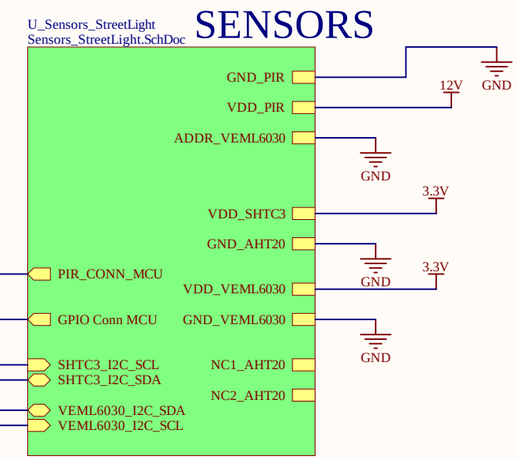


Sensor 1 (On PCB): Temperature and Humidity Sensor (AHT20) - I2C Connection Component Link: https://www.digikey.com/en/products/detail/adafruit-industries-llc/5183/15204087 Sensor2 (On PCB): Ambient Light Sensor (VEML6030) - I2C Connection Component Link: https://www.digikey.com/en/products/detail/vishay-semiconductor-opto-division/VEML6030/6007711 Sensor 3 (Out of Board): PIR Motion Sensor GPIO Connection Component Link: https://www.digikey.com/en/products/detail/sparkfun-electronics/SEN-13285/5673793?s=N4IgTCBcDaIM4FMB2BGAzGAHAVhAXQF8g(SEN13285)

# TEST POINTS AND FIDUCIALS

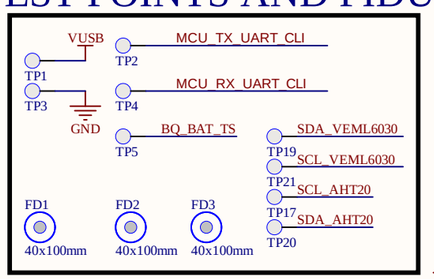


3V3 LDO. IF USING for SD CARD, consider connecting the EN pin to the MCU so you can turn off the SD Card when in sleep.

NOTE:

This power architecture is just an example. Please change the architecture to match the power architecture you designed for your project. Note that 6V is connected to nothing!

# MCU

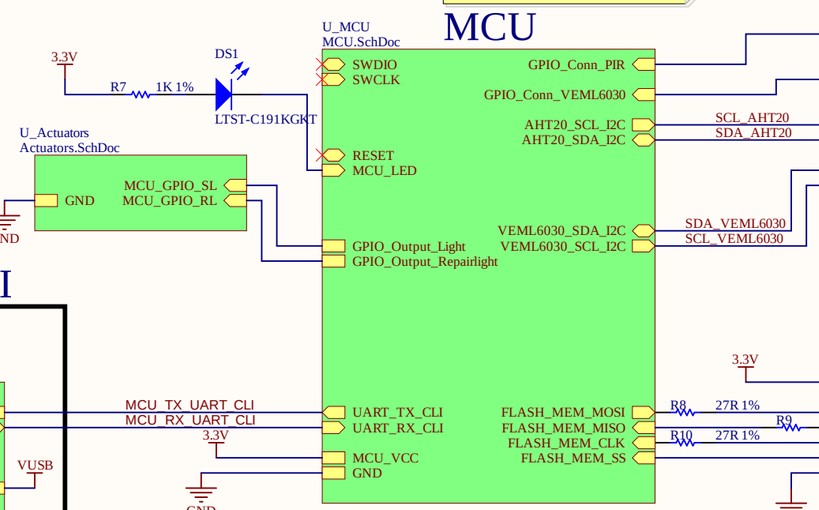


# USB CONNECTOR + FTDI

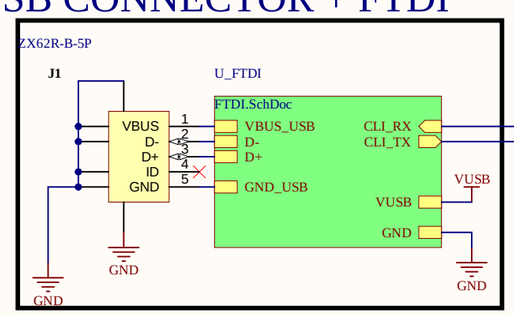


NOTE:

The FTDI Chip is an useful chip that allows us to convert USART cmessages into USB signals. It allows us to connect the MCU directly to the USB port of a computer and use the serial terminal (it is the same bridge used on the SAMW25 Xplained Board).The FTDI device also contains protection circuitry for

Note: Only the required pins are exposed for the MCU. Remember to add the ports for the

# SD CARD MEMORY

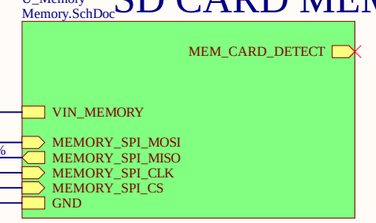


Note:
This is the SD Card, which we will use for our project. PLEASE DO NOT ERASE! Connect a 3V3 rail to this SD Card.

The SD CARD needs 100 mA (worst case, most common is 30mA). If your existing power supply cannot handle this added

| APPROVALS | DATE |
|---|---|
| ENG: Arvind Balaji Narayan, Gopik Anand | |
| DSN: * | |
| CHK: * | |
| REFERENCE DOCUMENTS | |
| BOM: | |
| ASSY DWG: | |
| FAB DWG: | |
| PCB DWG: | |

PROJECT

Penn Engineering

PROJECT REVISION: | DOCUMENT REVISION: | DESIGN ITEM:

TITLE

Smart Street Light System - Main Sch

| SIZE | CAGE CODE | DWG NO. | REV |
|---|---|---|---|
| B | | | * |

SCALE: | FILE NAME MAIN.SchDoc | SHEET * OF *

THIS DOCUMENT AND THE DATA DISCLOSED HEREIN OR HEREWITH IS THE PROPERTY OF ALTIUM LIMITED AND MAY BE FREELY DISTRIBUTED IN WHOLE. NO RIGHTS ARE RESERVED OR EXPRESS OR IMPLIED WARANTEE GIVEN.

| REVISION | DESCRIPTION | DATE | APPROVED |
|---|---|---|---|
| | | | |

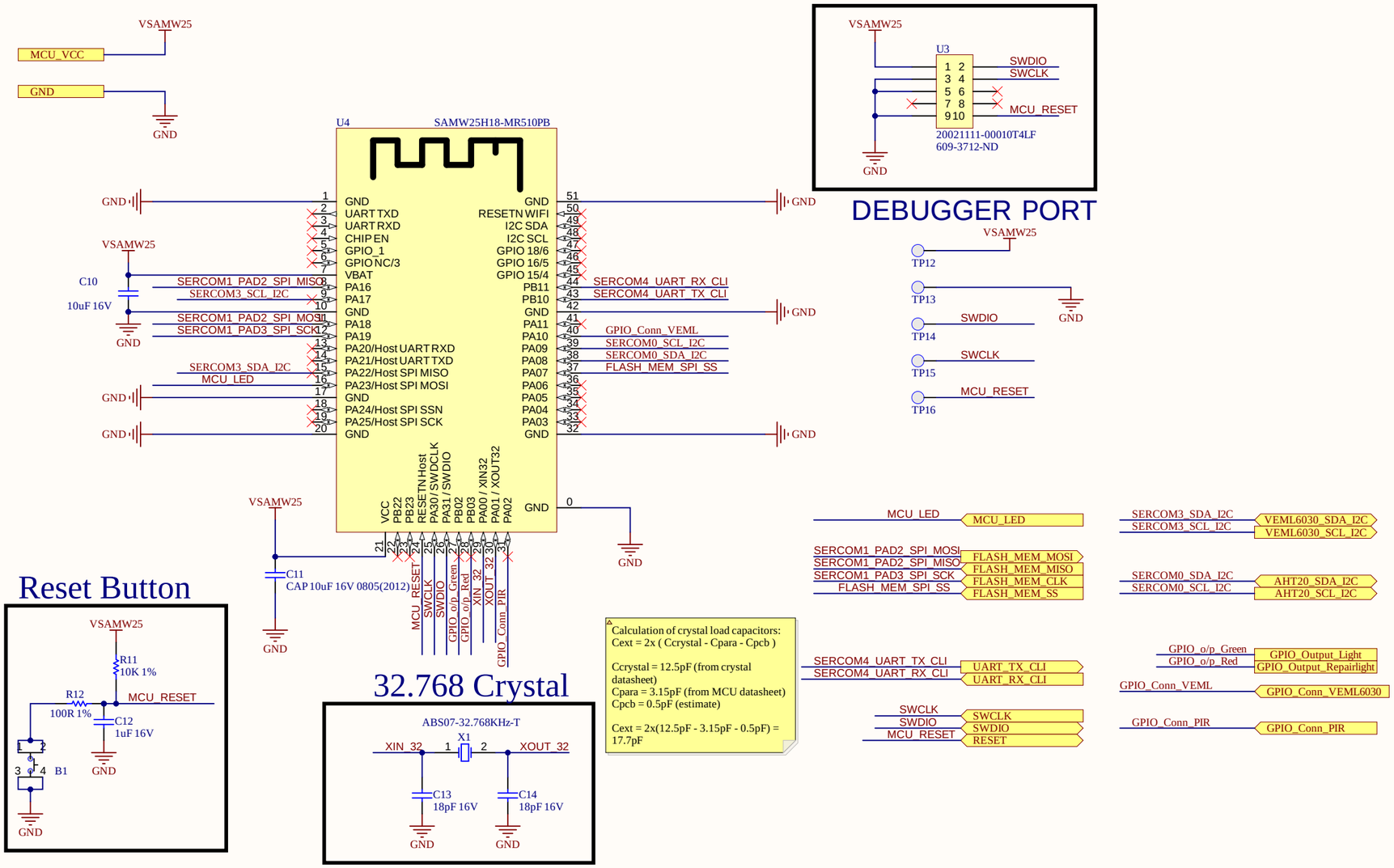


| APPROVALS | DATE |
|---|---|
| ENG: Arvind Balaji Narayan, Gopik Anand | |
| DSN: * | |
| CHK: * | |

REFERENCE DOCUMENTS
BOM:
ASSY DWG:
FAB DWG:
PCB DWG:

PROJECT
Penn Engineering

PROJECT REVISION: | DOCUMENT REVISION: | DESIGN ITEM:

TITLE
Smart Street Light System - MCU Sc

| SIZE | CAGE CODE | DWG NO. | REV |
|---|---|---|---|
| B | | | * |

SCALE: | FILE NAME MCU.SchDoc | SHEET * OF *

THIS DOCUMENT AND THE DATA DISCLOSED HEREIN OR HEREWITH IS THE PROPERTY OF ALTIUM LIMITED AND MAY BE FREELY DISTRIBUTED IN WHOLE. NO RIGHTS ARE RESERVED OR EXPRESS OR IMPLIED WARANTEE GIVEN.

| REVISION | DESCRIPTION | DATE | APPROVED |
|---|---|---|---|
| | | | |

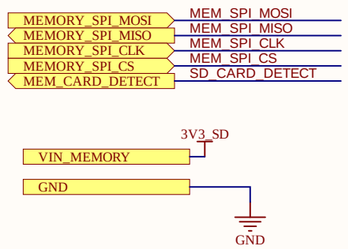


## SD CARD

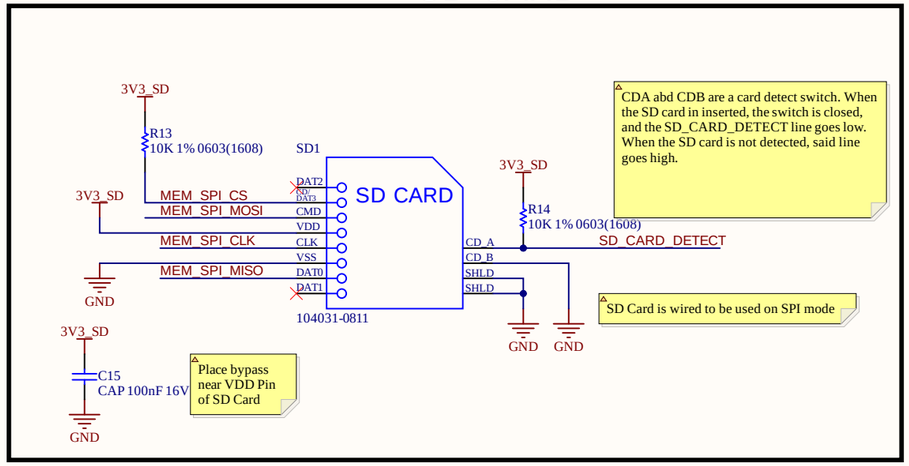


## TESTPOINTS

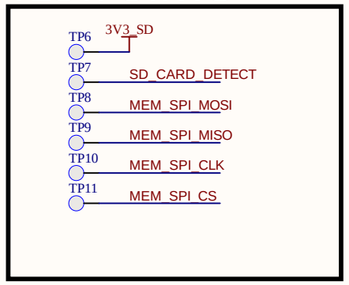


| APPROVALS | DATE |
|---|---|
| ENG: Arvind Balaji Narayan, Gopik Anand | |
| DSN: * | |
| CHK: * | |
| REFERENCE DOCUMENTS | |
| BOM: | |
| ASSY DWG: | |
| FAB DWG: | |
| PCB DWG: | |

PROJECT: Penn Engineering

PROJECT REVISION: | DOCUMENT REVISION: | DESIGN ITEM:

TITLE: Smart Street Light System - Memory

| SIZE | CAGE CODE | DWG NO. | REV |
|---|---|---|---|
| B | | | * |

SCALE: | FILE NAME: Memory.SchDoc | SHEET * OF *

THIS DOCUMENT AND THE DATA DISCLOSED HEREIN OR HEREWITH IS THE PROPERTY OF ALTIUM LIMITED AND MAY BE FREELY DISTRIBUTED IN WHOLE. NO RIGHTS ARE RESERVED OR EXPRESS OR IMPLIED WARANTEE GIVEN.

| REVISION | DESCRIPTION | DATE | APPROVED |
|---|---|---|---|
| | | | |

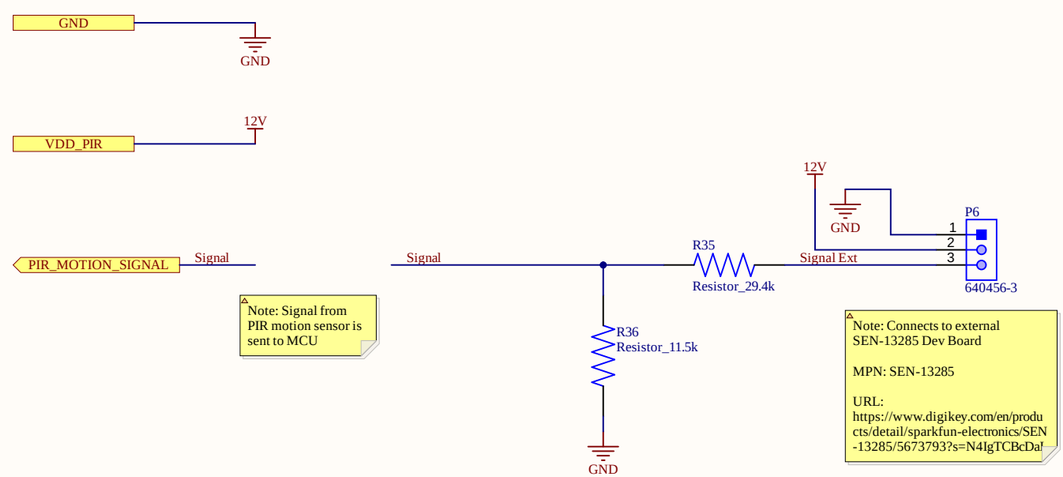


| APPROVALS | DATE |
|---|---|
| ENG: Arvind Balaji Narayan, Gopik Anand | |
| DSN: * | |
| CHK: * | |
| REFERENCE DOCUMENTS | |
| BOM: | |
| ASSY DWG: | |
| FAB DWG: | |
| PCB DWG: | |

PROJECT: Penn Engineering

PROJECT REVISION: * | DOCUMENT REVISION: * | DESIGN ITEM: *

TITLE: Smart Street Light System - PIR Sch

| SIZE | CAGE CODE | DWG NO. | REV |
|---|---|---|---|
| B | | | * |

SCALE: | FILE NAME: PIR_Motion_Sensor.SchDoc | SHEET * OF *

THIS DOCUMENT AND THE DATA DISCLOSED HEREIN OR HEREWITH IS THE PROPERTY OF ALTIUM LIMITED AND MAY BE FREELY DISTRIBUTED IN WHOLE. NO RIGHTS ARE RESERVED OR EXPRESS OR IMPLIED WARANTEE GIVEN.

| REVISION | DESCRIPTION | DATE | APPROVED |
|---|---|---|---|
| | | | |

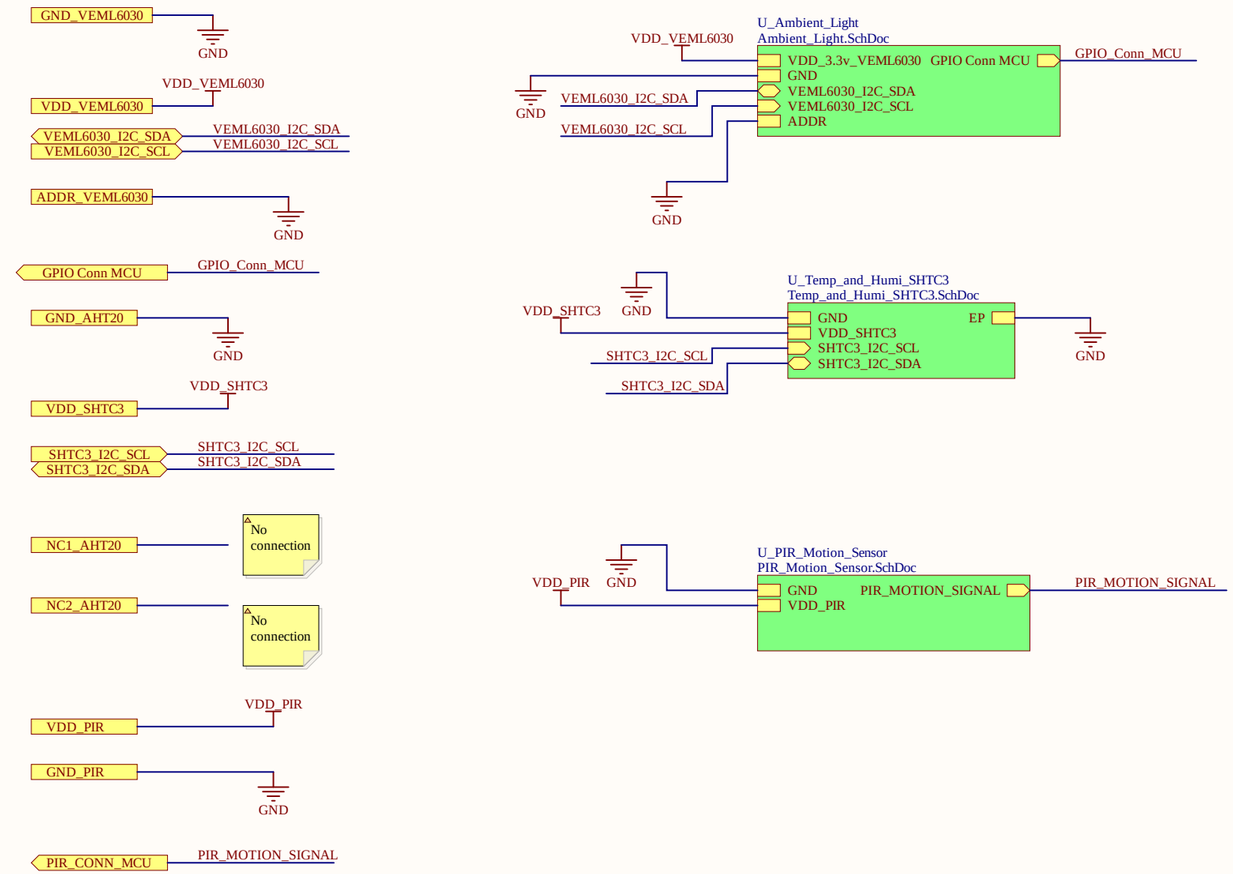


| APPROVALS | DATE |
|---|---|
| ENG: Arvind Balaji Narayan, Gopik Anand | |
| DSN: * | |
| CHK: * | |

REFERENCE DOCUMENTS

BOM:

ASSY DWG:

FAB DWG:

PCB DWG:

PROJECT: * * * *

Penn Engineering

PROJECT REVISION: | DOCUMENT REVISION: | DESIGN ITEM:

TITLE: Smart Street Light System - Street Li

| SIZE | CAGE CODE | DWG NO. | REV |
|---|---|---|---|
| B | | | * |

SCALE: | FILE NAME: Sensors_StreetLight.SchDoc | SHEET * OF *

THIS DOCUMENT AND THE DATA DISCLOSED HEREIN OR HEREWITH IS THE PROPERTY OF ALTIUM LIMITED AND MAY BE FREELY DISTRIBUTED IN WHOLE. NO RIGHTS ARE RESERVED OR EXPRESS OR IMPLIED WARANTEE GIVEN.

| REVISION | DESCRIPTION | DATE | APPROVED |
|---|---|---|---|
| | | | |

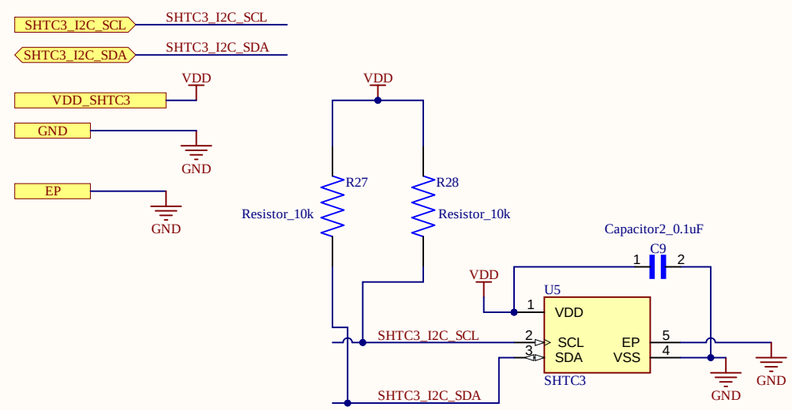


| APPROVALS | DATE |
|---|---|
| ENG: Arvind Balaji Narayan, Gopik Anand | |
| DSN: * | |
| CHK: * | |
| REFERENCE DOCUMENTS | |
| BOM: | |
| ASSY DWG: | |
| FAB DWG: | |
| PCB DWG: | |

PROJECT: Penn Engineering *

PROJECT REVISION: | DOCUMENT REVISION: | DESIGN ITEM:

TITLE: Smart Street Light System - Temp Se

| SIZE | CAGE CODE | DWG NO. | REV |
|---|---|---|---|
| B | | | * |

SCALE: | FILE NAME: Temp_and_Humi_SHTC3.SchDoc | SHEET * OF *

THIS DOCUMENT AND THE DATA DISCLOSED HEREIN OR HEREWITH IS THE PROPERTY OF ALTIUM LIMITED AND MAY BE FREELY DISTRIBUTED IN WHOLE. NO RIGHTS ARE RESERVED OR EXPRESS OR IMPLIED WARANTEE GIVEN.

=DOC_NO_SCH_DWG DWG NO REV SHT

| REVISION | DESCRIPTION | DATE | APPROVED |
|---|---|---|---|
| | | | |

## Manufacturing Notes:

Four (4) Layers
Dimensions: 60mm x 60mm
Thickness: 0.062"
Material: FR4
All layers are unmirrored - should be able to "see straight through"
Scoring: none

Finished Thickness : 0.062 inches
Surface Finish : ENEPIG
Gold Fingers : No
Outer Layer Finish Copper : 1 Oz
Inner Copper : 0.5 oz Inners
Number of Holes Per Board:
Minimum Hole Size : 0.008 Inches or more
Minimum Trace (Outer layer) : 0.006 Inches
Minimum Space (Outer layer) : 0.006 Inches
Minimum Trace (Inner layer) : 0.006 Inches
Minimum Space (Inner layer) : 0.006 Inches
Solder Mask : Yes, Solder Mask Sides : Top and Bottom
Solder Mask Color : Green
Solder Mask Type : LPI
Solder Mask Finish : Standard (Semi-Gloss)
Silk Screen : Yes
Silk Screen Sides : Both
Silk Screen Color : White
Internal Slots : None
Counter Sink : No
Counter Bore : No
Edge Plating : No
Route and Retain : Yes
Scoring : Yes
Controlled Impedance : None
Controlled Dielectric : No
Thru-Hole Via in Pad : No
Thickness Tolerance : Plus or Minus 10%
Logo Allowed : In copper or silk screen
UL Marking Required : Yes
Rohs Marking : Yes
ITAR? : No

Layer Stack Legend

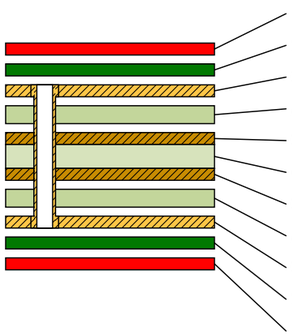

| Material | Layer | Thickness | Dielectric Material | Type | Gerber |
|---|---|---|---|---|---|
| | Top Overlay | | | Legend | GTO |
| Surface Material | Top Solder | 0.03mm | Solder Resist | Solder Mask | GTS |
| **Copper** | **Top Layer** | **0.04mm** | | **Signal** | **GTL** |
| *Prepreg* | | *0.33mm* | *PP-006* | *Dielectric* | |
| **CF-004** | **GroundPlane** | **0.02mm** | | **Internal Plane** | **GP1** |
| *Core* | | *0.71mm* | *Core-009* | *Dielectric* | |
| **CF-004** | **PowerPlane** | **0.02mm** | | **Internal Plane** | **GP2** |
| *Prepreg* | | *0.33mm* | *PP-006* | *Dielectric* | |
| **Copper** | **Bottom Layer** | **0.04mm** | | **Signal** | **GBL** |
| Surface Material | Bottom Solder | 0.03mm | Solder Resist | Solder Mask | GBS |
| | Bottom Overlay | | | Legend | GBO |

Total thickness: 1.53mm

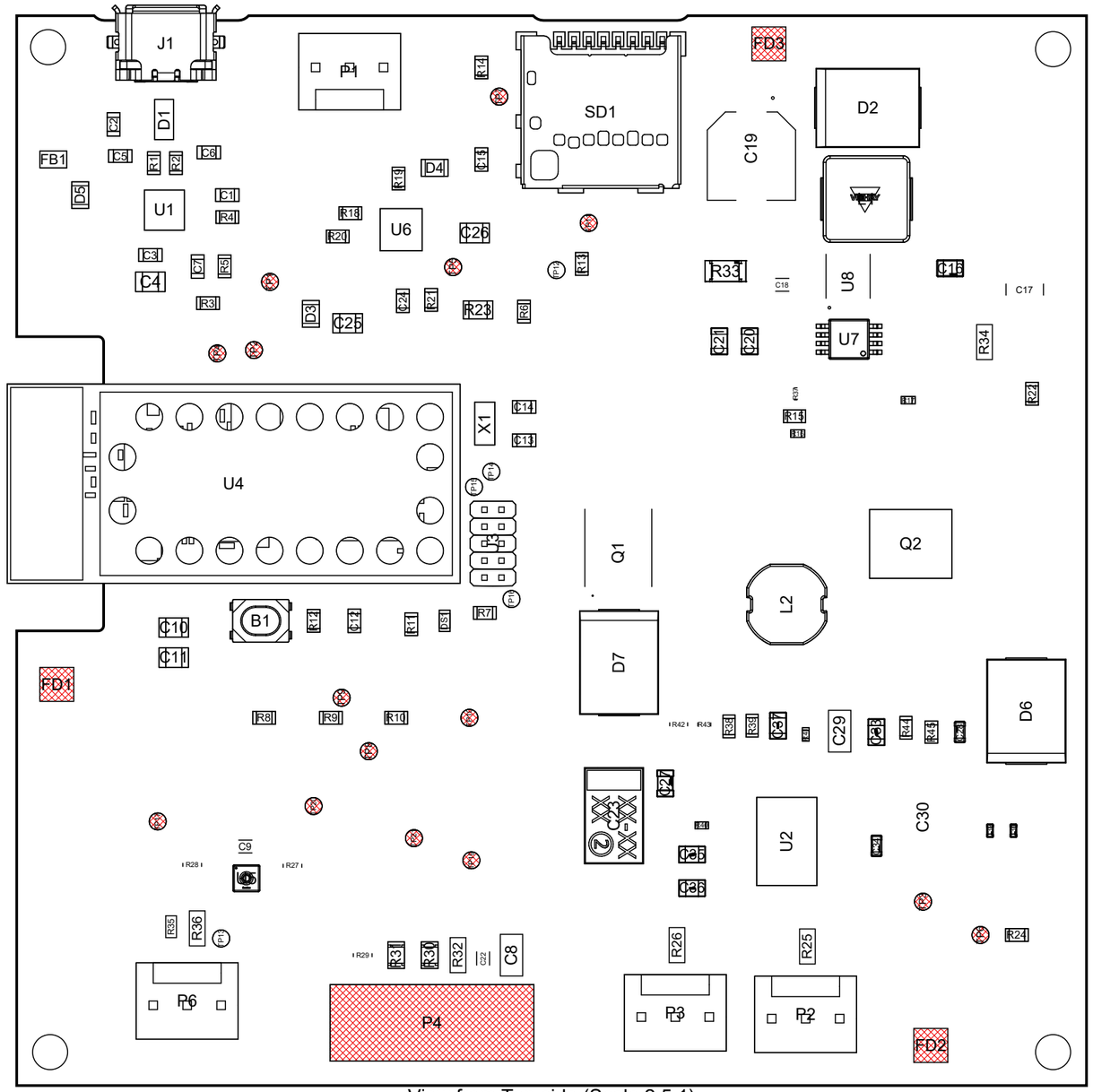


View from Top side (Scale 2.5:1)

| APPROVALS | DATE |
|---|---|
| ENG: Eduardo Garcia | --/--/-- |
| DSN: Arvind Balaji Narayan Gopik | --/--/-- |
| CHK: Eduardo Garcia | --/--/-- |

REFERENCE DOCUMENTS
BOM: =DOC_NO_BOM
ASSY DWG: =DOC_NO_ASSY_DWG
FAB DWG: =DOC_NO_FAB_DWG
PCB DWG: =PCB_DWG_NO

PROJECT: Smart Street Lighting System
PROJECT REVISION: =Copy(proiver,1,20)
DOCUMENT REVISION: =Copy(vercontrol,1,20)
DESIGN ITEM:

U of Pennsylvania
Philadelphia
PA
19104

TITLE
# Smart Street Lighting System

SIZE: B | CAGE CODE: =CAGE_CODE | DWG NO.: =DOC_NO_SCH_DWG | REV
SCALE: | FILE NAME: StarterBoardFabrication.PCBDwf | SHEET 1 OF 12

=DOC_NO_SCH_DWG

THIS DOCUMENT AND THE DATA DISCLOSED HEREIN OR HEREWITH IS THE PROPERTY OF ALTIUM LIMITED AND MAY BE FREELY DISTRIBUTED IN WHOLE. NO RIGHTS ARE RESERVED OR EXPRESS OR IMPLIED WARANTEE GIVEN.

=DOC_NO_SCH_DWG DWG NO REV SHT

| REVISION | DESCRIPTION | DATE | APPROVED |
|---|---|---|---|
| | | | |

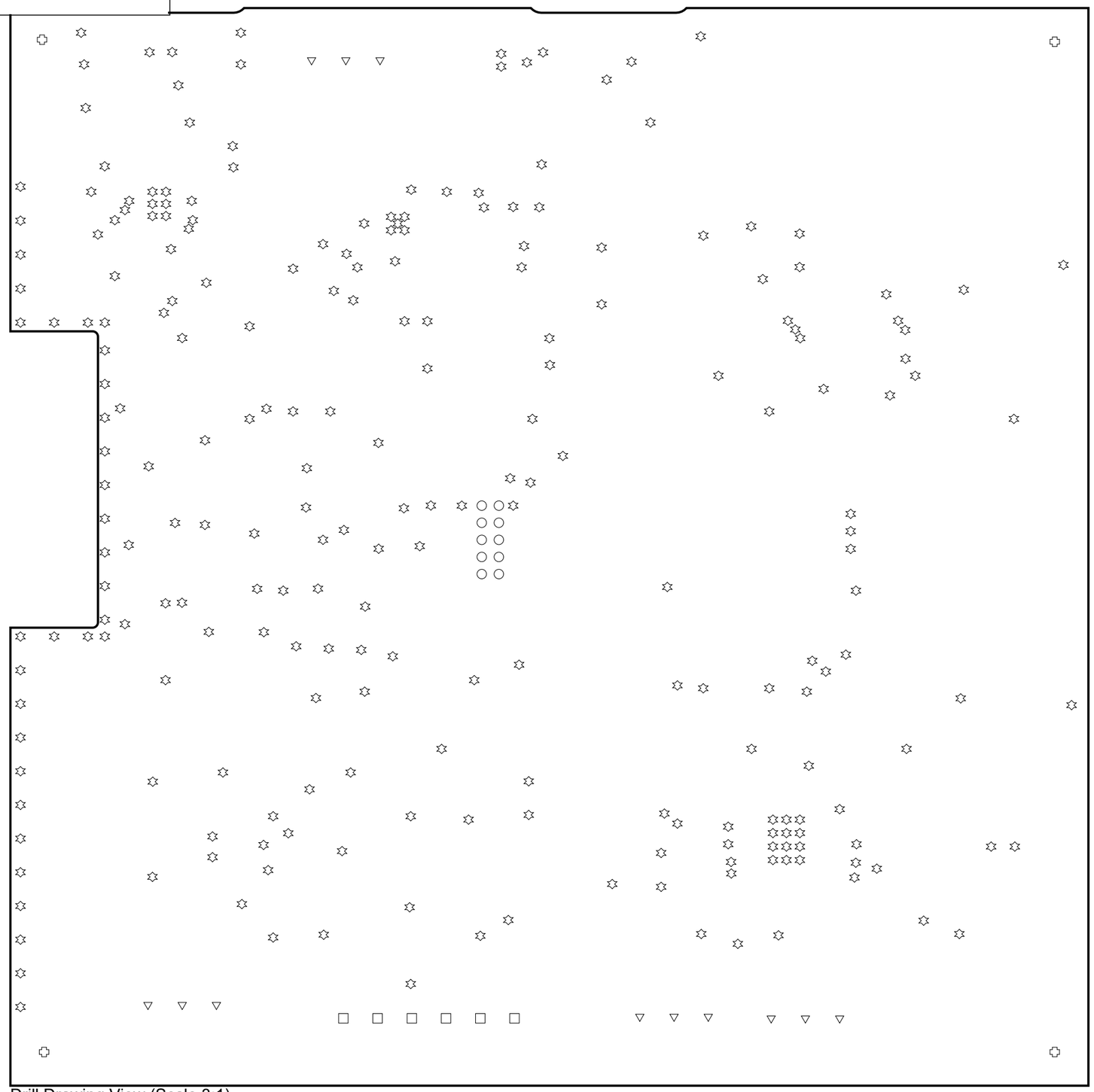

Drill Drawing View (Scale 3:1)

Drill Table

| Symbol | Count | Hole Size | Plated | Hole Tolerance |
|---|---|---|---|---|
| ✡ | 240 | 0.20mm | Plated | |
| ○ | 10 | 0.65mm | Plated | |
| ▽ | 12 | 1.27mm | Plated | |
| □ | 6 | 1.30mm | Plated | |
| ✪ | 4 | 2.70mm | Plated | |
| | 272 Total | | | |

| APPROVALS | | DATE |
|---|---|---|
| ENG: | Eduardo Garcia | --/--/-- |
| DSN: | Arvind Balaji Narayan / Gopik Krishna | |
| CHK: | Eduardo Garcia | --/--/-- |

REFERENCE DOCUMENTS

BOM: =DOC_NO_BOM

ASSY DWG: =DOC_NO_ASSY_DWG

FAB DWG: =DOC_NO_FAB_DWG

PCB DWG: =PCB_DWG_NO

PROJECT: Smart Street Lighting System

Penn Engineering, University of Pennsylvania — U of Pennsylvania, Philadelphia, PA 19104

PROJECT REVISION: =Copy(prover,1,20)

DOCUMENT REVISION: =Copy(vercontrol,1,20)

DESIGN ITEM:

TITLE: Smart Street Lighting System

SIZE: B | CAGE CODE: =CAGE_CODE | DWG NO.: =DOC_NO_SCH_DWG | REV

SCALE: * | FILE NAME: StarterBoardFabrication.PCBDwf | SHEET: 2 OF 12

=DOC_NO_SCH_DWG

THIS DOCUMENT AND THE DATA DISCLOSED HEREIN OR HEREWITH IS THE PROPERTY OF ALTIUM LIMITED AND MAY BE FREELY DISTRIBUTED IN WHOLE. NO RIGHTS ARE RESERVED OR EXPRESS OR IMPLIED WARANTEE GIVEN.

| REVISION | DESCRIPTION | DATE | APPROVED |
|---|---|---|---|
| | | | |

Top Overlay (Scale 3:1)

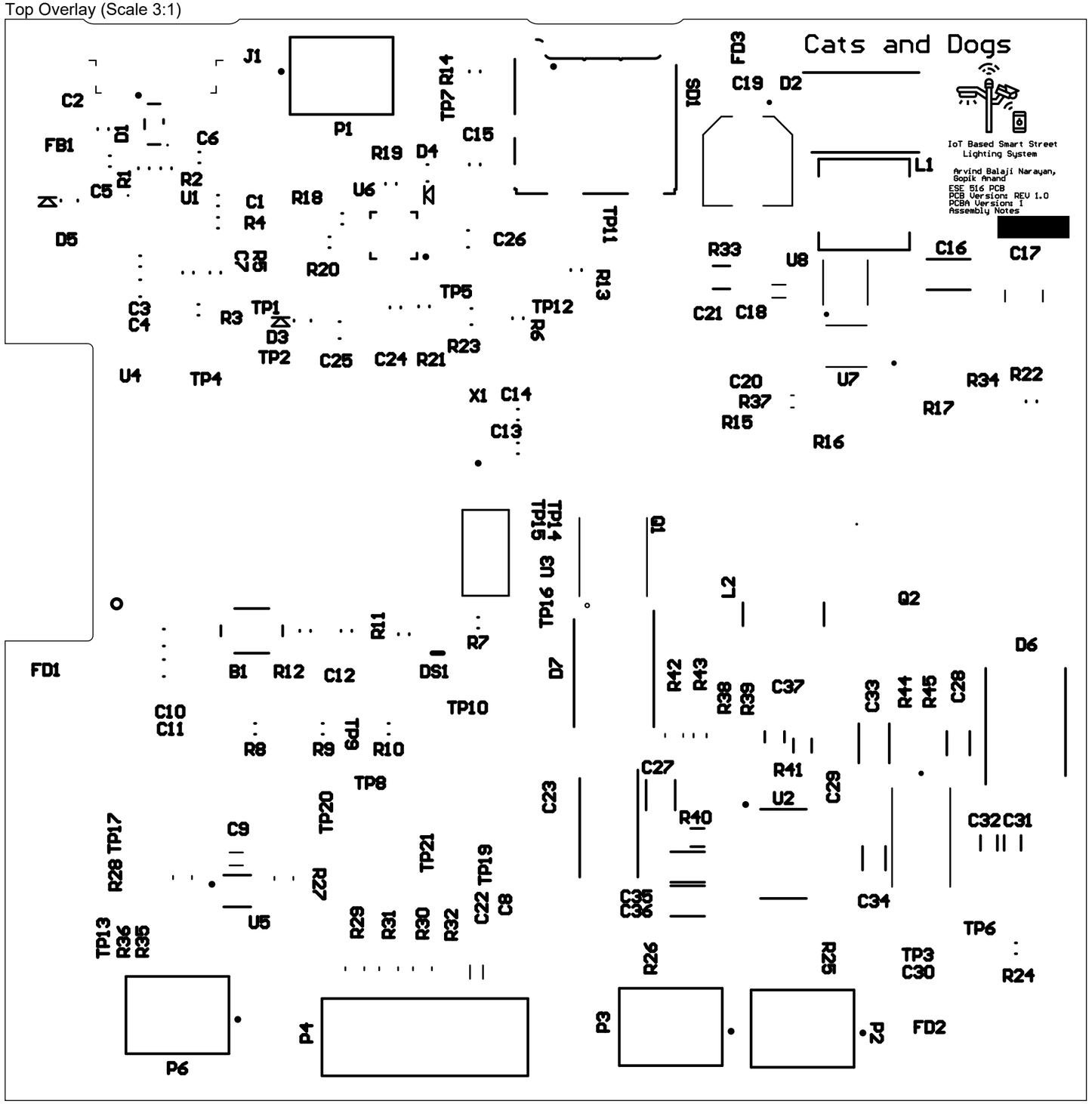


| APPROVALS | | DATE |
|---|---|---|
| ENG: | Eduardo Garcia | --/--/-- |
| DSN: | Arvind Balaji Narayan, Gopik Anand | --/--/-- |
| CHK: | Eduardo Garcia | --/--/-- |

REFERENCE DOCUMENTS

BOM: =DOC_NO_BOM

ASSY DWG: =DOC_NO_ASSY_DWG

FAB DWG: =DOC_NO_FAB_DWG

PCB DWG: =PCB_DWG_NO

PROJECT: Smart Street Lighting System

U of Pennsylvania
Philadelphia
PA
19104

PROJECT REVISION: =Copy(proiver,1,20)

DOCUMENT REVISION: =Copy(vercontrol,1,20)

DESIGN ITEM:

TITLE

# Smart Street Lighting System

| SIZE | CAGE CODE | DWG NO. | REV |
|---|---|---|---|
| B | =CAGE_CODE | =DOC_NO_SCH_DWG | |

SCALE: * FILE NAME: StarterBoardFabrication.PCBDwf SHEET 3 OF 12

=DOC_NO_SCH_DWG

THIS DOCUMENT AND THE DATA DISCLOSED HEREIN OR HEREWITH IS THE PROPERTY OF ALTIUM LIMITED AND MAY BE FREELY DISTRIBUTED IN WHOLE. NO RIGHTS ARE RESERVED OR EXPRESS OR IMPLIED WARANTEE GIVEN.

| REVISION | DESCRIPTION | DATE | APPROVED |
|---|---|---|---|
| | | | |

Top Solder (Scale 3:1)

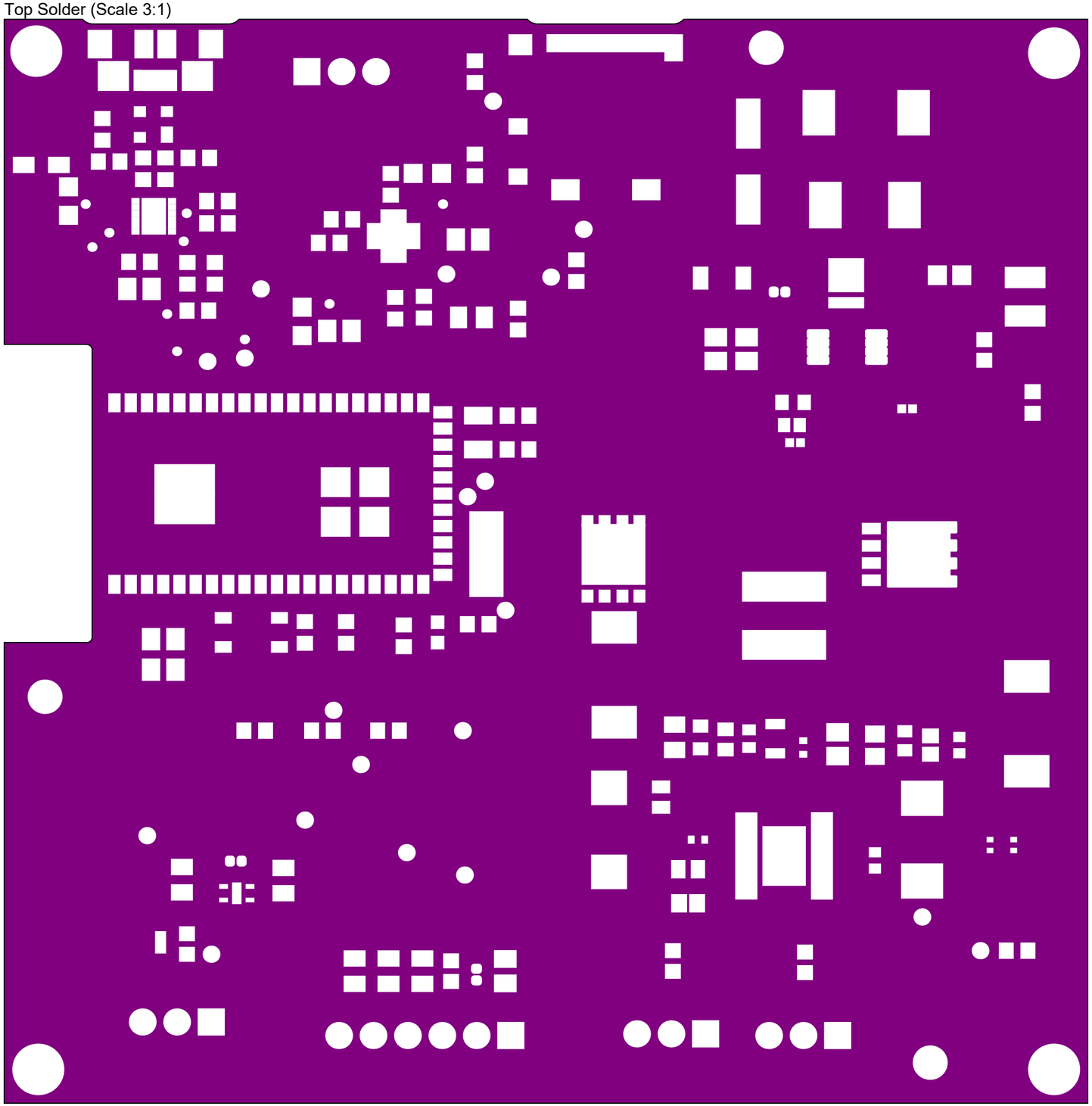

| APPROVALS | | DATE |
|---|---|---|
| ENG: | Eduardo Garcia | --/--/-- |
| DSN: | Arvind Balaji Narayan/ Gopik A | --/--/-- |
| CHK: | Eduardo Garcia | --/--/-- |

REFERENCE DOCUMENTS

BOM: =DOC_NO_BOM

ASSY DWG: =DOC_NO_ASSY_DWG

FAB DWG: =DOC_NO_FAB_DWG

PCB DWG: =PCB_DWG_NO

PROJECT: Smart Street Lighting System

U of Pennsylvania
Philadelphia
PA
19104

PROJECT REVISION: =Copy(proiver,1,20)

DOCUMENT REVISION: =Copy(vercontrol,1,20)

DESIGN ITEM:

TITLE: Smart Street Lighting System

SIZE: B

CAGE CODE: =CAGE_CODE

DWG NO.: =DOC_NO_SCH_DWG

REV

SCALE: *

FILE NAME: StarterBoardFabrication.PCBDWT

SHEET 4 OF 12

=DOC_NO_SCH_DWG
REV

THIS DOCUMENT AND THE DATA DISCLOSED HEREIN OR HEREWITH IS THE PROPERTY OF ALTIUM LIMITED AND MAY BE FREELY DISTRIBUTED IN WHOLE. NO RIGHTS ARE RESERVED OR EXPRESS OR IMPLIED WARANTEE GIVEN.

| REVISION | DESCRIPTION | DATE | APPROVED |
|---|---|---|---|
| | | | |

Top Paste (Scale 3:1)

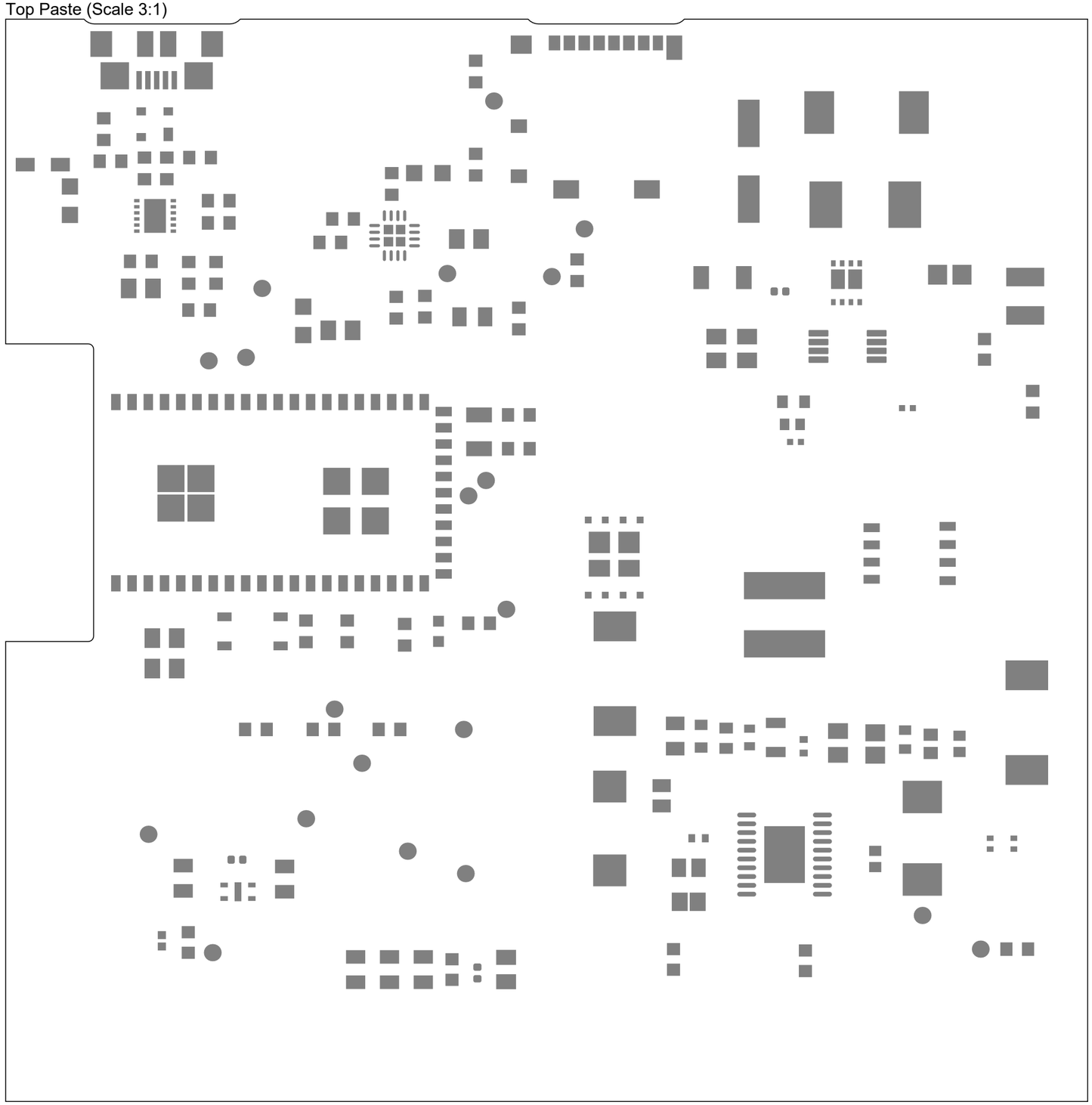

| APPROVALS | | DATE |
|---|---|---|
| ENG: | Eduardo Garcia | --/--/-- |
| DSN: | Arvind Balaji Narayan, Gopik A | --/--/-- |
| CHK: | Eduardo Garcia | --/--/-- |

REFERENCE DOCUMENTS

BOM: =DOC_NO_BOM

ASSY DWG: =DOC_NO_ASSY_DWG

FAB DWG: =DOC_NO_FAB_DWG

PCB DWG: =PCB_DWG_NO

PROJECT: Smart Street Lighting System

U of Pennsylvania
Philadelphia
PA
19104

PROJECT REVISION: =Copy(projver,1,20)

DOCUMENT REVISION: =Copy(vercontrol,1,20)

DESIGN ITEM:

TITLE

# Smart Street Lighting System

| SIZE | CAGE CODE | DWG NO. | REV |
|---|---|---|---|
| B | =CAGE_CODE | =DOC_NO_SCH_DWG | |

SCALE: * FILE NAME: StarterBoardFabrication.PCBDwf SHEET 5 OF 12

=DOC_NO_SCH_DWG

THIS DOCUMENT AND THE DATA DISCLOSED HEREIN OR HEREWITH IS THE PROPERTY OF ALTIUM LIMITED AND MAY BE FREELY DISTRIBUTED IN WHOLE. NO RIGHTS ARE RESERVED OR EXPRESS OR IMPLIED WARANTEE GIVEN.

| REVISION | DESCRIPTION | DATE | APPROVED |
|---|---|---|---|
| | | | |

Top Layer (Scale 3:1)

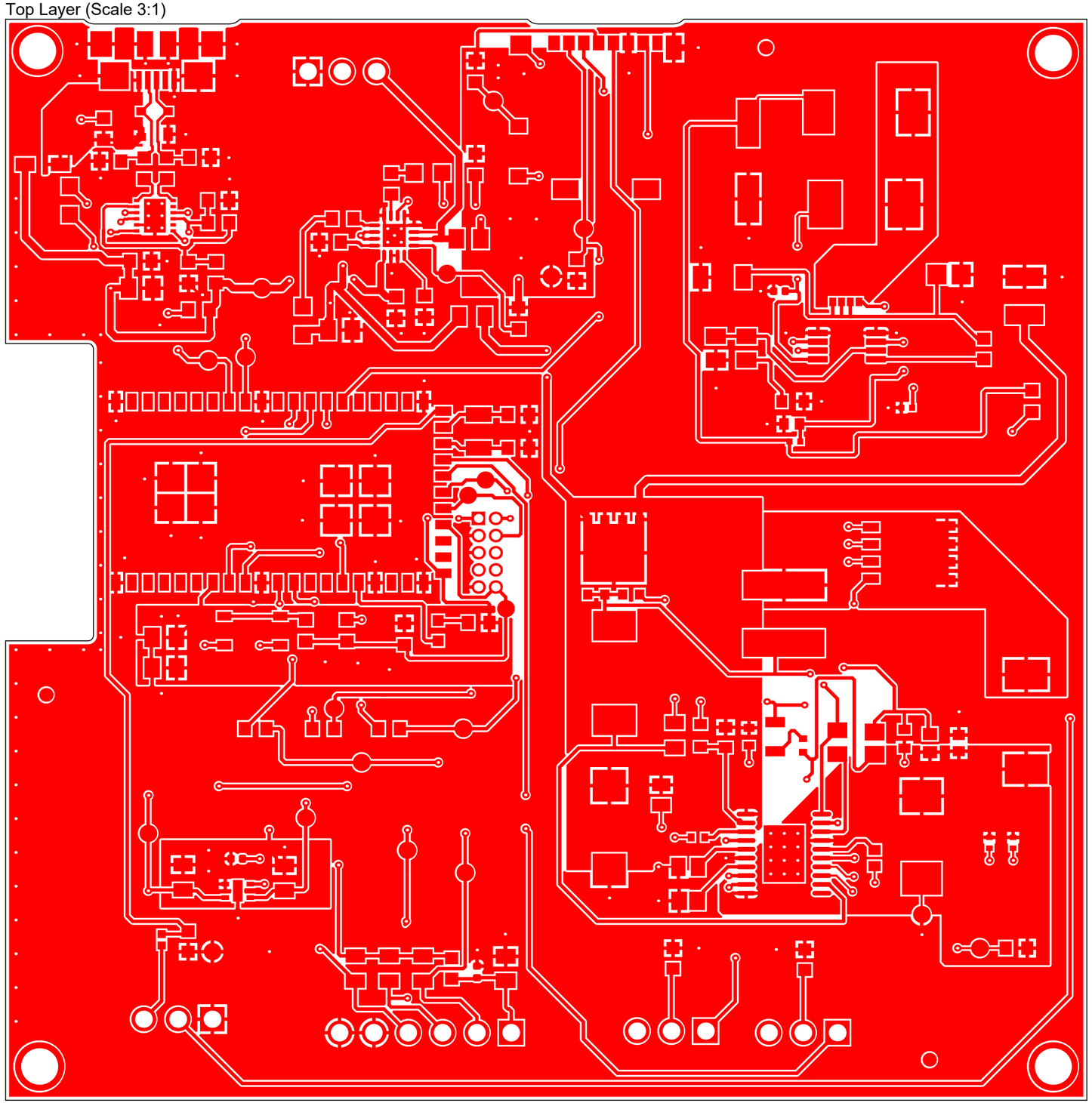

| APPROVALS | | DATE |
|---|---|---|
| ENG: | Eduardo Garcia | --/--/-- |
| DSN: | Arvind Balaji Narayan/ Gopik A | --/--/-- |
| CHK: | Eduardo Garcia | --/--/-- |

REFERENCE DOCUMENTS

BOM: =DOC_NO_BOM

ASSY DWG: =DOC_NO_ASSY_DWG

FAB DWG: =DOC_NO_FAB_DWG

PCB DWG: =PCB_DWG_NO

PROJECT: Smart Street Lighting System

U of Pennsylvania
Philadelphia
PA
19104

PROJECT REVISION: =Copy(proiver,1,20)

DOCUMENT REVISION: =Copy(vercontrol,1,20)

DESIGN ITEM: *

TITLE

# Smart Street Lighting System

| SIZE | CAGE CODE | DWG NO. | REV |
|---|---|---|---|
| B | =CAGE_CODE | =DOC_NO_SCH_DWG | |

SCALE: * FILE NAME: StarterBoardFabrication.PCBDwf SHEET 6 OF 12

=DOC_NO_SCH_DWG

THIS DOCUMENT AND THE DATA DISCLOSED HEREIN OR HEREWITH IS THE PROPERTY OF ALTIUM LIMITED AND MAY BE FREELY DISTRIBUTED IN WHOLE. NO RIGHTS ARE RESERVED OR EXPRESS OR IMPLIED WARANTEE GIVEN.

| REVISION | DESCRIPTION | DATE | APPROVED |
|---|---|---|---|
| | | | |

PowerPlane (Scale 3:1)

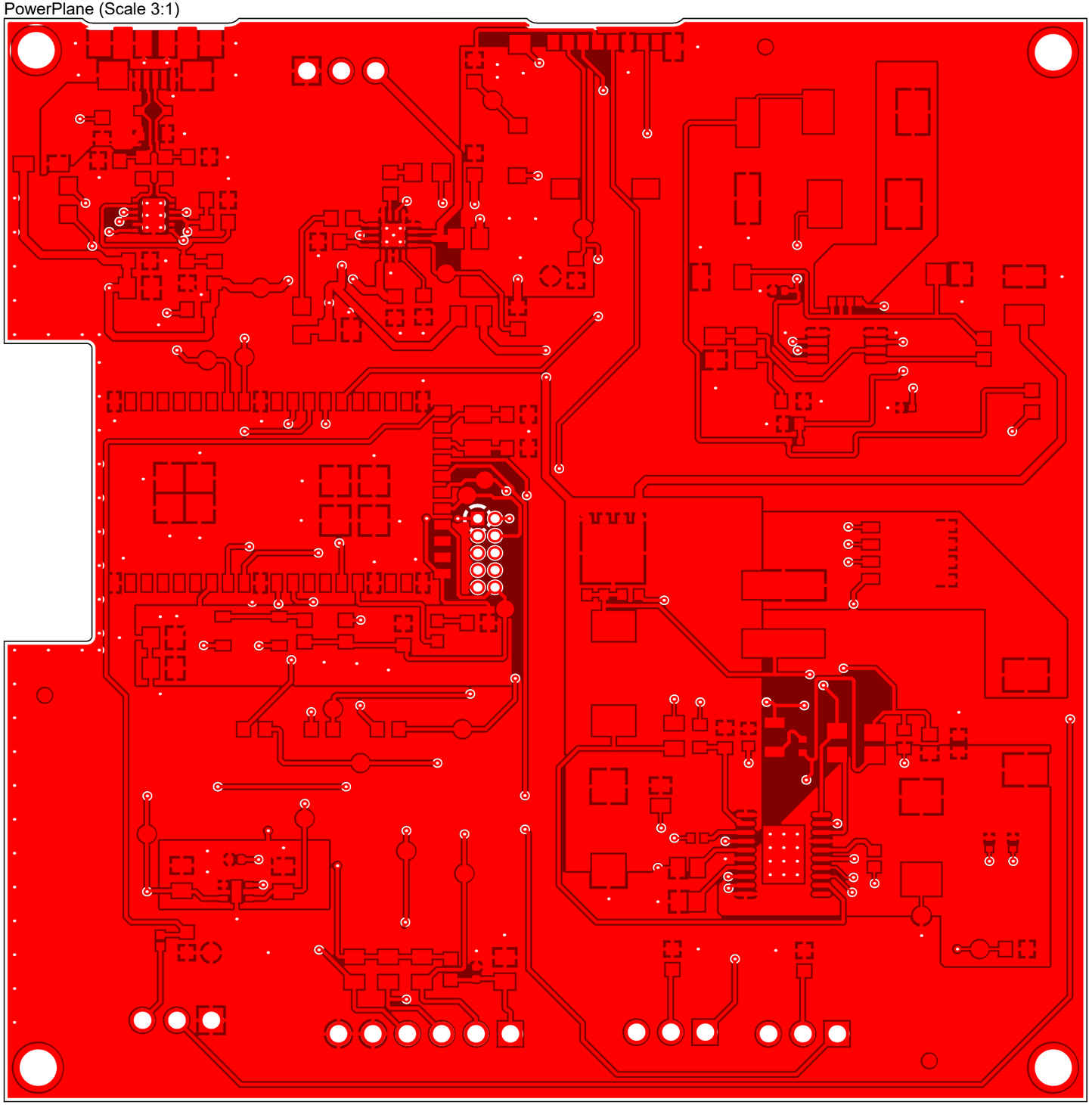

| APPROVALS | | DATE |
|---|---|---|
| ENG: | Eduardo Garcia | --/--/-- |
| DSN: | Arvind Balaji Narayan/ Gopik A | --/--/-- |
| CHK: | Eduardo Garcia | --/--/-- |

REFERENCE DOCUMENTS

BOM: =DOC_NO_BOM

ASSY DWG: =DOC_NO_ASSY_DWG

FAB DWG: =DOC_NO_FAB_DWG

PCB DWG: =PCB_DWG_NO

PROJECT: Smart Street Lighting System

U of Pennsylvania
Philadelphia
PA
19104

PROJECT REVISION: =Copy(projver,1,20)

DOCUMENT REVISION: =Copy(vercontrol,1,20)

DESIGN ITEM:

TITLE

# Smart Street Lighting System

SIZE: B

CAGE CODE: =CAGE_CODE

DWG NO.: =DOC_NO_SCH_DWG

REV

SCALE: *

FILE NAME: StarterBoardFabrication.PCBDwf

SHEET 7 OF 12

=DOC_NO_SCH_DWG

THIS DOCUMENT AND THE DATA DISCLOSED HEREIN OR HEREWITH IS THE PROPERTY OF ALTIUM LIMITED AND MAY BE FREELY DISTRIBUTED IN WHOLE. NO RIGHTS ARE RESERVED OR EXPRESS OR IMPLIED WARANTEE GIVEN.

=DOC_NO_SCH_DWG
DWG. NO REV SHT

| REVISION | DESCRIPTION | DATE | APPROVED |
|---|---|---|---|
| | | | |

GroundPlane (Scale 3:1)

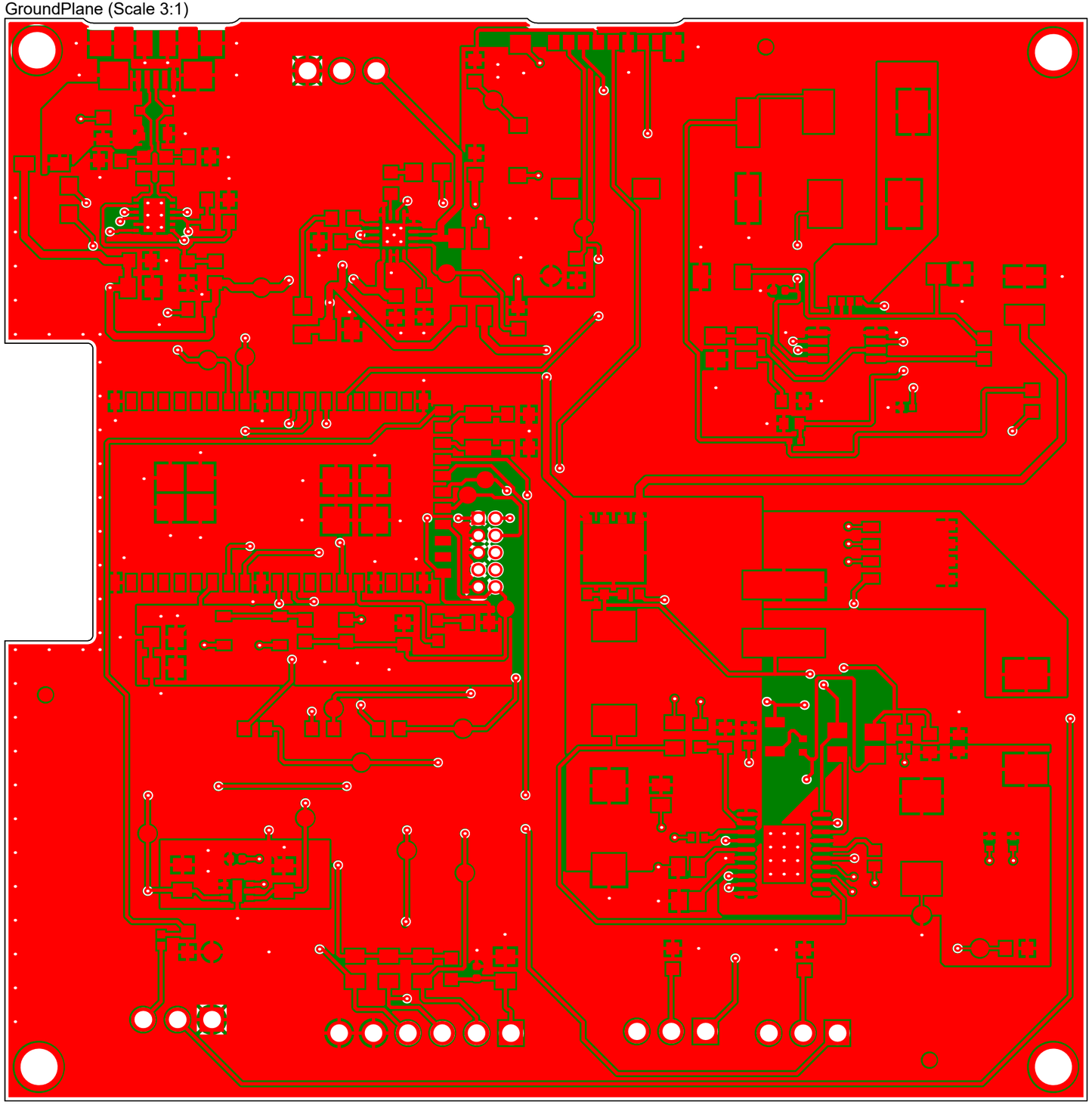

| APPROVALS | | DATE |
|---|---|---|
| ENG: | Eduardo Garcia | --/--/-- |
| DSN: | Arvind Balaji Narayan/ Gopik Krishna | --/--/-- |
| CHK: | Eduardo Garcia | --/--/-- |

REFERENCE DOCUMENTS

BOM: =DOC_NO_BOM
ASSY DWG: =DOC_NO_ASSY_DWG
FAB DWG: =DOC_NO_FAB_DWG
PCB DWG: =PCB_DWG_NO

PROJECT: Smart Street Lighting System

U of Pennsylvania
Philadelphia
PA
19104

PROJECT REVISION: =Copy(projver,1,20)
DOCUMENT REVISION: =Copy(vercontrol,1,20)
DESIGN ITEM:

TITLE: Smart Street Lighting System

SIZE: B
CAGE CODE: =CAGE_CODE
DWG NO.: =DOC_NO_SCH_DWG
REV:

SCALE: *
FILE NAME: StarterBoardFabrication.PCBDwf
SHEET 8 OF 12

=DOC_NO_SCH_DWG
REV
SHT

THIS DOCUMENT AND THE DATA DISCLOSED HEREIN OR HEREWITH IS THE PROPERTY OF ALTIUM LIMITED AND MAY BE FREELY DISTRIBUTED IN WHOLE. NO RIGHTS ARE RESERVED OR EXPRESS OR IMPLIED WARANTEE GIVEN.

=DOC_NO_SCH_DWG
DWG NO REV SHT

| REVISION | DESCRIPTION | DATE | APPROVED |
|---|---|---|---|
| | | | |

Bottom Layer (Scale 3:1)

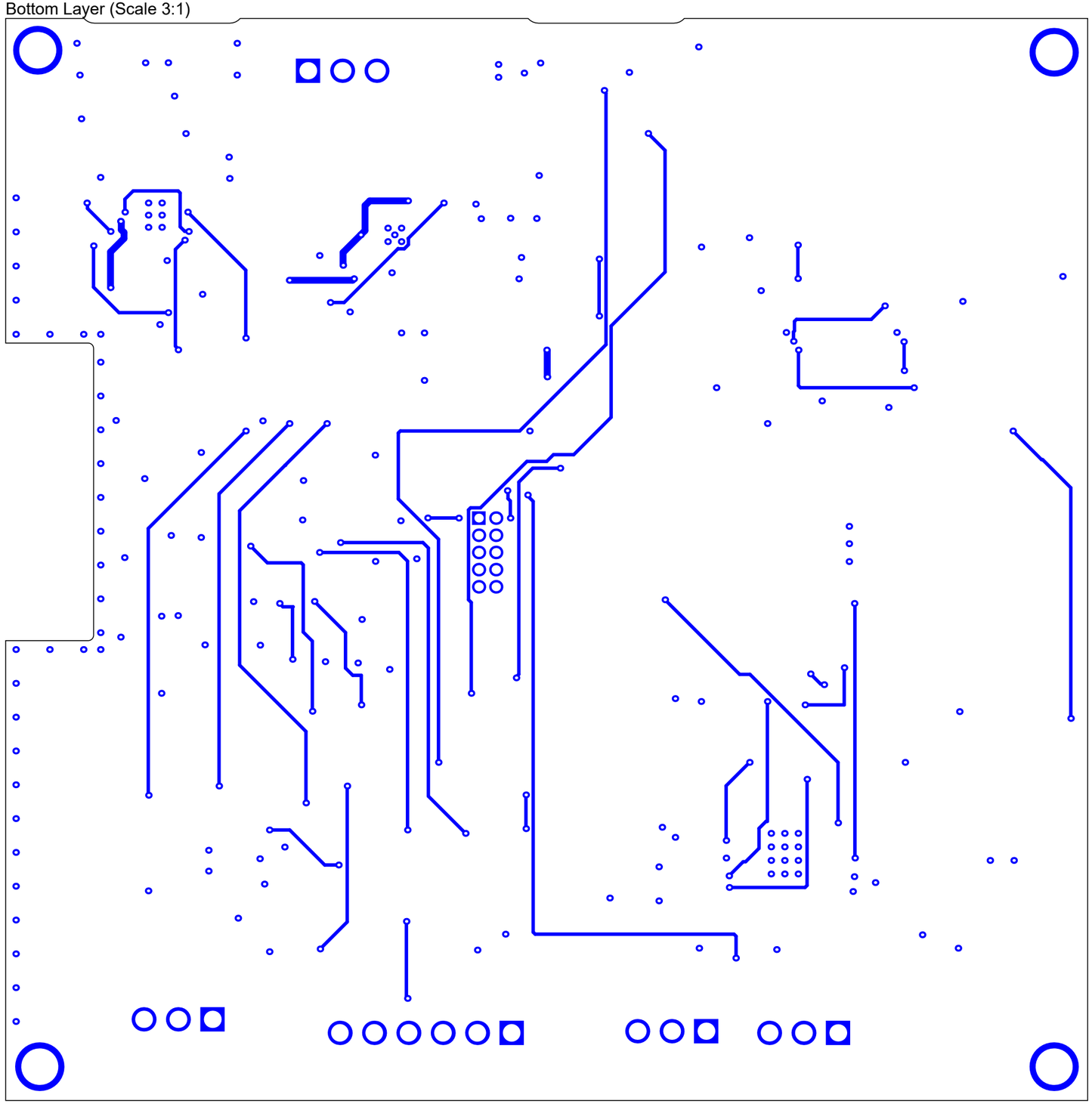

| APPROVALS | | DATE |
|---|---|---|
| ENG: | Eduardo Garcia | --/--/-- |
| DSN: | Arvind Balaji Narayan/ Gopik A | --/--/-- |
| CHK: | Eduardo Garcia | --/--/-- |

REFERENCE DOCUMENTS
BOM: =DOC_NO_BOM
ASSY DWG: =DOC_NO_ASSY_DWG
FAB DWG: =DOC_NO_FAB_DWG
PCB DWG: =PCB_DWG_NO

PROJECT: Smart Street Lighting System

U of Pennsylvania
Philadelphia
PA
19104

PROJECT REVISION: =Copy(projver,1,20)
DOCUMENT REVISION: =Copy(vercontrol,1,20)
DESIGN ITEM: *

TITLE
# Smart Street Lighting System

SIZE: B
CAGE CODE: =CAGE_CODE
DWG NO. =DOC_NO_SCH_DWG
REV
SCALE: *
FILE NAME: StarterBoardFabrication.PCBDwf
SHEET 9 OF 12

=DOC_NO_SCH_DWG
REV
SHT

THIS DOCUMENT AND THE DATA DISCLOSED HEREIN OR HEREWITH IS THE PROPERTY OF ALTIUM LIMITED AND MAY BE FREELY DISTRIBUTED IN WHOLE. NO RIGHTS ARE RESERVED OR EXPRESS OR IMPLIED WARANTEE GIVEN.

=DOC_NO_SCH_DWG
DWG_NO REV SHT

| REVISION | DESCRIPTION | DATE | APPROVED |
|---|---|---|---|
| | | | |

Bottom Paste (Scale 3:1)

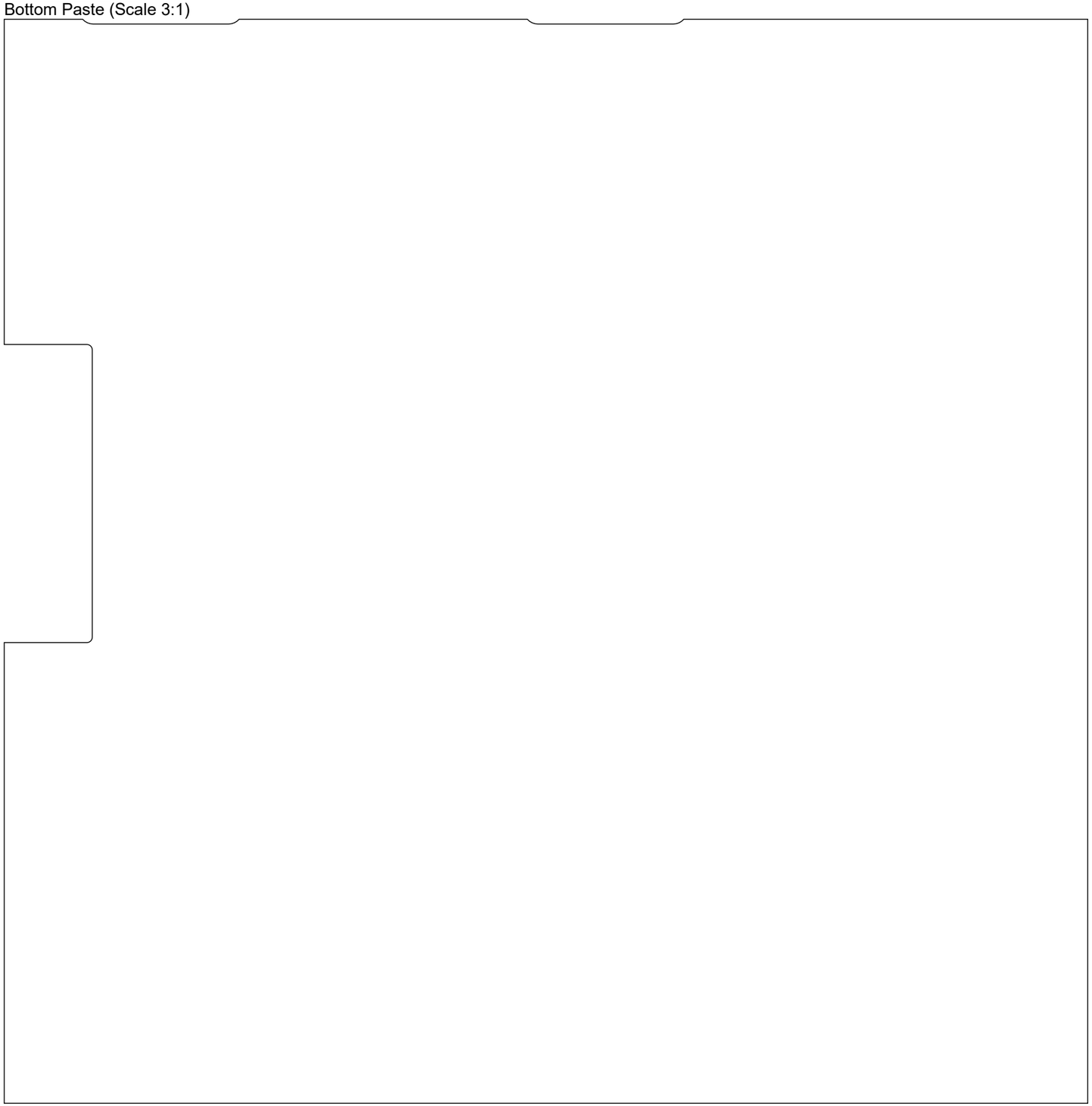

| APPROVALS | | DATE |
|---|---|---|
| ENG: | Eduardo Garcia | --/--/-- |
| DSN: | Arvind Balaji Narayan/ Gopik Krishna | |
| CHK: | Eduardo Garcia | --/--/-- |

REFERENCE DOCUMENTS

BOM: =DOC_NO_BOM

ASSY DWG: =DOC_NO_ASSY_DWG

FAB DWG: =DOC_NO_FAB_DWG

PCB DWG: =PCB_DWG_NO

PROJECT: Smart Street Lighting System

Penn Engineering, University of Pennsylvania
U of Pennsylvania
Philadelphia
PA
19104

PROJECT REVISION: =Copy(projver,1,20)

DOCUMENT REVISION: =Copy(vercontrol,1,20)

DESIGN ITEM:

TITLE

# Smart Street Lighting System

| SIZE | CAGE CODE | DWG NO. | REV |
|---|---|---|---|
| B | =CAGE_CODE | =DOC_NO_SCH_DWG | |

SCALE: * FILE NAME: StarterBoardFabrication.PCBDwf SHEET 10 OF 12

=DOC_NO_SCH_DWG

THIS DOCUMENT AND THE DATA DISCLOSED HEREIN OR HEREWITH IS THE PROPERTY OF ALTIUM LIMITED AND MAY BE FREELY DISTRIBUTED IN WHOLE. NO RIGHTS ARE RESERVED OR EXPRESS OR IMPLIED WARANTEE GIVEN.

| REVISION | DESCRIPTION | DATE | APPROVED |
|---|---|---|---|
| | | | |

Bottom Solder (Scale 3:1)

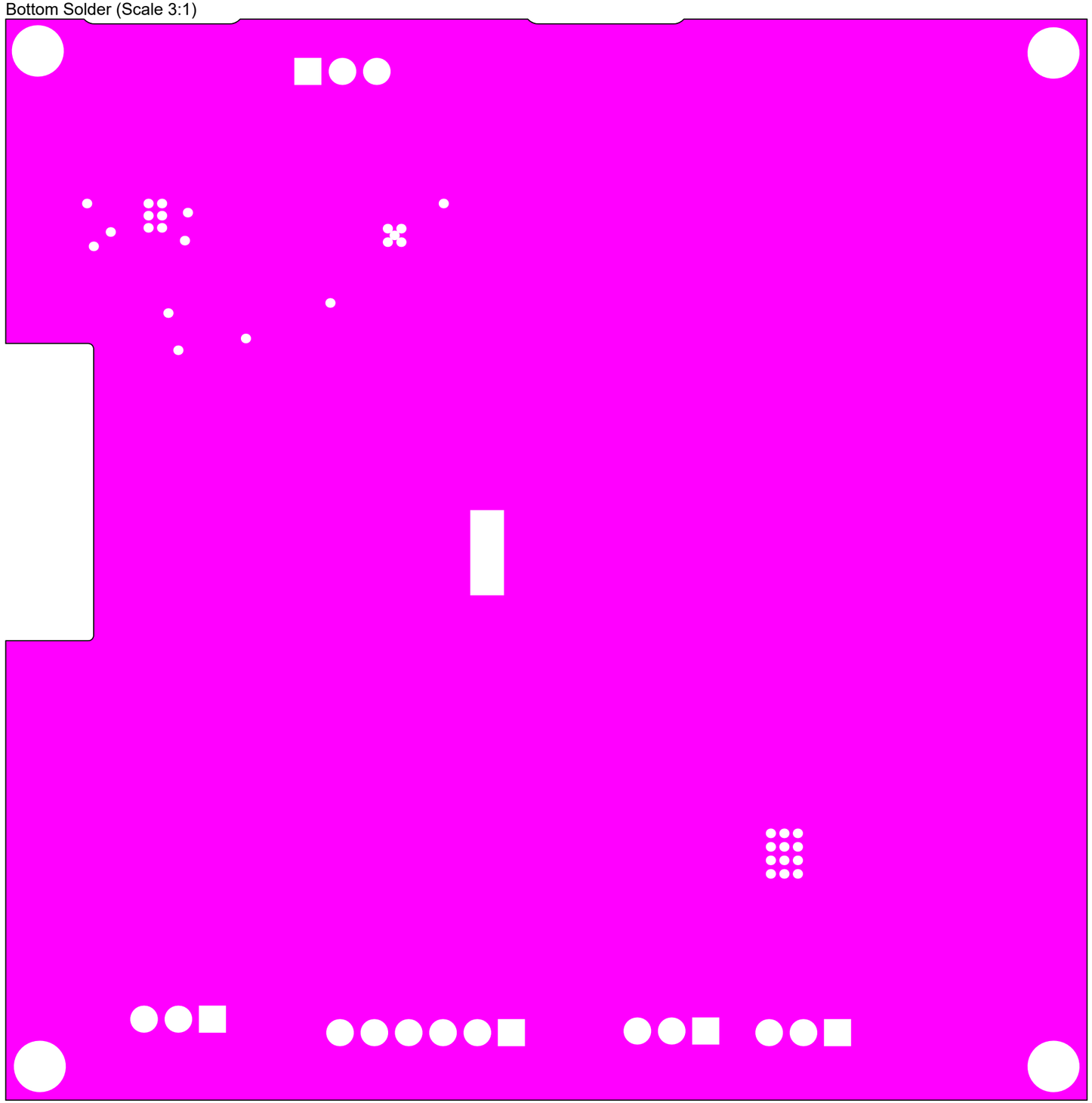

| APPROVALS | | DATE |
|---|---|---|
| ENG: | Eduardo Garcia | --/--/-- |
| DSN: | Arvind Balaji Narayan/ Gopik A | --/--/-- |
| CHK: | Eduardo Garcia | --/--/-- |

REFERENCE DOCUMENTS

BOM: =DOC_NO_BOM

ASSY DWG: =DOC_NO_ASSY_DWG

FAB DWG: =DOC_NO_FAB_DWG

PCB DWG: =PCB_DWG_NO

PROJECT: Smart Street Lighting System

U of Pennsylvania
Philadelphia
PA
19104

PROJECT REVISION: =Copy(projver,1,20)

DOCUMENT REVISION: =Copy(vercontrol,1,20)

DESIGN ITEM:

TITLE: Smart Street Lighting System

SIZE: B | CAGE CODE: =CAGE_CODE | DWG NO. =DOC_NO_SCH_DWG | REV

SCALE: * | FILE NAME: StarterBoardFabrication.PCBDwf | SHEET 11 OF 12

=DOC_NO_SCH_DWG

THIS DOCUMENT AND THE DATA DISCLOSED HEREIN OR HEREWITH IS THE PROPERTY OF ALTIUM LIMITED AND MAY BE FREELY DISTRIBUTED IN WHOLE. NO RIGHTS ARE RESERVED OR EXPRESS OR IMPLIED WARANTEE GIVEN.

=DOC_NO_SCH_DWG
DWG. NO REV SHT

| REVISION | DESCRIPTION | DATE | APPROVED |
|---|---|---|---|
| | | | |

Bottom Overlay (Scale 3:1)

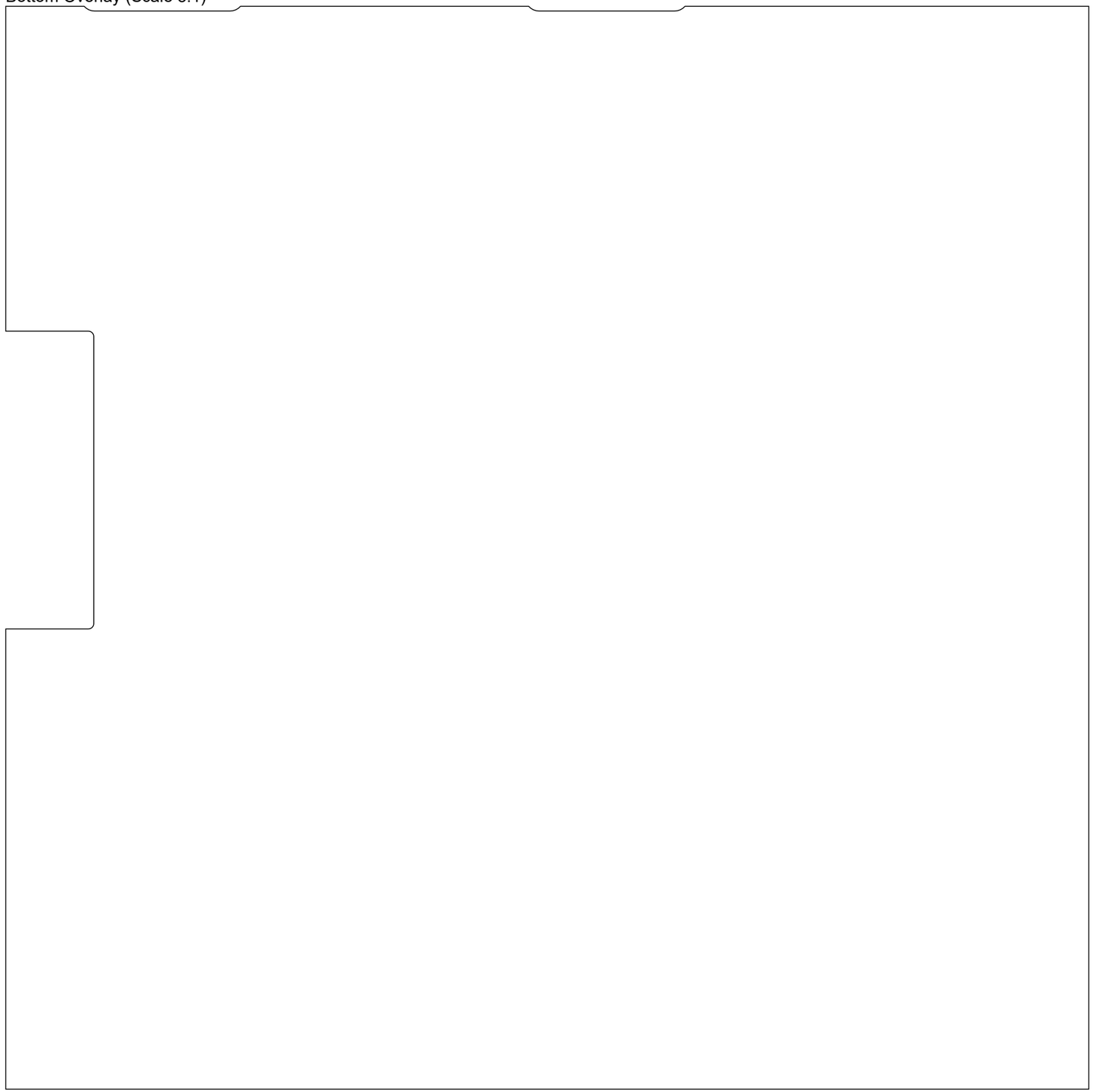

| APPROVALS | | DATE |
|---|---|---|
| ENG: | Eduardo Garcia | --/--/-- |
| DSN: | Arvind Balaji Narayan/ Gopik Krishna | |
| CHK: | Eduardo Garcia | --/--/-- |

REFERENCE DOCUMENTS

BOM: =DOC_NO_BOM

ASSY DWG: =DOC_NO_ASSY_DWG

FAB DWG: =DOC_NO_FAB_DWG

PCB DWG: =PCB_DWG_NO

PROJECT: Smart Street Lighting System

U of Pennsylvania
Philadelphia
PA
19104

PROJECT REVISION: =Copy(projver,1,20)

DOCUMENT REVISION: =Copy(vercontrol,1,20)

DESIGN ITEM:

TITLE

# Smart Street Lighting System

SIZE: B

CAGE CODE: =CAGE_CODE

DWG NO. =DOC_NO_SCH_DWG

REV

SCALE: *

FILE NAME: StarterBoardFabrication.PCBDwf

SHEET 12 OF 12

=DOC_NO_SCH_DWG

THIS DOCUMENT AND THE DATA DISCLOSED HEREIN OR HEREWITH IS THE PROPERTY OF ALTIUM LIMITED AND MAY BE FREELY DISTRIBUTED IN WHOLE. NO RIGHTS ARE RESERVED OR EXPRESS OR IMPLIED WARANTEE GIVEN.

=DOC_NO_SCH_DWG
DWG. NO REV SHT

| REVISION | DESCRIPTION | DATE | APPROVED |
|---|---|---|---|
| | | | |

## Notes (Unless otherwise specified):

NOTES:

1. THIS ITEM IS ELECTROSTATIC SENSITIVE AND SHALL BE HANDLED ACCORDINGLY

2. WORKMANSHIP WILL CONFORM TO IPC-610 CLASS 2, IPC-7711 WILL APPLY TO ALL REQUIRED REWORK OR MODIFICATION

3. ASSEMBLY IS TO BE IDENTIFIED BY A LABEL INDICATING-
SERIAL NUMBER
PART NUMBER and REVISION
VENDOR
DATE CODE

4. THE SUPPLIED INSERTION DATA FOR THIS PCBA IS PROVIDED TO ASSIST PROGRAMMING, COMPONENT OFFSET AND ROTATION ARE RELATIVE TO THE ENGINEERING DESIGN ENVIRONMENT AND MAY NOT MATCH REEL PACKAGING OR FEED ORIENTATION, COMPONENTS, ESPECIALLY POLARIZED PARTS, MUST BE VERIFIED AGAINST THE ACTUAL PCBA DRAWING TO INSURE PROPER INSTALLATION

View from Bottom side (Scale 3:2)

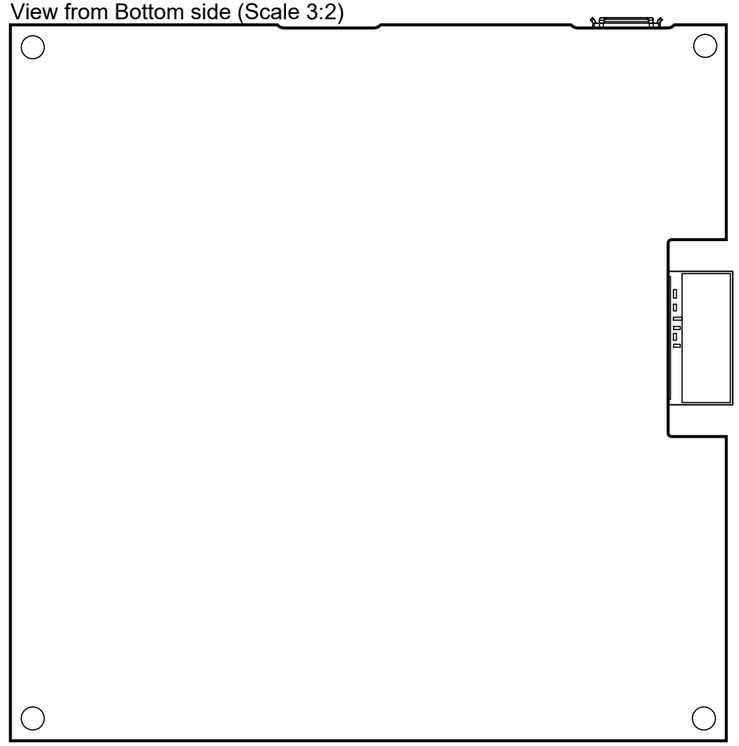

View from Top side (Scale 3:2)

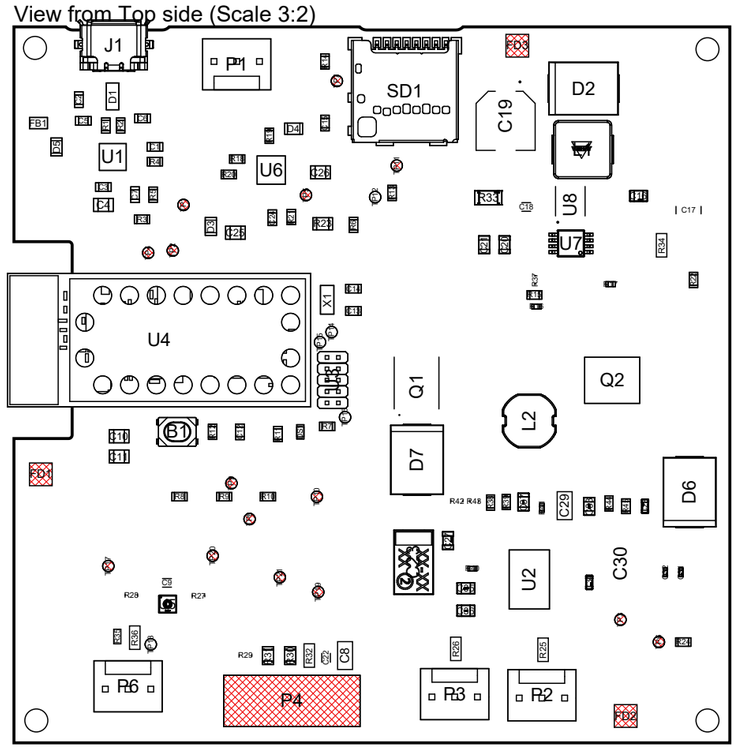


View from Right side (Scale 3:2)

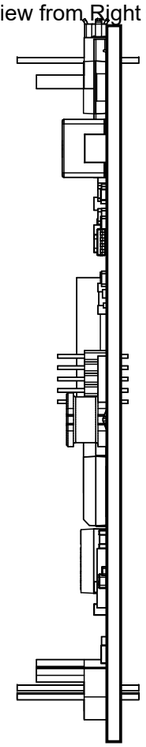

Realistic View

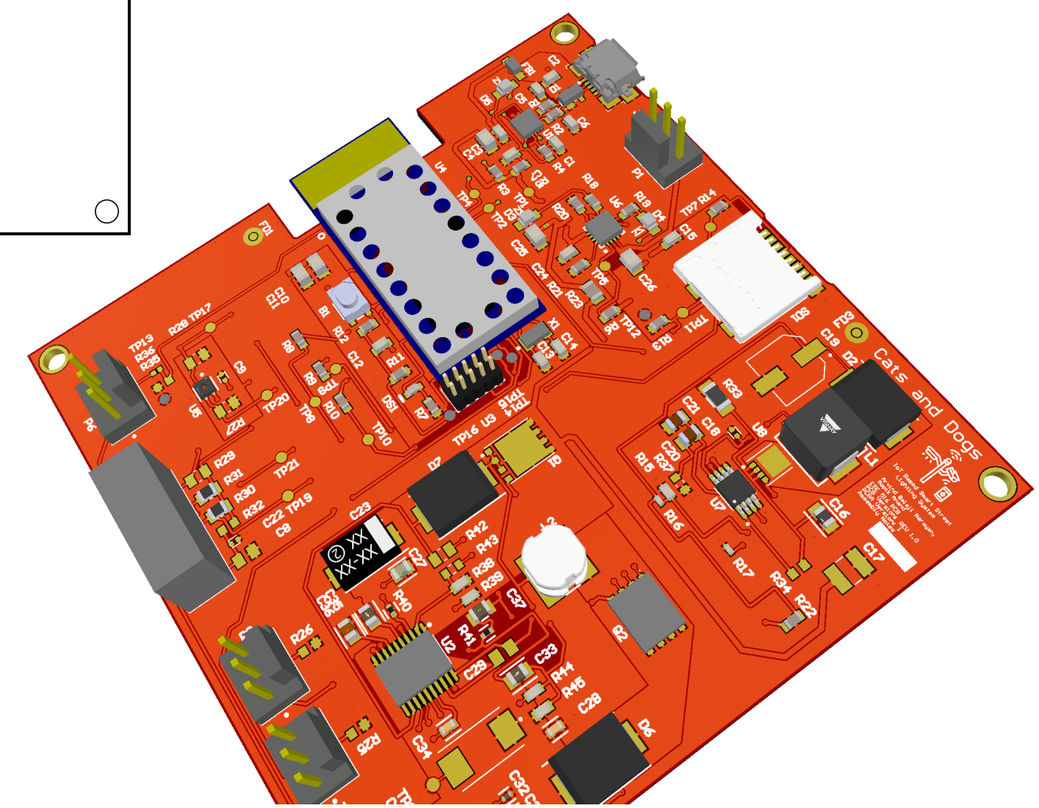


| APPROVALS | | DATE |
|---|---|---|
| ENG: | Eduardo Garcia | --/--/-- |
| DSN: | Arvind Balaji Narayan/ Gopik A | |
| CHK: | Eduardo Garcia | --/--/-- |

REFERENCE DOCUMENTS
BOM: =DOC_NO_BOM
ASSY DWG: =DOC_NO_ASSY_DWG
FAB DWG: =DOC_NO_FAB_DWG
PCB DWG: =PCB_DWG_NO

PROJECT: Smart Street Lighting System
U of Pennsylvania, Philadelphia, PA 19104
PROJECT REVISION: =Copy(proiver,1,20)
DOCUMENT REVISION: =Copy(vercontrol,1,20)
DESIGN ITEM:

TITLE
# Smart Street Lighting System

| SIZE | CAGE CODE | DWG NO. | REV |
|---|---|---|---|
| B | =CAGE_CODE | =DOC_NO_SCH_DWG | |

SCALE: * FILE NAME: StarterBoardAssembly.PCBDWF SHEET 1 OF 3

=DOC_NO_SCH_DWG

THIS DOCUMENT AND THE DATA DISCLOSED HEREIN OR HEREWITH IS THE PROPERTY OF ALTIUM LIMITED AND MAY BE FREELY DISTRIBUTED IN WHOLE. NO RIGHTS ARE RESERVED OR EXPRESS OR IMPLIED WARANTEE GIVEN.

| REVISION | DESCRIPTION | DATE | APPROVED |
|---|---|---|---|
| | | | |

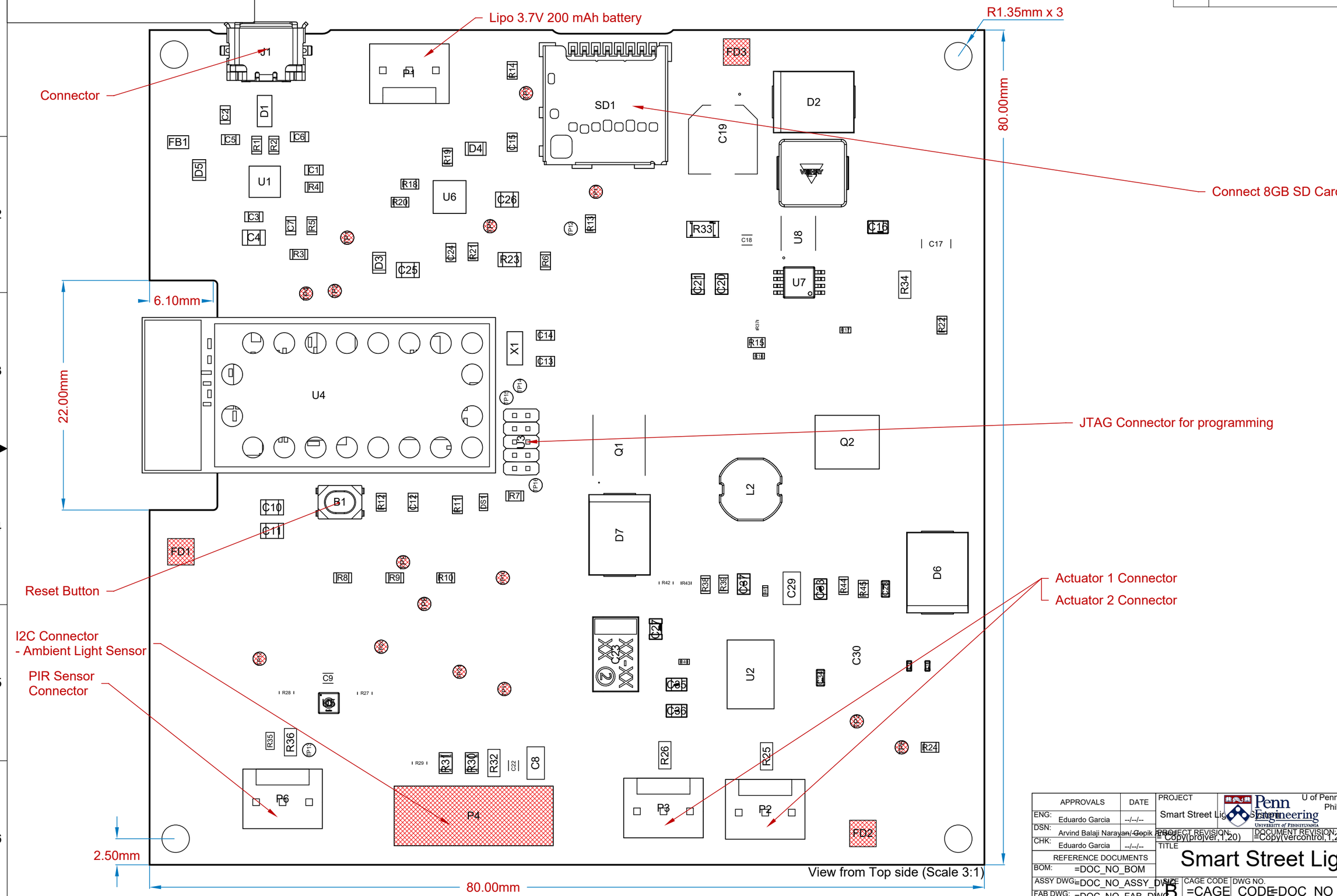


| APPROVALS | DATE |
|---|---|
| ENG: Eduardo Garcia | --/--/-- |
| DSN: Arvind Balaji Narayan/ Gopik Krishna | |
| CHK: Eduardo Garcia | --/--/-- |
| REFERENCE DOCUMENTS | |
| BOM: =DOC_NO_BOM | |
| ASSY DWG: =DOC_NO_ASSY_DWG | |
| FAB DWG: =DOC_NO_FAB_DWG | |
| PCB DWG: =PCB_DWG_NO | |

PROJECT: Smart Street Lighting System

Penn Engineering — U of Pennsylvania, Philadelphia, PA 19104

PROJECT REVISION: =Copy(proiver,1,20)

DOCUMENT REVISION: =Copy(vercontrol,1,20)

DESIGN ITEM:

TITLE: Smart Street Lighting System

SIZE: B | CAGE CODE: =CAGE_CODE | DWG NO.: =DOC_NO_SCH_DWG | REV

SCALE: * | FILE NAME: StarterBoardAssembly.PCBDWF | SHEET 2 OF 3

=DOC_NO_SCH_DWG

THIS DOCUMENT AND THE DATA DISCLOSED HEREIN OR HEREWITH IS THE PROPERTY OF ALTIUM LIMITED AND MAY BE FREELY DISTRIBUTED IN WHOLE. NO RIGHTS ARE RESERVED OR EXPRESS OR IMPLIED WARANTEE GIVEN.

=DOC_NO_SCH_DWG DWG. NO REV SHT

| REVISION | DESCRIPTION | DATE | APPROVED |
|---|---|---|---|
| | | | |

Bill Of Materials

| Line # | Designator | Name | Quantity |
|---|---|---|---|
| 1 | B1 | PTS810 SJK 250 SMTR LFS | 1 |
| 2 | C1, C3, C7, C15 | CAP 100nF 16V 0603(1608) | 4 |
| 3 | C2 | CAP 10nF 16V 0603(1608) | 1 |
| 4 | C4, C25, C26 | CAP 4.7uF 16V 0805(2012) | 3 |
| 5 | C5, C6 | CAP 47pF 16V 0603(1608) | 2 |
| 6 | C8 | Capacitor_10uF | 1 |
| 7 | C9, C18, C22 | Capacitor2_0.1uF | 3 |
| 8 | C10, C11 | CAP 10uF 16V 0805(2012) | 2 |
| 9 | C12, C24 | CAP 1uF 16V 0603(1608) | 2 |
| 10 | C13, C14 | CAP 18pF 16V 0603(1608) | 2 |
| 11 | C16 | CC0805JRNPO9BN101 | 1 |
| 12 | C17 | Capacitor 150uF | 1 |
| 13 | C19 | Capacitor_180uF | 1 |
| 14 | C20 | Capacitor_33nF | 1 |
| | C21 | Capacitor_1.5nF | 1 |
| 16 | C23 | Capacitor_100uF | 1 |
| 17 | C27 | C0805C104M5RACTU | 1 |
| 18 | C28, C34 | C0603C105Z8VACTU | 2 |
| 19 | C29 | Capacitor_0.1uF | 1 |
| 20 | C30 | 6TPF220M9L | 1 |
| 21 | C31, C32 | GRM155R61A474KE15D | 2 |
| 22 | C33 | CL21C151JBANNNC | 1 |
| 23 | C35 | CL21C101JBANNNC | 1 |
| 24 | C36 | C2012C0G1H223J125AA | 1 |
| 25 | C37 | CGA4F2C0G1H153J085AA | 1 |
| 26 | D1 | PRTR5V0U2X,215 | 1 |
| 27 | D2, D6, D7 | Schottkey_Diode_20V_4A | 3 |
| 28 | D3, D5 | LTST-C170CKT | 2 |
| 29 | D4 | LTST-C170GKT | 1 |
| 30 | DS1 | LTST-C191KGKT | 1 |
| 31 | FB1 | BLM21PG221SN1D | 1 |
| 32 | J1 | ZX62R-B-5P | 1 |
| 33 | L1 | IHLP2525EZER4R7M01 | 1 |
| 34 | L2 | Inductor_10uH | 1 |
| 35 | Out of Board Component | PIR Motion Sensor - SEN13285 | 1 |
| 36 | P1, P2, P3, P6 | 640456-3 | 4 |

Bill Of Materials

| Line # | Designator | Name | Quantity |
|---|---|---|---|
| 37 | P4 | 640456-6 | 1 |
| 38 | Q1 | MOSFET_2 | 1 |
| 39 | Q2 | BSC046N02KS G | 1 |
| 40 | R1, R2, R8, R9, R10 | 27R 1% 0603(1608) | 5 |
| 41 | R3, R5, R6, R7, R18, R19 | 1K 1% 0603(1608) | 6 |
| 42 | R4, R22, R24 | Jumper 0603(1608) | 3 |
| 43 | R11, R13, R14 | 10K 1% 0603(1608) | 3 |
| 44 | R12 | 100R 1% 0603(1608) | 1 |
| 45 | R15 | CRCW0603976RFKEA | 1 |
| 46 | R16 | CRCW04028K45FKED | 1 |
| 47 | R17 | CRCW040226K1FKED | 1 |
| 48 | R20, R21 | 1K13 1% 0603(1608) | 2 |
| 49 | R23 | Jumper 0805(2012) | 1 |
| 50 | R25, R26 | Resistor_1k | 2 |
| 51 | R27, R28, R29 | Resistor_10k | 3 |
| 52 | R30, R31 | Resistor_2.2k | 2 |
| 53 | R32, R34 | Resistor_10ohm | 2 |
| 54 | R33 | CSR1206FK10L0 | 1 |
| 55 | R35 | Resistor_29.4k | 1 |
| 56 | R36 | Resistor_11.5k | 1 |
| 57 | R37 | Resistor_3.74k | 1 |
| 58 | R38 | RC0603FR-075K76L | 1 |
| 59 | R39 | RC0603FR-071ML | 1 |
| 60 | R40 | AC0402FR-0718K7L | 1 |
| 61 | R41 | AC0402FR-0723K7L | 1 |
| 62 | R42 | Resistor_50mohms | 1 |
| 63 | R43 | Resistor_4.99k | 1 |
| 64 | R44 | RC0603FR-071KL | 1 |
| 65 | R45 | CRCW06031K69FKEA | 1 |
| 66 | SD1 | 104031-0811 | 1 |
| 67 | U1 | FT234XD-R | 1 |
| 68 | U2 | LM5118MH/NOPB | 1 |
| 69 | U3 | 20021111-00010T4LF | 1 |
| 70 | U4 | SAMW25H18-MR510PB | 1 |
| 71 | U5 | SHTC3 | 1 |
| 72 | U6 | BQ24075RGTRG4 | 1 |
| 73 | U7 | LM3488MM/NOPB | 1 |

| APPROVALS | | DATE |
|---|---|---|
| ENG: | Eduardo Garcia | --/--/-- |
| DSN: | Arvind Balaji Narayan/ Gopik Anil | |
| CHK: | Eduardo Garcia | --/--/-- |

REFERENCE DOCUMENTS
BOM: =DOC_NO_BOM
ASSY DWG: =DOC_NO_ASSY_DWG
FAB DWG: =DOC_NO_FAB_DWG
PCB DWG: =PCB_DWG_NO

PROJECT: Smart Street Lighting System
Penn Engineering, University of Pennsylvania — U of Pennsylvania, Philadelphia PA 19104
PROJECT REVISION: =Copy(projver,1,20)
DOCUMENT REVISION: =Copy(vercontrol,1,20)
DESIGN ITEM #:
TITLE: Smart Street Lighting System

| SIZE | CAGE CODE | DWG NO. | REV |
|---|---|---|---|
| B | =CAGE_CODE | =DOC_NO_SCH_DWG | |

SCALE: * FILE NAME: StarterBoardAssembly.PCBDWT SHEET 3 OF 3

=DOC_NO_SCH_DWG
REV