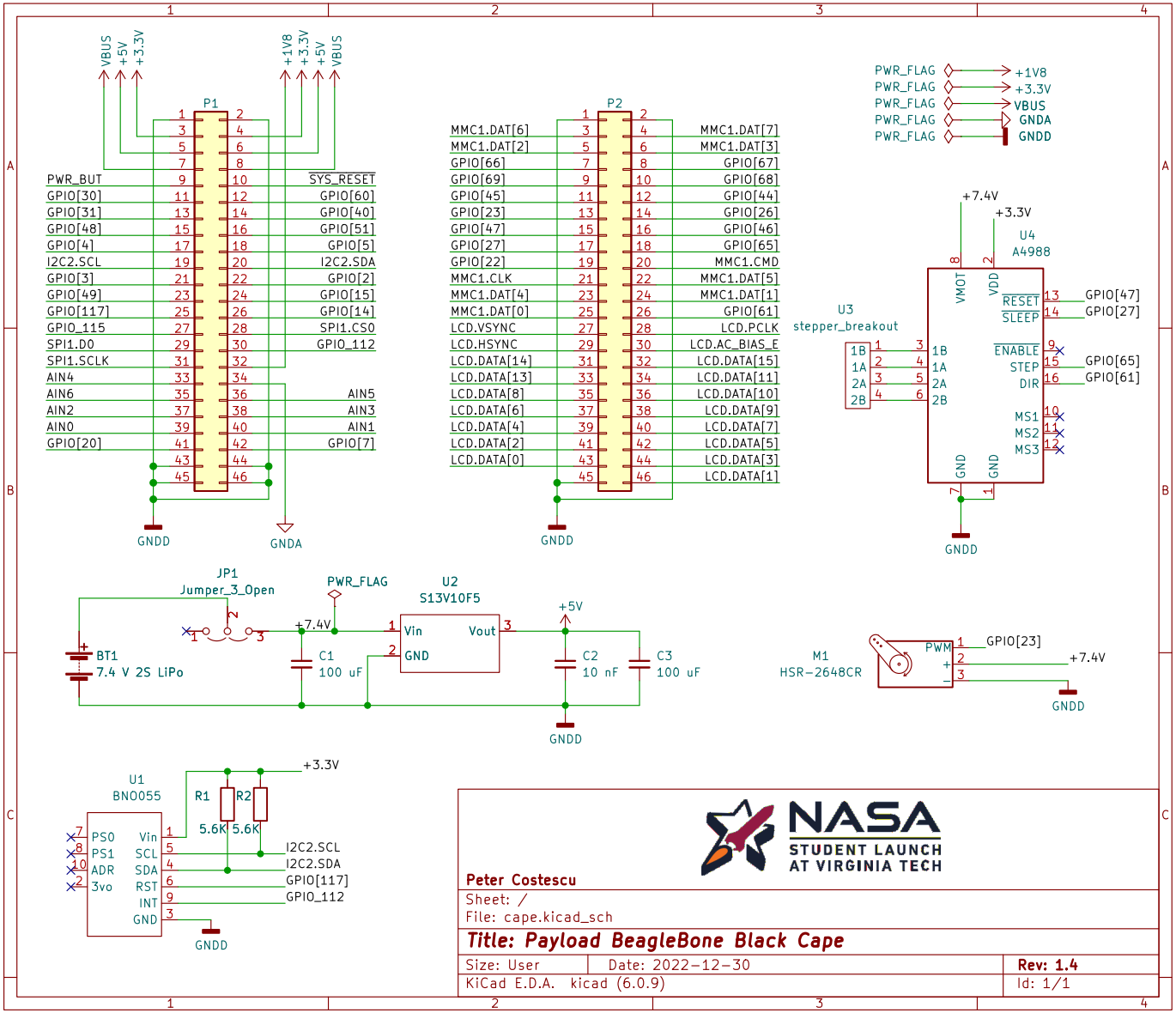
P1
VBUS
+5V
+3.3V
+1V8
+3.3V
+5V
VBUS
PWR_BUT
GPIO[30]
GPIO[31]
GPIO[48]
GPIO[4]
I2C2.SCL
GPIO[3]
GPIO[49]
GPIO[117]
GPIO_115
SPI1.D0
SPI1.SCLK
AIN4
AIN6
AIN2
AIN0
GPIO[20]
SYS_RESET
GPIO[60]
GPIO[40]
GPIO[51]
GPIO[5]
I2C2.SDA
GPIO[2]
GPIO[15]
GPIO[14]
SPI1.CS0
GPIO_112
AIN5
AIN3
AIN1
GPIO[7]
GNDD
GNDA
P2
MMC1.DAT[6]
MMC1.DAT[2]
GPIO[66]
GPIO[69]
GPIO[45]
GPIO[23]
GPIO[47]
GPIO[27]
GPIO[22]
MMC1.CLK
MMC1.DAT[4]
MMC1.DAT[0]
LCD.VSYNC
LCD.HSYNC
LCD.DATA[14]
LCD.DATA[13]
LCD.DATA[8]
LCD.DATA[6]
LCD.DATA[4]
LCD.DATA[2]
LCD.DATA[0]
MMC1.DAT[7]
MMC1.DAT[3]
GPIO[67]
GPIO[68]
GPIO[44]
GPIO[26]
GPIO[46]
GPIO[65]
MMC1.CMD
MMC1.DAT[5]
MMC1.DAT[1]
GPIO[61]
LCD.PCLK
LCD.AC_BIAS_E
LCD.DATA[15]
LCD.DATA[11]
LCD.DATA[10]
LCD.DATA[9]
LCD.DATA[7]
LCD.DATA[5]
LCD.DATA[3]
LCD.DATA[1]
GNDD
PWR_FLAG
+1V8
+3.3V
VBUS
GNDA
GNDD
+7.4V
+3.3V
U4
A4988
VMOT
VDD
RESET
SLEEP
ENABLE
STEP
DIR
MS1
MS2
MS3
GND
GND
GPIO[47]
GPIO[27]
GPIO[65]
GPIO[61]
U3
stepper_breakout
1B
1A
2A
2B
GNDD
JP1
Jumper_3_Open
BT1
7.4 V 2S LiPo
PWR_FLAG
+7.4V
C1
100 uF
U2
S13V10F5
Vin
GND
Vout
+5V
C2
10 nF
C3
100 uF
GNDD
M1
HSR-2648CR
PWM
GPIO[23]
+7.4V
GNDD
U1
BNO055
PS0
PS1
ADR
3vo
Vin
SCL
SDA
RST
INT
GND
R1
R2
5.6K
5.6K
+3.3V
I2C2.SCL
I2C2.SDA
GPIO[117]
GPIO_112
GNDD
NASA
STUDENT LAUNCH
AT VIRGINIA TECH
Peter Costescu
Sheet: /
File: cape.kicad_sch
Title: Payload BeagleBone Black Cape
Size: User
Date: 2022-12-30
Rev: 1.4
KiCad E.D.A. kicad (6.0.9)
Id: 1/1