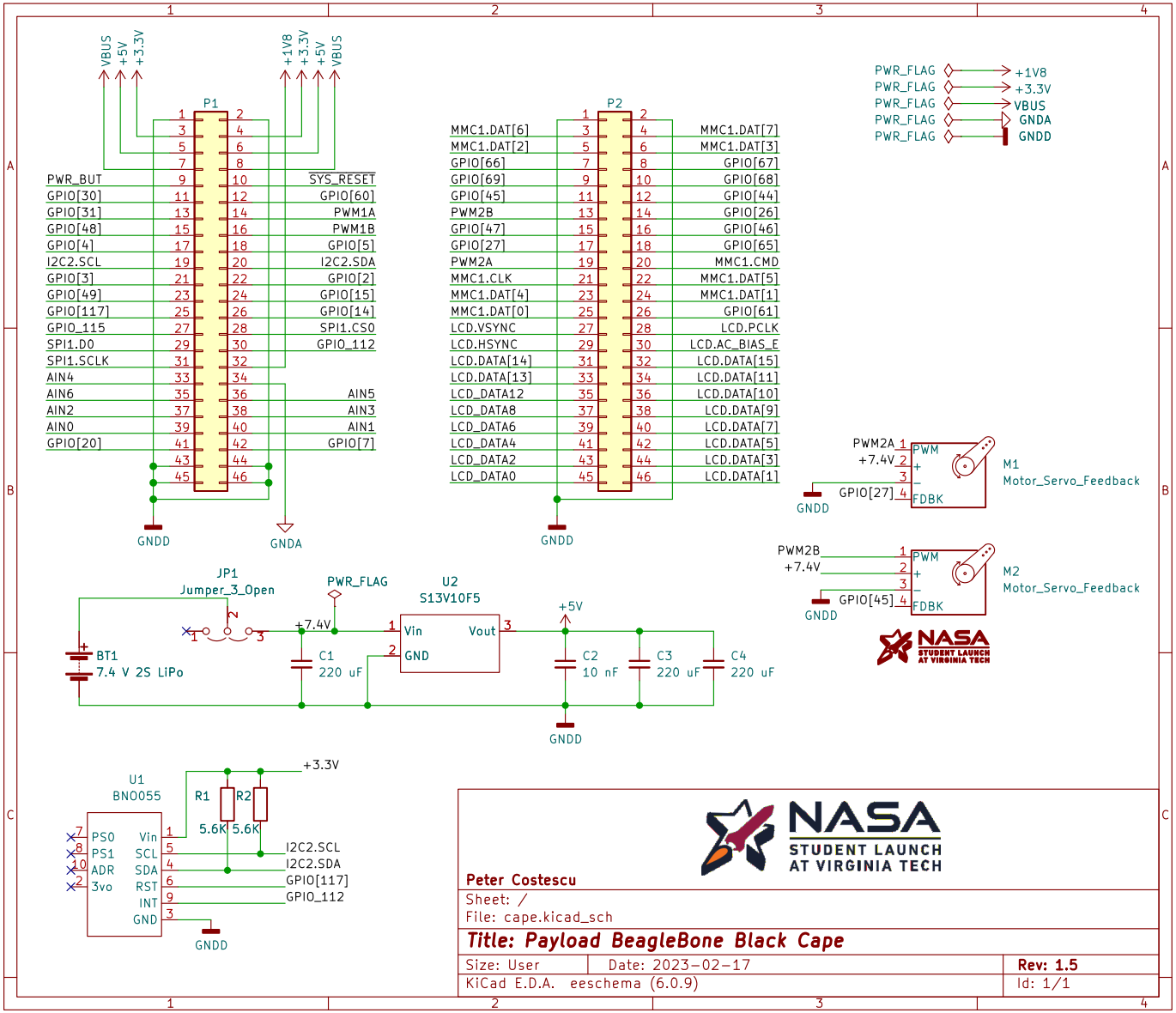

Peter Costescu

Sheet: /

File: cape.kicad_sch

Title: Payload BeagleBone Black Cape

Size: User	Date: 2023-02-17	Rev: 1.5
KiCad E.D.A. eeschema (6.0.9)		Id: 1/1