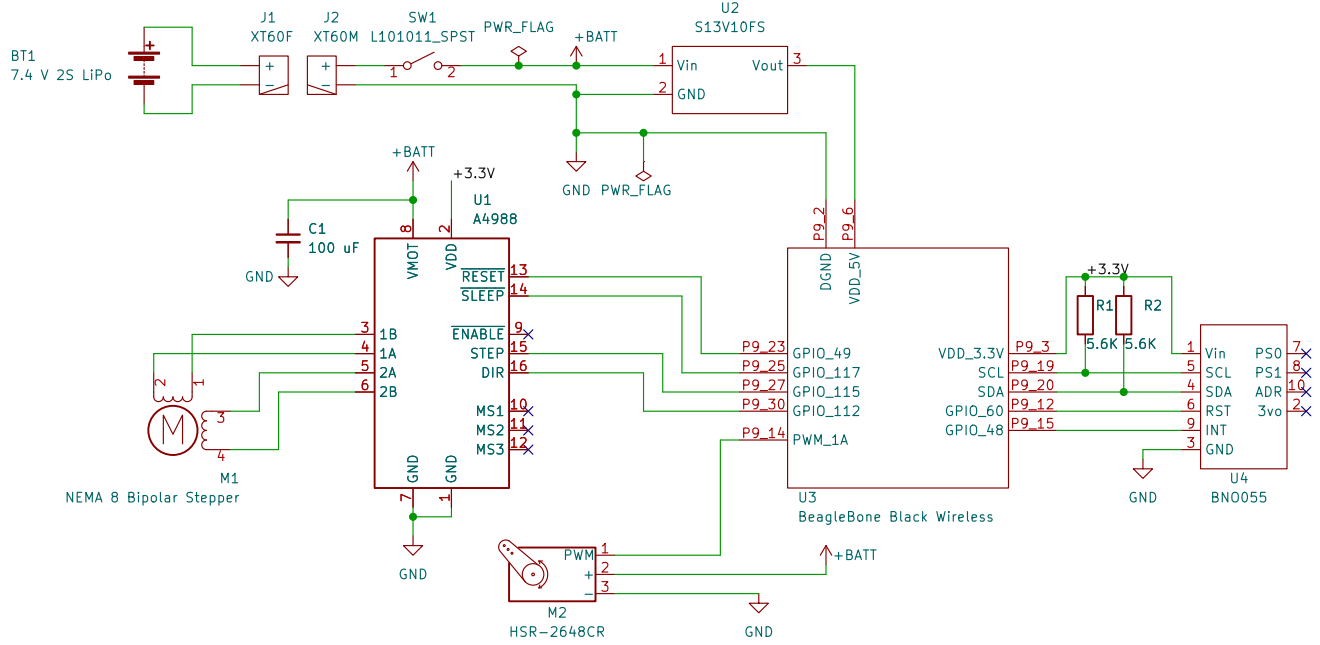

NASA STUDENT LAUNCH AT VIRGINIA TECH

Sheet: /
File: main.kicad_sch

Title: Payload Main Subsystem

Size: A5	Date: 2022-12-29	**Rev: 1.6**
KiCad E.D.A. eeschema (6.0.9)		Id: 1/1