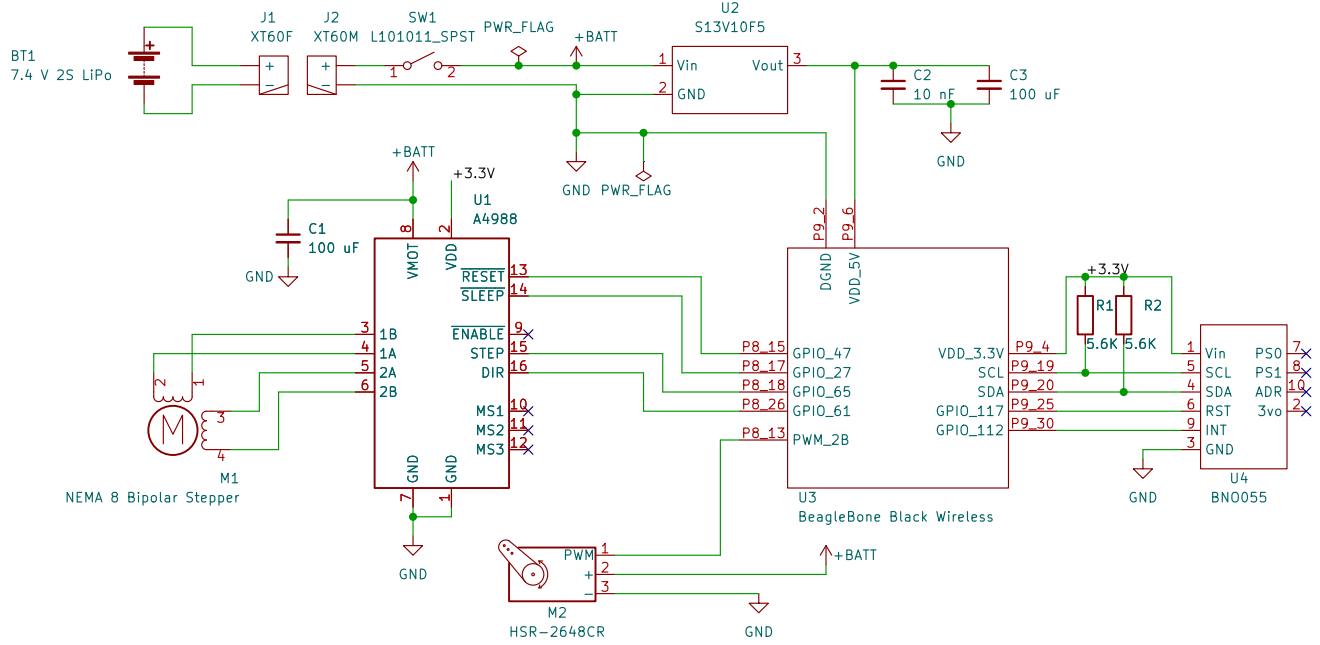

NASA STUDENT LAUNCH AT VIRGINIA TECH

Sheet: /
File: main.kicad_sch

Title: Payload Main Subsystem

Size: A5	Date: 2022-12-30	**Rev: 1.7**
KiCad E.D.A. kicad (6.0.9)		Id: 1/1