Honeywell

TotalPlant Solution (TPS) System

# TPS Fieldbus

## Theory

FB90-630

R630

12/01

Honeywell

TotalPlant

# Notices and Trademarks

**Copyright 2001 by Honeywell International Inc.**
**Release 630  December 17, 2001**

While this information is presented in good faith and believed to be accurate, Honeywell disclaims the implied warranties of merchantability and fitness for a particular purpose and makes no express warranties except as may be stated in its written agreement with and for its customers.

In no event is Honeywell liable to anyone for any indirect, special or consequential damages. The information and specifications in this document are subject to change without notice.

Honeywell and **TotalPlant** are registered trademarks of Honeywell International Inc.

Other brand or product names are trademarks of their respective owners.

Honeywell

Industrial Automation and Control

16404 North Black Canyon Highway

Phoenix, AZ  85053

**1-800 343-0228**

# About This Document

This document describes the use of blocks, objects, and alarms in user applications. It also describes device management, Fieldbus IOP, and considerations for Fieldbus control.

## Release Information

| Document Name | Document ID | Release Number | Publication Date |
|---|---|---|---|
| TPS Fieldbus Theory - FB90 | FB90-630 | 630 | 12/01 |

## Contacts

### World Wide Web

The following lists Honeywell's World Wide Web sites that will be of interest to our industrial automation and control customers.

| Honeywell Organization | WWW Address (URL) |
|---|---|
| Corporate | *http://www.honeywell.com* |
| Industrial Automation and Control | *http://www.iac.honeywell.com* |
| International | *http://content.honeywell.com/global* |

# Telephone

Contact us by telephone at the numbers listed below.

| | Organization | Phone Number | |
|---|---|---|---|
| United States and Canada | Honeywell Inc.<br>Industrial Automation and Control | 1-800-343-0228<br>1-800-525-7439<br>1-800-423-9883 | Sales<br>Service<br>Tech. Support |
| Asia Pacific | Honeywell Asia Pacific Inc.<br>Hong Kong | (852) 28298298 | |
| Europe | Honeywell PACE<br>Brussels, Belgium | [32-2] 728-2111 | |
| Latin America | Honeywell Inc.<br>Sunrise, Florida U.S.A. | (954) 845-2600 | |

## Symbol Definitions

The following table lists those symbols used in this document to denote certain conditions.

| Symbol | Definition |
|---|---|
| | **ATTENTION:** Identifies information that requires special consideration. |
| | **TIP:** Identifies advice or hints for the user, often in terms of performing a task. |
| | **REFERENCE -EXTERNAL:** Identifies an additional source of information outside of the bookset. |
| | **REFERENCE - INTERNAL:** Identifies an additional source of information within the bookset. |

# Contents


**1. FIELDBUS COMMUNICATIONS THEORY .....17**

**1.1 Communication Layers .....17**
FOUNDATION Fieldbus Overview.....17
Relationship to the OSI model.....17
Fieldbus Message Specification (FMS).....18
Physical Layer.....18
Communications Stack .....19
Scheduled Communication .....20
Unscheduled Communication .....21
Block Based User Application .....22
Communication between H1 Segments .....22

**2. BLOCKS IN THE USER APPLICATIONS .....23**

**2.1 Function Block Application Process (FBAP) .....23**
Function Block Application Process Elements .....23
What is an FBAP?.....23
Block parameters .....24

**2.2 Block Descriptions.....24**
FBAP Elements.....24
Device Objects.....24
Block Objects .....24
Initialization/Restart.....25

**2.3 Resource Block .....25**
Each Device has Resource Block .....25
What is a Capabilities File?.....25
Resource block information.....25
Viewing Resource Block Data.....26
Basic Block.....26
Resource block parameters .....27

**2.4 Transducer Blocks.....27**
Purpose of Transducer Blocks .....27
Transducer Related Objects.....27
Standard Transducer Blocks .....27
Transducer block parameters.....28

**2.5 Function Blocks .....28**
Purpose of Function Blocks.....28
Custom (Basic) Function Block .....29

Standard FF Function Blocks ..... 29
Enhanced (Manufacturer-Specific) Blocks ..... 30
Simulation on Analog Input/Output Blocks ..... 30

**2.6 Analog Input Function Block ..... 30**
Analog Input Block Purpose ..... 30
Input Parameter Behavior ..... 31
Alarms ..... 31
AI block parameters ..... 31

**2.7 PID Function Block ..... 31**
PID Function Block Purpose ..... 31
PID Control Signals ..... 32
PID Function Block Schematic ..... 33
PID Parameter Behavior ..... 33
PID block parameters ..... 34

**2.8 Analog Output Function Block ..... 34**
Analog Output Block Behavior ..... 34
Analog Output Block Diagram ..... 34
Analog Output Block Schematic ..... 35
AO Parameter Behavior ..... 36
AO block parameters ..... 36

**3. OBJECTS IN USER APPLICATIONS ..... 37**

**3.1 Link Objects ..... 37**
Purpose of Link Objects ..... 37
Illustration of Linkages ..... 37
Fieldbus Message Specification ..... 38
Virtual Communication Relationships (VCR) ..... 38
Publisher-Subscriber ..... 39
Client-Server ..... 39

**3.2 View Objects ..... 39**
Role of View Objects ..... 39
View Data in Displays ..... 40

**3.3 Alarm and Alert Objects ..... 40**
What are Alerts? ..... 40
Purpose of the Alert object ..... 41
Alarms are alerts ..... 41
Blocks Supported ..... 41
Configure Alarms from TPS Builder ..... 41
Features and Features Sel ..... 44

**3.4 Additional Fieldbus Object Support ..... 46**
Trend Objects ..... 46

Domain Objects....46
Object Dictionary (OD)....46

**3.5 Device Descriptions (DD)....47**
DDs Standardize....47
TPS Builder Supplies Templates....47
Parameters in Views....47
Standard and Device-Specific DD....48
Access to Field Device DD....48
Standardized Descriptions and Interoperability....48

**4. ALARMS IN USER APPLICATIONS....49**

**4.1 Alert Acknowledgments....49**
Two Types of Alert Acknowledgments....49
Implicit Operator Acknowledgment....49
Analog Input Detail Example....50

**4.2 Alarm Priority Functionality....51**
Alarm functionality when enabled....51
Alarm priority....51
Mapping of FF Alert Priority to TPN Alarm Priority....51
Correlation of FF Alarm Priorities with TPS Network Alarm Priorities....51
Values on VIEW Block pages....51
Analog Input VIEW 4 Example....52

**4.3 Analog Input Alarm Parameter Mapping....53**
Mapping Analog Input Alarm Parameters....53
Fieldbus BLOCK_ERR as Slot Soft Failure....53
Mapping of PID Block Alarm Parameters....54
Example Fieldbus PID Detail Page....54
Time-Tagging....55

**4.4 Device and Link Alarms....56**
Block Alarms....56
Example Transducer Block VIEW Page with Block_Err....56

**4.5 Standard Process Alarms....57**
Device Generated Analog Alarms....57
Soft Failures....58
IOP Box Soft Failures....58
IOP Generated Slot Soft Failures....58
Device Generated Soft Failures....58
Example Display with Fieldbus Soft Failures....59

**4.6 Alarm Scenarios....60**
Example Alarm scenarios....60
Scenario A — Identification of a Failed Device....61

Scenario B — Device Control Alarm with Accept ..... 62
Scenario C — Device Control Alarm with Ignore ..... 63
Enabling and Disabling Alarms ..... 64
Real Time Journal Entries ..... 64

**4.7 Suppressing Alarms During a Device Failure ..... 66**
Effects of Inactivating PECM to Suppress Alarms from a Failed FBUS Device ..... 66

**5. DEVICE MANAGEMENT ..... 67**

**5.1 System Management ..... 67**
System Management VFD ..... 67
TPS Builder VFD Templates ..... 67
System Management Key Features ..... 67
System Application Clock Time Synchronization ..... 68

**5.2 Device Identification ..... 68**
Device ID, Tag Name and Device Address ..... 68
Device Address ..... 68
Tag Search Services ..... 69

**5.3 Scheduling a Control Strategy ..... 69**
Function Block Scheduling ..... 69
Link Active Schedule ..... 69
Link Schedule Creation ..... 70

**5.4 Example Schedule of Control Loop ..... 70**
Example Equipment View of Control Loop ..... 70
Example LAS Schedule of a Control Loop ..... 72
Execution Times for Loop 1 ..... 72
Execution Time ..... 73
Scheduling TPSN and FBCM Strategies ..... 73
Network Management ..... 73

**6. FIELDBUS IOP ..... 75**

**6.1 Personality and Point Types ..... 75**
Fieldbus IOP Personality ..... 75
HPM Fieldbus Point Types and Slot Numbers ..... 75
Software Slot Assignment ..... 75

**6.2 SECM Point Type ..... 76**
Segment Entity Control Module ..... 76
Example SECM Point Detail Display ..... 77
View SECM parameters on Device Detail ..... 78
Command SECM shutdown from Device Detail ..... 79
SECM Livelist Bitmap ..... 81

Example Livelist Interpretation ....81
Example Segment Status Display ....82

**6.3 PECM Point Type ....82**
Physical Entity Control Module....82
PECM Point Detail Displays ....83
Targets to PECM Pages....86
Example PECM Resource Block View ....86

**6.4 FBCM Point Type ....87**
Function Block Control Module ....87
FBCM Point Detail Display ....88
Block Pages (VIEW Pages)....89

**6.5 Parameter Mapping and Projection....90**
Access to Parameters ....90
Mapped Parameters....90
Projected Parameters ....91
Structured Parameters ....91
R610 Parametric Classifications ....91

**6.6 Peer-to-Peer Connections to Field Device Parameters....92**
Field Interconnections ....92
Control Interconnections ....92
Remote Out or Direct Digital Control....92
Consistent Control Relationship ....93
Control Connections through HPM....94

**6.7 Parameter Support in Displays....94**
Schematics....94
Fieldbus Additions to Conventional Displays....95
New Displays for Fieldbus....95
Calling Fieldbus Displays ....96
CL Restrictions....98
Group Display ....98
MetaData Based Detail Display....99
Detail Display ....100
VIEW Pages....102

**7. FIELDBUS CONTROL CONSIDERATIONS....111**

**7.1 HPM Control Loss ....111**
HPM Control Loss ....111
HPM Failure ....112
Fieldbus IOP Restart....113

**7.2 HPM Failover to Fieldbus Control ....113**
PID with External Reset Feedback....114

Use of Resource SHED parameters ..... 115
Block Mode Priorities ..... 115
Conditions for Actual Modes ..... 116
Back-calculation inputs ..... 116
Tracking enabled ..... 116
Fault State/Target Mode Change/Resource State ..... 116

**7.3 CL Access to Fieldbus Parameters ..... 116**
HPM/CL Access Restrictions ..... 116
AM/CL Access Restrictions ..... 117

**8. DISPLAYING HPM FIELDBUS POINTS ..... 119**

**8.1 Schematic Parameter Access ..... 119**
Accessibility defined in PRD ..... 119
Examples of Common Parameters ..... 119

**8.2 Group and Detail Display Behavior ..... 120**
Group Display Behavior ..... 120
Point Type Detail Displays ..... 121
Status Byte Indication ..... 122
Example Display with Status Indication ..... 123
PV status indicators ..... 124
Output status indicators ..... 124
Setpoint status indicators ..... 125
Fieldbus data types ..... 125
Detail display examples ..... 125

**8.3 Display Mode Handling ..... 129**
Mode Management ..... 129
Rotary and Switch Models ..... 130
Configuration Options ..... 130
Target Mode Examples ..... 131
Actual/Target Mode Indications ..... 132
CL and Schematic Access of MODE ..... 132
Alarm Handling ..... 132

**8.4 Status Displays ..... 132**
IOM Detail Display ..... 134
HPM/Fieldbus Checkpointing (Saving the Data) ..... 134
FB IOP Personality Upgrade ..... 135
Segment Status Display Pages ..... 137
Network Statistics Display ..... 140
Additional Information for Fieldbus Network and Maintenance Displays ..... 140
Event and Alarm Journalizing and Historizing ..... 141

**9. DISPLAY INDICATIONS OF FF STATUS BYTE ..... 143**

**9.1 Status Byte and Data Structure Overview ..... 143**
Status Byte Information ..... 143
Data Structures ..... 143
Interpreting the status byte ..... 144

**9.2 Group and Detail Display Indicators ..... 144**
Setpoint status indicators ..... 144
PV status indicators ..... 144
Output status indicators ..... 145
FF status byte indicators ..... 145
FF $FBSTATS enumeration ..... 145

# Figures

Manchester Biphase-L Encoding .....19
FBAP Block Diagram .....23
AI Function Block .....30
PID Function Block Diagram .....32
PID Function Block Schematic.....33
Analog Output Block Diagram.....34
Analog Output Block Schematic.....35
Link and Alert Objects in Fieldbus.....38
Analog Input Detail Page Showing TPN Alarm Parameters .....50
Analog Input VIEW 4 Page Showing FF Alarms.....53
PID Block VIEW Page 4 with Alarms .....54
Fieldbus PID Detail Page showing Alarm Parameters.....55
Transducer Block VIEW Page with Block_Err Noted.....57
Fieldbus Soft Failures .....59
IOP Slot Summary Showing Soft Failures .....60
Loop 1 Example .....71
LAS Scheduling for Loop 1 .....72
SECM Point Detail Display.....77
SECM Device Detail Page .....78
Command targets on SECM Device Detail Display .....79
SECM Device Detail CONFIG Page .....80
SECM Device Detail STATUS Page.....81
Segment Status Display Page 1 .....82
PECM Point Display, First Page .....83
PECM Device Detail First Page .....84
PECM Configuration Page .....85
PECM with Targets to View Resource Block Pages.....86
Resource Block — Operator Dynamic, Subpage 1.....87
Analog Input Point Detail Display.....88
First Page Menu for Views .....89
FB VIEW Analog Input Operator Dynamic Data .....90
Regulatory Control in HPM, AI, Backup PID and AO in Field.....93
Calling Tree Fieldbus Displays.....96
Calling Tree CM Point Detail Displays .....97
Example of Group Display .....99
Example of AI Point Detail Display.....100
Example of AI Point Detail with Menu.....101
PID Point Display with Modes Selected.....102

FB VIEW Operator Dynamic Data — PID Block Subpage 1 ..... 103
FB VIEW Operator Dynamic Data — PID Block Subpage 2 ..... 104
FB VIEW Operator Static —PID Block ..... 105
FB VIEW All Dynamic Data PID Block (Subpage 1) ..... 106
FBVIEW All Dynamic Data PID Block (Subpage 2) ..... 107
All Dynamic, Subpage 3 ..... 108
FB VIEW Other Static Data PID Block ..... 109
RB VIEW Operator Dynamic Data for AO Block ..... 110
Input in Fieldbus Device, Regulatory Control and Output in HPM ..... 112
RegCtl PID in HPM, AI, AO and Backup PID in Fieldbus..... 114
Group Display Including Fieldbus Points..... 120
PID Block View Page 1 Subpage 1 ..... 124
Fieldbus Network Status Display Calling Tree ..... 133
IO Module Display for a Fieldbus IOP ..... 134
HPM Status Display with Fieldbus IOP Personality Reload..... 136
IOP PI Loading Information Display ..... 137
Fieldbus Segment Status Display..... 138
Segment Status, Page 2..... 139
Fieldbus Network Statistics ..... 140

# 1. Fieldbus Communications Theory

## 1.1 Communication Layers

### FOUNDATION Fieldbus Overview

FOUNDATION Fieldbus communications technology consists of three layers:

- Physical layer
- Data Link Layer
- Application Layer

Additionally, there is a User Layer which is largely based on function blocks.

### Relationship to the OSI model

A subset of the ISO's OSI reference model is used to model these layers, as shown in the following figure. The physical layer is layer 1; the data link layer is layer 2; the Fieldbus Message Specification (FMS) is layer 7 (layers 3 through 6 are not used). Fieldbus does not use layers 3 through 6. FMS services, in combination with function block definitions, specify the functional interface for field devices, specify the message format, and the function block definitions define the data contained in the messages.

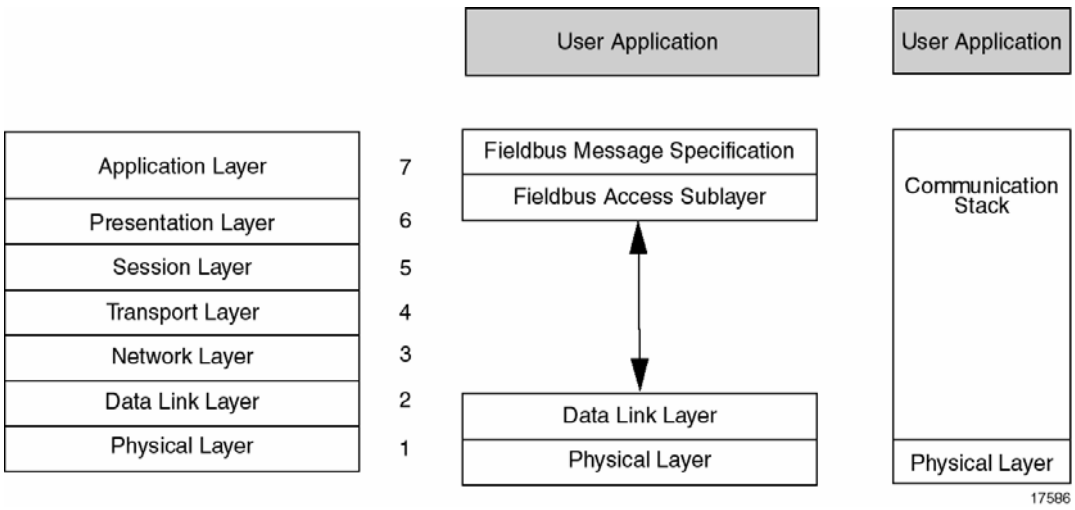

### Fieldbus Message Specification (FMS)

FMS allows different devices and the host system to communicate with each other across the fieldbus using FF formats. It describes the different services, formats and protocol needed to build messages for the User Application. The data that is communicated is based on an object-oriented model using object descriptions that are collected in the "object dictionary." FMS specifies the message format; function block "objects" in the object dictionary define the data the message contains. FMS controls the level of access for these messages and also records the access privilege of the users. The messages are transmitted over communication channels called communication relationships (see the VCR illustration in the following figure). Intercommunication between devices on the FB network is shown in the following figure.

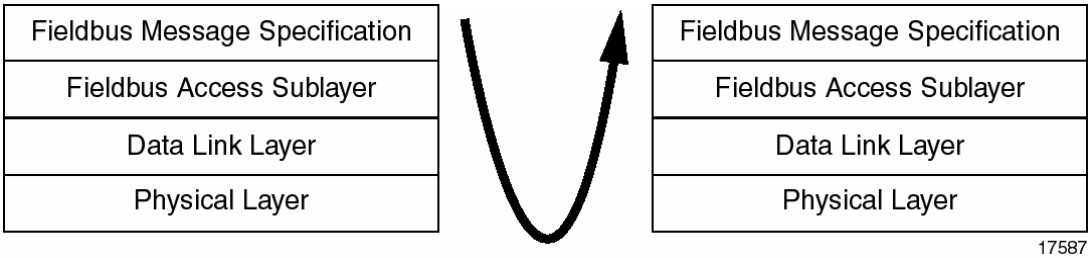


### Physical Layer

The physical layer is defined by approved standards from the IEC and the ISA. It receives the messages from the communications stack and converts them into signals for transmission. The Manchester Biphase-L technique is used for encoding signals. The signal is known as "synchronous serial" because clock information is embedded in the serial data stream.

The Manchester Biphase-L encoding technique is shown in the following figure.

**Manchester Biphase-L Encoding**

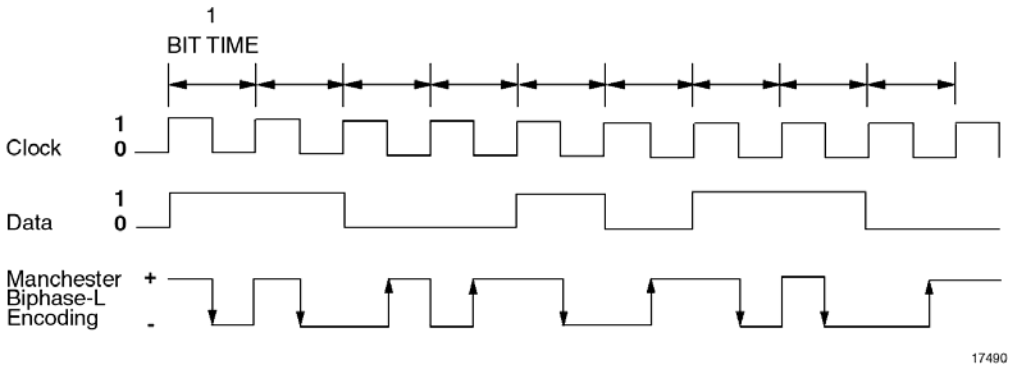


## Communications Stack

The communications stack shown in an earlier figure is composed of the Data Link Layer (DLL), Fieldbus Access Sublayer, and Fieldbus Message Specification. The Data Link Layer (2), transmits messages on the fieldbus through the Physical Layer (1). The DLL manages access to fieldbus through a “deterministic” centralized bus scheduler, the Link Active Scheduler (LAS). The LAS controls the exchange of data between devices and schedules transmission of deterministic messages. The DLL defines two types of devices:

- Basic Device
- Link Master

Each H1 has a device which is the Link Master and optionally one or more devices which are capable of assuming the role of backup to the Link Master. Under normal operating conditions the Fieldbus IOP serves as the master of the fieldbus segment. The backup Link Master is designated during configuration and it can be any device on the fieldbus that contains algorithms. A device such as the Honeywell ST3000, when configured as the backup Link Master, can assume this role.

**ATTENTION**

When the link master fails, the device with the lowest address that has the capability of being the link master will take over, even if a schedule has not been downloaded to this device. This must be taken into consideration when configuring the link.

If a schedule has been downloaded to the device with the lowest address on the link, this device will assume the role of link master.

The DLL, a subset of the emerging DLL standard, is documented *in FF-821 Data Link Layer Services Subset Specification* and *FF-822 Data Link Layer Protocol Subset Specification*.

## Scheduled Communication

Scheduled communication on a Fieldbus network is supported through the use of

- Link Master,
- Link Active Scheduler, and
- Compel Data message.

### *Link Master*

A Link Master is a class of device which can contain a Link Active Schedule. In the TPS system the Fieldbus IOP is configured as the Primary Link Master.

### *Link Active Scheduler*

The fieldbus network is designed for time-critical applications. For fieldbus synchronous control, data updates are pre-scheduled to occur at specified times under the control of a Link Active Scheduler (LAS). These updates are broadcast by the “publisher” device which is the source of the data, and are received by all “subscriber” devices. The data is accompanied by data quality and quality information. The field devices have a shared sense of time, which can be synchronized to within less than a millisecond (the smallest time unit granule is 1/32 of a millisecond on the fieldbus), to support device internal scheduling operation.

The LAS broadcasts a Time Distribution so that all devices on the data link have exactly the same link time. This facilitates the prompt scheduling of all LAS activities.

### *Compel Data (CD)*

The Compel Data function is a list of schedules by which *cyclic* activities occur. At the time scheduled, the LAS sends a CD message to a specific message buffer in a specific device; the device immediately publishes the data to all devices on the fieldbus. The CD is given highest priority by the LAS; other actions are performed between scheduled transfers.

## Unscheduled Communication

Unscheduled communication on a Fieldbus network is supported through the use of

- Token passing message,
- Link access delegation, and
- Live List maintenance.

### *Token Passing Message*

The LAS gives permission to devices to transmit messages on the network by issuing a Pass Token (PT) message to the device. When the device receives the token, it can transmit messages until it has finished or until its “hold time” expires, whichever is shorter.

### *Link Access Delegation*

All devices on the fieldbus network can send an “unscheduled” message through the Pass Token (PT) mechanism. The LAS supports unscheduled traffic by delegating link access in turn to each device. The scheduling and token delegation mechanism guarantees that scheduled data transfers will occur on time and that the first high priority message from a device will be sent within a specified time.

### *Live List Maintenance*

Devices that currently respond to the Pass Token (PT) are kept in a list known as the **Live List**. Periodically, the LAS issues a “probe node” to addresses which do not appear in the live list. If the device is present at the address, it issues a response and the LAS adds it to the live list. After completing the cycle of sending PTs to all devices in the list, the LAS issues a Probe Node to at least one address.

### Block Based User Application

The user application is based on FF “blocks.” Block types are:

- Resource blocks
- Function blocks, and
- Transducer blocks.

The resource block identifies the characteristics of the device etc.; the function block (FB), defines the system behavior, whether it is an input, output control (for example, AI, AO, PID etc.); transducer blocks contain information such as type of sensor, calibration date. Usually one transducer block is associated with each input or output function block.

### Communication between H1 Segments

In Fieldbus R610, communication between H1 segments must be made through HPM resident points, such as a Regulatory Control PID point.

# 2. Blocks in the User Applications

## 2.1 Function Block Application Process (FBAP)

### Function Block Application Process Elements

This section contains information about the User Application, also called the Function Block Application Process (FBAP). The “FBAP” or User Application uses resource blocks, transducer blocks, system and network management functions, and device descriptions. These elements are combined to perform I/O for automated monitoring and control, alarming, and communication within the fieldbus network and the TPS system.

### What is an FBAP?

The Function Block Application Process (FBAP) comprises a set of elementary functions that are modeled as “blocks.” These blocks provide a general structure for defining types of device functions, links, communication and transfer of data.

A block diagram shown in the following figure represents some of the key elements involved in the FBAP and their interaction.

**FBAP Block Diagram**

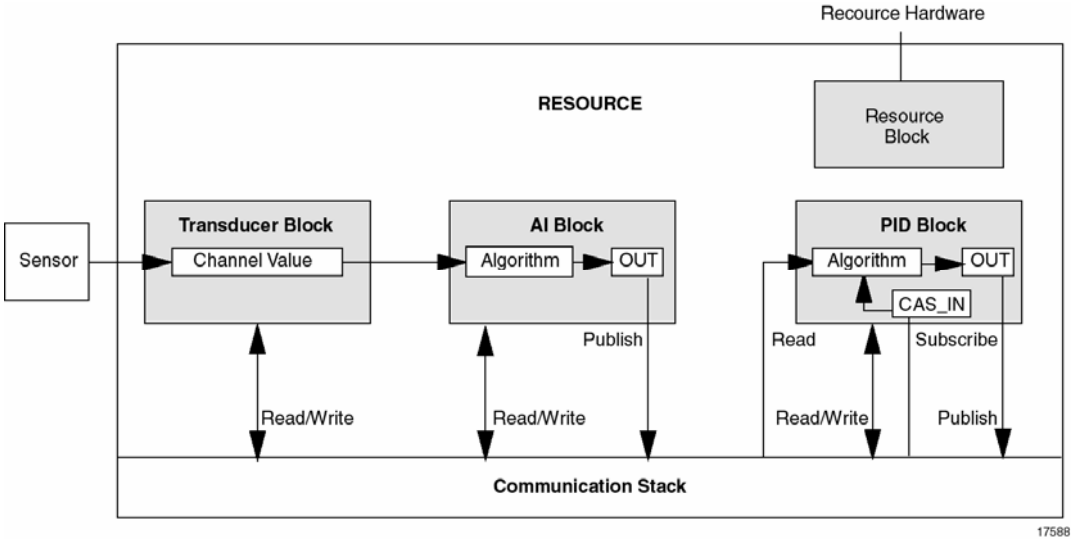

### Block parameters

**REFERENCE - INTERNAL**

For general information regarding the parameters associated with fieldbus user application function blocks, refer to User Application Function Block Reference, Block Parameter Summary in the *TPS Fieldbus Reference* document.

## 2.2 Block Descriptions

### FBAP Elements

FOUNDATION Fieldbus refers to the functions as “objects.” The key elements of the FBAP are device objects that are:

- Blocks objects and their parameters, which consist of the following block types:
  - Resource blocks
  - Transducer bocks
  - Function blocks (FB)
- Link objects
- Alert objects
- View objects

### Device Objects

The most frequent use of Link objects is to specify I/O parameter linkages between function blocks. All blocks may use a link object to specify an alert notify or trend report that is to be transmitted an alarming or reporting device. A brief description of these objects follows.

### Block Objects

Blocks are some of the key elements in the FBAP. Each fieldbus device has a resource block, one or more function blocks, and optionally a transducer block. The resource block, derived from the DDs and Capabilities File, represents the physical device. Function blocks provide the control behavior (for example, a PID controller, analog input, etc.) Transducer blocks represent an interface to sensors such as temperature, pressure, flow, and actuators that provide digital and analog output. These blocks are software units that represent functions, data, parameters, and connections for interoperability between blocks.

Configuration of the blocks is accomplished through a TPS Builder Project application, using a block strategy that represents the actual data in the devices. A subset of the new Control Module point type is used to represent these function blocks.

### Initialization/Restart

The process of initialization occurs to prepare a block for execution. FF notes two types of initialization; the first initialization occurs when the block is created. Memory blocks are cleared of their values and default data is written. The second type of initialization occurs for a restart after power is lost and subsequently restored.

## 2.3 Resource Block

### Each Device has Resource Block

Each FBAP within a device must have one resource block that describes the physical characteristics of the device. A device may have several FBAPs. The resource block contains FF standard parameters and alert reporting, and may contain manufacturer-specific block extensions, and manufacturer-specific alerts. The device manufacturer generally provides the default block information in a Capabilities File with the device.

### What is a Capabilities File?

The Capabilities File contains any parameters in the device, including the resource block, transducer blocks, function blocks and System Management data. TPS Builder uses the DDs and the Capabilities File to create TPS Builder templates. After configuration is complete, a Value File (a Value file is a text file that contains configuration data—parameter values—for a Fieldbus device. The Value file conforms to the specification as defined in the FF Specification - Common File Format Document FF-103) can be generated, which includes the Capabilities File information, plus the values assigned during the configuration process.

Instructions for creating this value file are in the *Fieldbus Implementation Guide*.

### Resource block information

Examples of information contained within the resource block are:

- Name of device.
- Manufacturer.
- Revision level.
- Alerts.
- Status information such as modes, O/S (out-of-service), Auto, and IMan.

- Control timers for high-level Remote Cascade and Output control.

Communication on the network is through the user application communication services, FMS and Data Link Layer.

### Viewing Resource Block Data

Resource block data can be viewed through targets on the CM point detail display (in the PECM) described later. Some of the visible data is read-only (parameters cannot be changed through targets on the display); others may be accessed, but caution should be exercised in changing resource block parameters. If a resource block is put out of service, all FBAPs associated with that resource block will also be put out of service and the function blocks will not execute.

The resource block has FF parameters and may have manufacturer-specific parameters. An example of manufacturer-specific parameters is shown in the following figure.

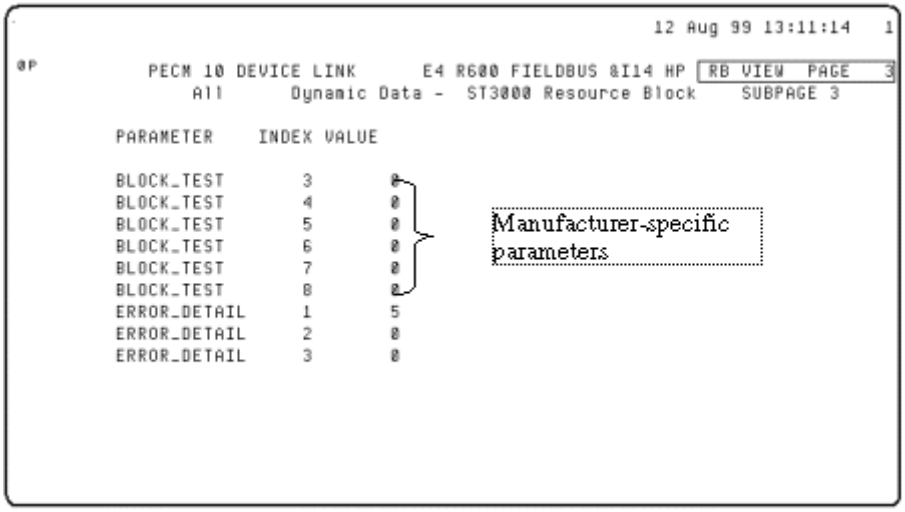


### Basic Block

TPS Builder provides templates for the basic block. All FF blocks must support the first six parameters and a block header. Manufacturers may create a “Custom Block” that contains the header, the first six parameters, and manufacturer-specific parameters as defined in the DD. TPS Builder supports this type of block.

### Resource block parameters

**REFERENCE - INTERNAL**

For information regarding the parameters associated with fieldbus user application resource function blocks, refer to User Application Function Block Reference, Resource Block Parameters in the *TPS Fieldbus Reference* document.

## 2.4 Transducer Blocks

### Purpose of Transducer Blocks

Transducer blocks de-couple (or insulate) function blocks from local I/O devices, such as sensors, actuators. Transducer blocks may be of three types: Fieldbus Foundation standard, Fieldbus Foundation Standard Enhanced, or (Custom) Manufacturer-specific. Manufacturer-specific blocks (or Custom blocks) can be derived from a standard block or a generic block. The TPS block library contains templates for standard and manufacturer-specific transducer blocks.

Each input/output function block is usually associated with at least one transducer block, which contains the functions to read the sensors, make calculations and issue commands to the (output) hardware. These blocks usually contain such information as calibration information and sensor type.

### Transducer Related Objects

Additional objects related to transducer blocks are defined in the user application:

- Link objects — the link object is normally used to pass alerts and alarms to a reporting device such as the FBIOP and to pass I/O data from one block to another or from one device to another device.
- Alert objects — support alarms and events on the fieldbus. Alarms are handled by TPS in the same manner as they would be if they were on any other process point.

### Standard Transducer Blocks

The first seven standard transducer blocks are listed in the following.

- Standard Pressure with Calibration Basic Access
- Standard Temperature with Calibration Basic Device Access
- Standard Radar Level with Calibration Basic Device Access

- Standard Flow with Calibration Basic Device Access
- Standard Basic Positioner Valve Basic Device Access
- Standard Advanced Positioner Valve Basic Device Access
- Standard Discrete Positioner Valve Basic Device Access

### Transducer block parameters

**REFERENCE - INTERNAL**

For information regarding the parameters associated with fieldbus users application transducer function blocks, refer to User Application Function Block Reference, Transducer Block Parameters in the *TPS Fieldbus Reference* document.

## 2.5 Function Blocks

### Purpose of Function Blocks

Function blocks describe the control system behavior and may be linked to other blocks; an FBAP can contain many function blocks. The function block inputs and outputs may be linked strategically to other blocks or to control algorithms resident in the HPM. Function blocks are actually software “objects” which connect to other entities in a *standard* manner.

Function blocks map variables into four views:

- View1 — operational dynamic information used for plant operation (example: PV variable, OP).
- View2 — static information may need to be read once and displayed with the dynamic data (example: SPHL).
- View3 — all dynamic data, updating and displayed in detail displays (SP, PV).
- View4 — static information, such as configuration or maintenance parameters (example: GAIN).

A Standard function block has an explicitly stated set of interface characteristics and behaviors defined by FF. TPS builder provides templates for function blocks:

- Standard FF function blocks
- Manufacturer-enhanced blocks

- Manufacturer's custom blocks.

### Custom (Basic) Function Block

The custom function block can be used as the basis for a resource, function, or transducer block; it contains a header and the first six required parameters.

### Standard FF Function Blocks

Standard function blocks supported by TPS Release 600 are listed in the following table.

| Block Class | Block Name | Symbol |
|---|---|---|
| Input | Analog Input | AI |
| Output | Analog Output | AO |
| Control | PID, PI, P Controller | PID |

These standard blocks have a set of FF parameters, and may have additional manufacturer-specific function block parameters. Function blocks have both Target and Actual modes of operation. The first six parameters in function blocks are identical no matter what the block class; they are common to all function blocks.

Process control blocks have the following elements:

- Inputs
- Outputs
- Scale
- Mode
- Visible data parameters (PV, SP, etc.)
- Volatile and static data values, saved from one evaluation to the next.

Control on the fieldbus segment must be able to be synchronized between the data sampling (AI), PID execution, and generation of the analog output. Synchronization is required for deterministic control performance. Synchronized control in the field device requires all devices within the control loop (that is, transmitter, valve, meter) to be resident on the same fieldbus segment.

### Enhanced (Manufacturer-Specific) Blocks

Manufacturers may supply their own enhanced version of a resource, function, or transducer block. It must have the FF headers and the required first six parameters, and it usually contains additional parameters supplied by the manufacturer.

### Simulation on Analog Input/Output Blocks

#### *Simulation Jumper*

To protect the user from casual use of simulation, a jumper must be properly positioned on the device. An alert from BLOCK_ERR is generated when simulation is active.

#### *Simulation on Blocks*

Simulation is a capability of FF that should be used cautiously. When simulation is enabled and active, a value and a status can be “faked” that look real on displays, trends, historians, etc. Input values can look good when they are indeed not real. End-elements can appear to be positioning when indeed they are not. That is intentional in order to be able to test reactions to various values and states of interest.

Since SIMULATE is neither published nor contained in any of the standard VIEWs, it is not easy to read for either direct Detail Display access or mapped access into TPS parameters. An HPM Logic point (where FBCM = Point Tagname), can be used to push to AI/AO FBCM.SIMVAL, if SIMENABL = ACTIVE and SIMSTAT = GOOD.

A user is able to place a “hand-held” device on the bus as a visitor and access the SIMULATE, SIMULATE_D and SIMULATE_P parameters.

## 2.6 Analog Input Function Block

### Analog Input Block Purpose

The purpose of input blocks is to access physical measurements through the input transducer block. The block processes the inputs and provides an output for linking to other blocks. Input blocks are composed of the contained parameters; process variable, and output parameters; additional input, output and manufacturer-specific parameters may be defined for the block. Connections are to downstream blocks only. The modes supported for Analog Input function blocks are O/S, MAN, and AUTO.

**AI Function Block**

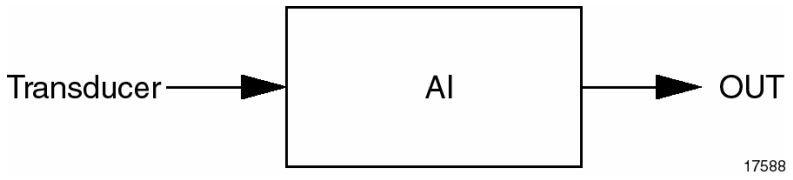


### Input Parameter Behavior

Scaling is applied to the input value. The XD_SCALE parameter is user-defined and must contain the same units code as the PRIMARY_VALUE_RANGE parameter of the transducer block. If they do not match, a block configuration alarm is generated and the block goes to O/S mode.

The parameter L_TYPE determines whether the equation is taken directly from the transducer block and passed to the AI block output (Direct) or converted into different units before it is passed to the AI block output (Indirect, or Ind Sqr root). PV_FTIME is applied to the PV. The PV and OUT values will be the same if the mode of the block is AUTO; if mode is MAN, a program may write to the output. The PV contains both a value and a status.

Writing to certain parameters is determined by the block's TARGET mode. Refer to the device manufacturer's documentation for mode restricted parameters to determine the parameters and mode restrictions.

### Alarms

Alarms are standard block alarms plus OUT alarms: HI_HI, HI, LO, and LO_LO.

### AI block parameters

**REFERENCE - INTERNAL**

For information regarding the parameters associated with fieldbus user application AI function blocks, refer to User Application Function Block Reference, Analog Input Block Parameters in the *TPS Fieldbus Reference* document.

## 2.7 PID Function Block

### PID Function Block Purpose

The PID block is universally used in control strategies because of its ability to integrate errors when they exist, and to move the output in the direction of the error. The PID

block may be cascaded to compensate for difference in process time of a primary and secondary measurement, if desired.

TPS R610 supports the PID Control block, which may be the primary control block or as a backup to a PID in the HPM. Output connections are to downstream blocks with back-calculation input parameters supported upstream. Manufacturer-specific and other parameters may be added. Modes of operation will depend upon the configuration, target mode and block inputs.

**PID Function Block Diagram**

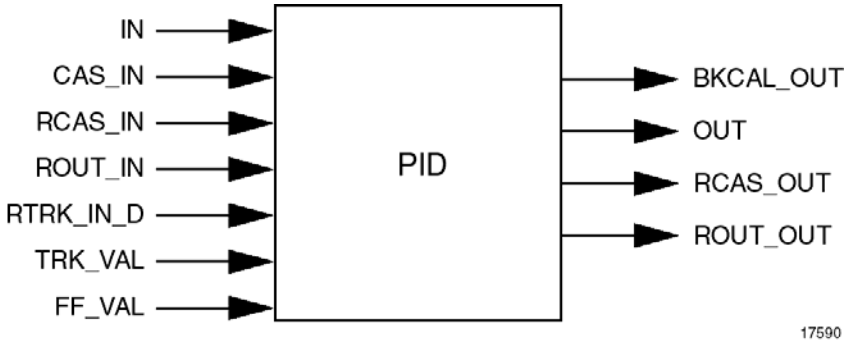


Some manufacturers supply an enhanced version of the PID function block in addition to the FF PID function block. The manufacturer's block may provide several equation types; however the input and output parameters remain the same as the FF block.

## PID Control Signals

The PID Control Function produces an output signal in response to a measured variable and a setpoint. The output has three terms, Proportional, Integral and Derivative. The output is adjusted by tuning constants as indicated in the following table.

| FF Parameter | TPS Parameter | Description |
|---|---|---|
| GAIN | FFGAIN | Tuning constant of the Proportional term. |
| RESET | FFRESET | The tuning constant of the Integral. |
| RATE | FFRATE | Tuning constant of the Derivative. RATE is frequently modified by a lag, which is set at some fixed ration higher than the rate. |

The variable to be controlled is connected to IN, filtered by the constant PV_FTIME, and shown as PV, then used with SP in the algorithm. The PID will not integrate if at the high/low limit and no change in the value is detected. PV has a status which is the same as IN, unless a PV or block alarm is detected.

The PID block has a configurable tracking option which will cause the SP to track the PV when the block is in actual mode of IMan, LO, Man or ROut. Limits will not cause this tracking.

### PID Function Block Schematic

Refer to the following figure for a schematic that shows PID parameter connections.

**PID Function Block Schematic**

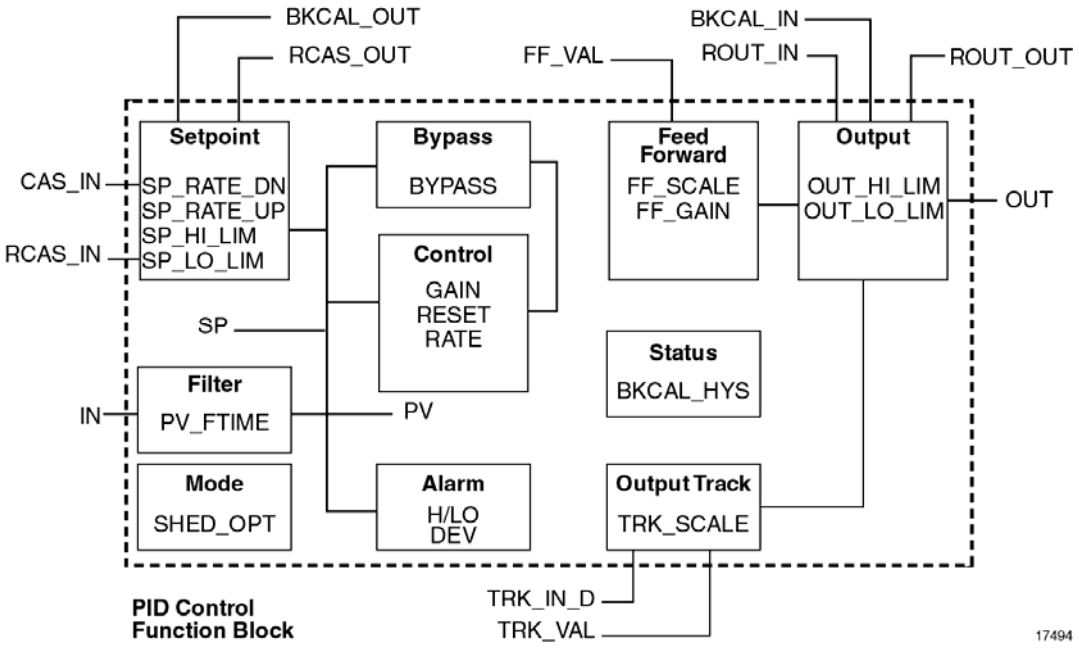


### PID Parameter Behavior

A bypass switch is configurable, and when enabled is available to the operator in Man or O/S modes. Bypasses are necessary because not all cascade control schemes will be stable. While the switch is set, the value of SP (% of range) is passed directly to the target output, and the value of OUT is used for the back-calculation out (BKCAL_OUT).

When the mode is changed to Cas, the upstream block initializes to the value of OUT. On transition from bypass, the upstream block initializes to the PV value, regardless of whether the PV for BKCAL_OUT option is set nor not. If the back-calculation option is not selected, the PID should have adjustments to prevent windup.

Output supports track and feed-forward algorithms. FF_VAL is brought in from some external source (proportional to disturbance in loop), converted to percent of OP span using FF_SCALE, multiplied by FF_GAIN and used to adjust the target of the OP. If FF_VAL status is bad, the last usable value is used. Upon return to a good value, the PID block adjusts to maintain the previous output.

Alarms supported are standard block alarms plus HI_HI, HI, DV_HI, DV_LO, LO, and LO_LO for PV.

Modes supported are O/S, IMan, LO, Man, Auto, Cas, RCas, and ROut. If a manufacturer-specific PID block is chosen, the user should refer to the manufacturer's mode specification.

### PID block parameters

**REFERENCE - INTERNAL**

For information regarding the parameters associated with fieldbus user application PID function blocks, refer to User Application Function Block Reference, *PID Function Block Parameters* in the *TPS Fieldbus Reference* document.

## 2.8 Analog Output Function Block

### Analog Output Block Behavior

The Analog Output (AO) block, while in cascade mode (Cas or RCas), receives the output (usually from a control block) into one of the cascade_in parameters, CAS_IN/RCAS_IN, and provides it to the Setpoint. PV_SCALE range is used to convert the SP to percent of Span. XD_SCALE is applied to convert percent of span to a number communicated to the channel where it is passed to the transducer block. The IO_OPTS *Increase to Close* is used to invert before this communication.

### Analog Output Block Diagram

**Analog Output Block Diagram**

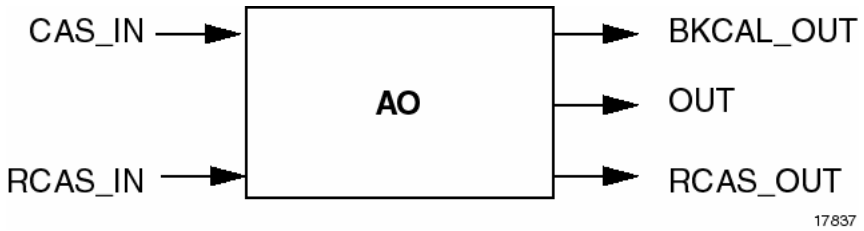


### Analog Output Block Schematic

Refer to the following figure for a schematic that shows AO parameter connections.

**Analog Output Block Schematic**

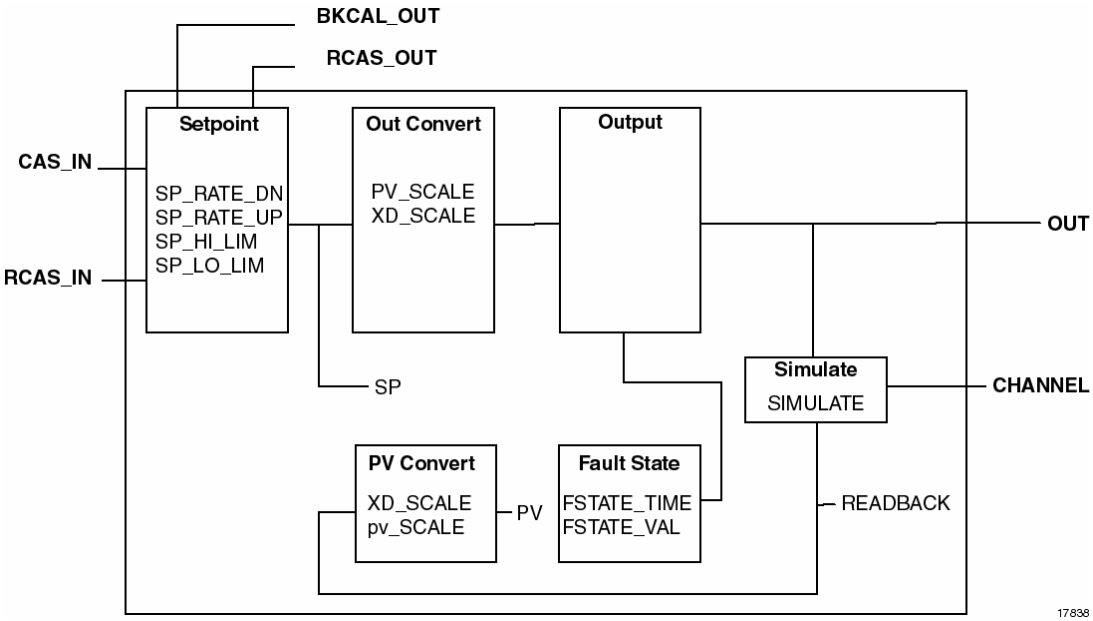

### AO Parameter Behavior

If the hardware (such as a valve positioner) supports readback, the XD_SCALE is applied to SP to become the PV for the block. IF readback is not supported, READBACK is generated from OUT.

The modes supported are O/S, LO, IMan, Man, Auto, Cas, and RCas. Manual adjustments can be made to OUT in Man mode, which requires that the manufacturer put limits on the transducer block. While Man mode may not be permitted, it is necessary for the transition out of O/S. IMan indicates the output is indisposable.

### AO block parameters

**REFERENCE - INTERNAL**

For information regarding the parameters associated with fieldbus user application AO function blocks, refer to User Application Function Block Reference, *Analog Output Function Block Parameters* in the *TPS Fieldbus Reference* document.

# 3. Objects in User Applications

## 3.1 Link Objects

### Purpose of Link Objects

Function blocks used to monitor and control a process are linked by “objects” within the devices. These link objects are the method by which data, status, and events (such as alarms) are shared along the fieldbus. These links are defined through link objects. Link objects identify the parameter or object to be linked, the Fieldbus Message Specification (FMS) used to transfer the data and the Virtual Communication Relationship (VCR) used in the transfer.

### Illustration of Linkages

The following figure describes the relationship of these linkages within the Function Block Application.

**Link and Alert Objects in Fieldbus**

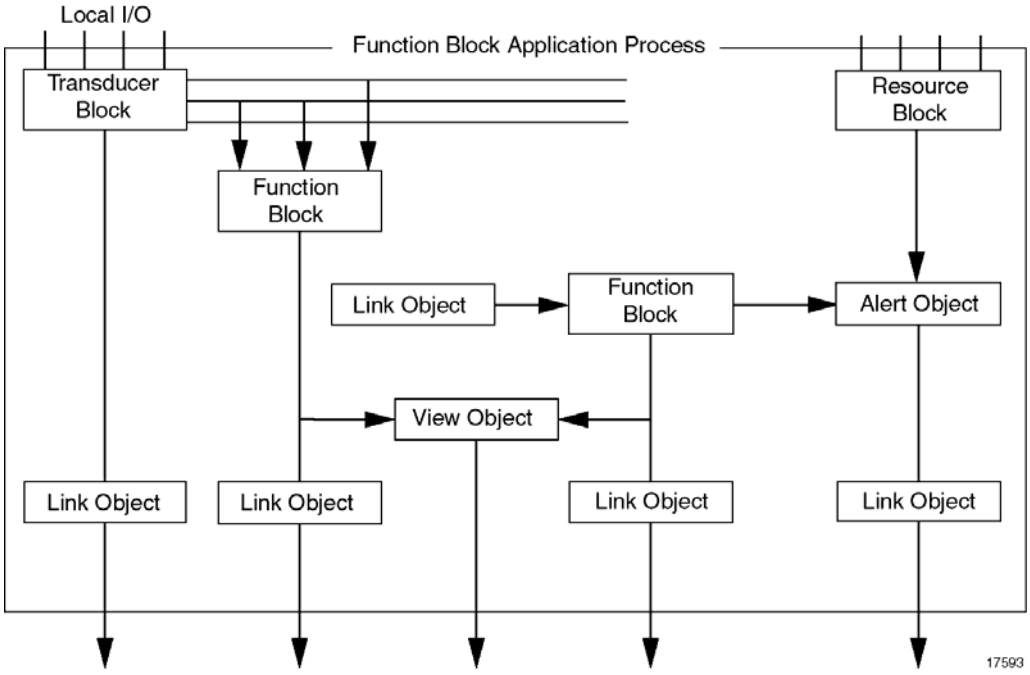


## Fieldbus Message Specification

User applications communicate over the fieldbus through the FMS services. The FMS describes the format and protocol behavior needed to build messages for the user application.

FMS uses objects which are descriptions within the User Layer (FBAP), such as function blocks, a resource block, an alert object, trend objects, parameters, display lists, etc., to communicate the data over the fieldbus. These object descriptions are collected and maintained for each VFD in the Object Dictionary (OD), which it shares with FMS. FMS uses information in the dictionary to encode and decode application data sent over the network.

## Virtual Communication Relationships (VCR)

To support the transfer of scheduled and unscheduled message information across the fieldbus network, Virtual Communication Relationships (VCRs) are used. Three types of VCRs are used by the FMS: Publisher/Subscriber, Client/Server, and Report Distribution.

### Publisher-Subscriber

The Publisher/Subscriber type VCR is used primarily by field devices for transfer of function block input/output data such as process variables and outputs. The Publisher/Subscriber type VCR is used for one-to-many *buffered* communications. ***Only the latest data remains in the buffer***. When a device receives the CD, it *publishes* the message to all devices on the fieldbus. Those devices which obtain the message are *subscribers*. The CD may originate in the LAS or it may originate from the subscriber. An attribute contained in the VCR determines the point of origin.

Because Publisher/Subscriber type VCRs are more efficient than Client/Server, it is the preferred VCRfor cyclic communications such as control interconnections.

### Client-Server

When a device on the fieldbus receives the token, it may send a request for a message from another device. The requestor is the *client*; the receiver is the *server*. The server responds when it receives the token. The Client/Server type VCR is used for such transfers as operator-initiated requests, for example setpoint changes, acknowledging alarms, uploading and downloading to devices.

Messages are queued, meaning that messages are sent and received in the order submitted ***without overwriting previous messages***.

Examples of Operator Messages Client/Server Type include:

- Setpoint changes
- Mode changes
- Tuning changes
- Upload/Download
- Alarm Management
- Access display views
- Remote diagnostics

## 3.2 View Objects

### Role of View Objects

View objects are defined for the resource block, transducer block, and function blocks. The variables in these blocks are mapped into “views.” Some parameters are visible in all four views for display purposes; others may be visible in only one or two views. These “views” are accessed through “Page ID” targets, **FBDATA**, **TBDATA**, and **RBDATA**. Within each of these targets up to four sets of data are available:

a) Operational dynamic information used for plant operation (PV variable, OP). In FF literature, this is known as View 1.

b) Static information may need to be read once and displayed with the dynamic data (example: SPHL), also known as View 2.

c) All dynamic data, updating and displayed in detail displays (SP, PV), FF's View 3.

d) Static information, such as configuration or maintenance parameters (GAIN), View 4.

### View Data in Displays

The tables for the block parameters in list the parameters for each block type and the Views, when applicable, for each parameter. A small sampling of views and data available in these views is shown in the following table.

| Parameter | Operating Dynamic | Operation Static | All Dynamic | Other Static |
|---|---|---|---|---|
| | ***View 1*** | ***View 2*** | ***View 3*** | ***View 4*** |
| SP | X | | X | |
| PV | X | | X | |
| SP HI LIMIT | | X | | |
| CAS IN | X | | X | |
| GAIN | | | | X |

## 3.3 Alarm and Alert Objects

### What are Alerts?

In FOUNDATION Fieldbus, events and alarms are known collectively as *alerts*. FF compliant devices must be able to generate device-related and process-related alarms and events. An "alert notifier" (within the resource) reports the detection of an alert condition. An "alert object" communicates this detection to other devices. In this manner, the interface device is relieved of the responsibility for polling the devices for alarming purposes. Transducer, resource and function blocks are relieved of the overhead of event processing which might interfere with their execution. The alert notifier examines results of block executions to determine if an alert condition has been entered. For **alarms**, entering and exiting a condition are defined as alert states. Upon detection, the alert object builds a message (also called an event notification) and publishes it on the network. If no response to the notification is received within a given time, the alert may be repeated.

### Purpose of the Alert object

Alert objects are used to generate alarms and report events; this is either an alarm, which has an accompanying return to normal, or an event which is simply the notification of an interesting condition (for example, device needs maintenance soon) for which there is no return to normal.

### Alarms are alerts

**Alarms** are considered alerts which must be acknowledged by an operator; events are alerts such as soft failures or events which may (or may not) return to normal without operator intervention or which have no return-to-normal condition (such as the placing of a device out of service). Some events are abnormal occurrences reported upward in the system until they reach the operator. These events do require operator acknowledgment.

### Blocks Supported

The alarms discussed in this section are limited to those blocks which are supported by R610, which include the Analog Input, Analog Output, and PID function blocks. As other blocks are released by the foundation, they will be added to this document. Transducer blocks as well as resource blocks may also generate alarms/alerts.

### Configure Alarms from TPS Builder

TPS Builder performs all initial FF alert configuration. In the device this is accomplished by downloading the configuration to the device. At point build time, the following should be configured in TPS Builder:

- In the device, the alarm limits - XXXX_LIM
- In the device, the alarm priorities - XXXX_PRI
- In the device, the alarm hysteresis – ALARM_HYS
- In the device, the alarm acknowledgment option – ACK_OPTION**
- In the device, the alert objects
- In the device, enabling of the alarms via the ALARM_SUM parameter
- The Resource Block Feature, and Feature Sel (refer to the following discussion).

**ATTENTION**

The ACK_OPTION (bitstring parameter) must be set to the value that enables auto acknowledgment for all alarms that are valid for the block being configured. See the *PM Family Parameter Reference Dictionary* for a definition of this bitstring.

Examples of TPS block configurations for the ACK_OPTION follow.

### *Example – ACK_Option configuration for an ST3000 AI block*

The ACK_Option configuration for an ST3000 AI block is shown in the following figure.

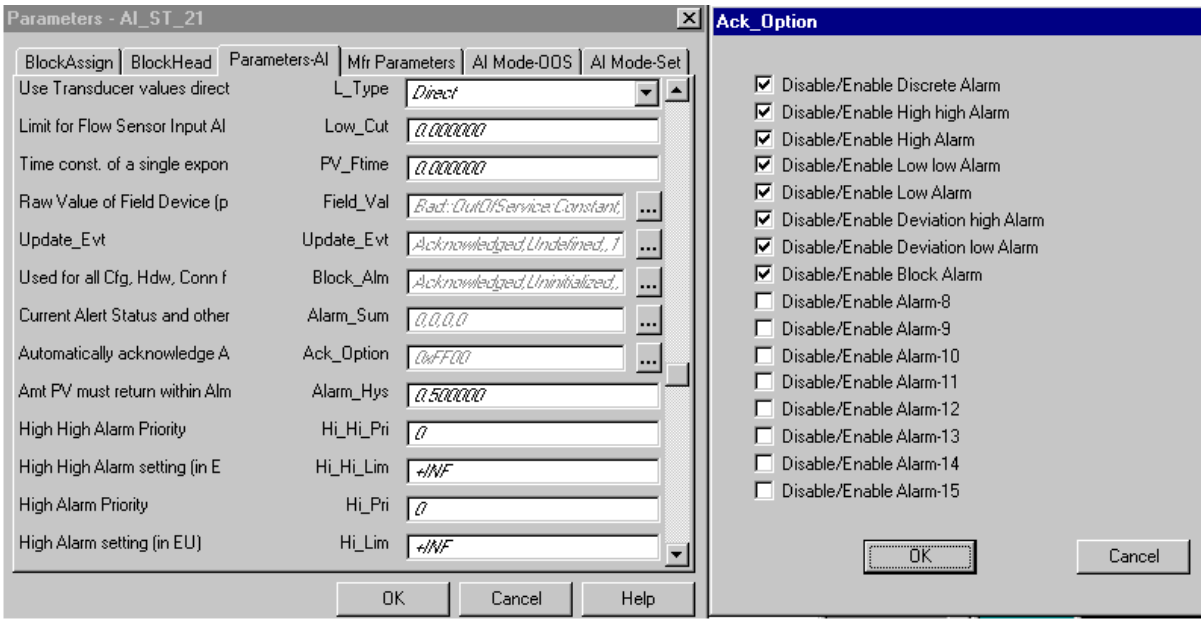

### *Example – ACK_Option configuration for an ST3000 PID block*

The ACK_OPT configuration for an ST3000 PID Block is shown in the following figure.

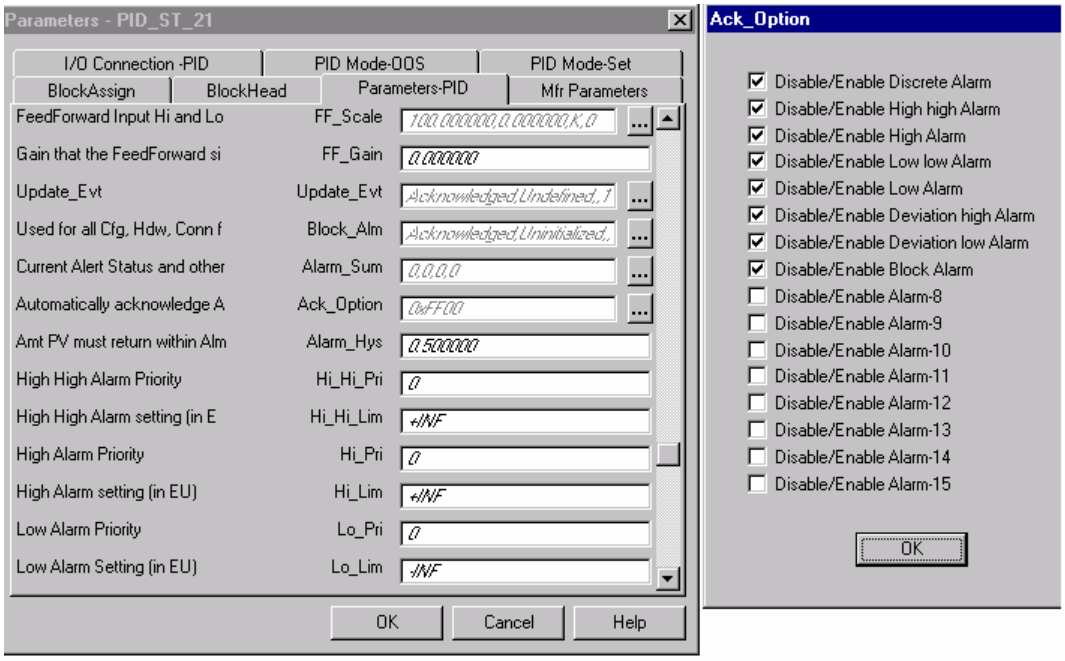

### *Example – ACK_Option configuration for an ST3000 resource block*

The ACK_OPT configuration for an ST3000 resource block is shown in the following figure.

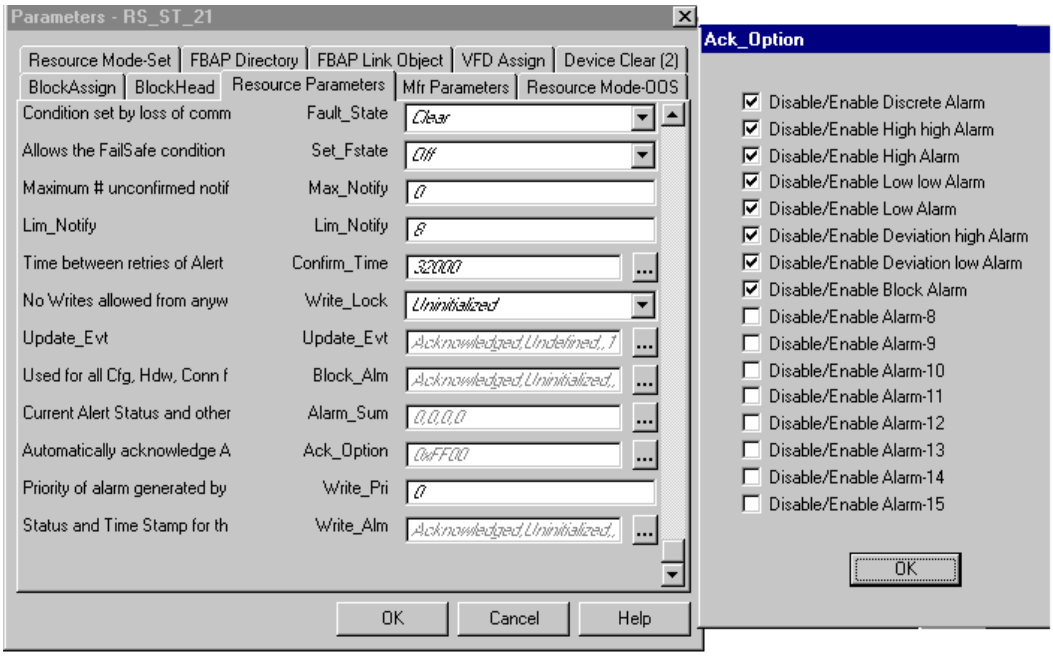


## Features and Features Sel

The manufacturer of a device has a select group of features that are part of the FOUNDATION Fieldbus specifications; the features provided are defined in the device descriptions. Identification of these features, and the user's options to choose from the provided features are configured in TPS Builder. These Features and the Feature_Sel are found in the Resource Block Parameters in the Link View of a project (position the cursor on the VFD, prefix VF, and select <*Parameters/Resource Block*>.

The following figure is an example of the features provided by a manufacturer. From the set of features provided, the user must select Reports (as shown in the following figure) in order to enable alarming for the block.

### *Example – Features provided by a fieldbus device manufacturer*

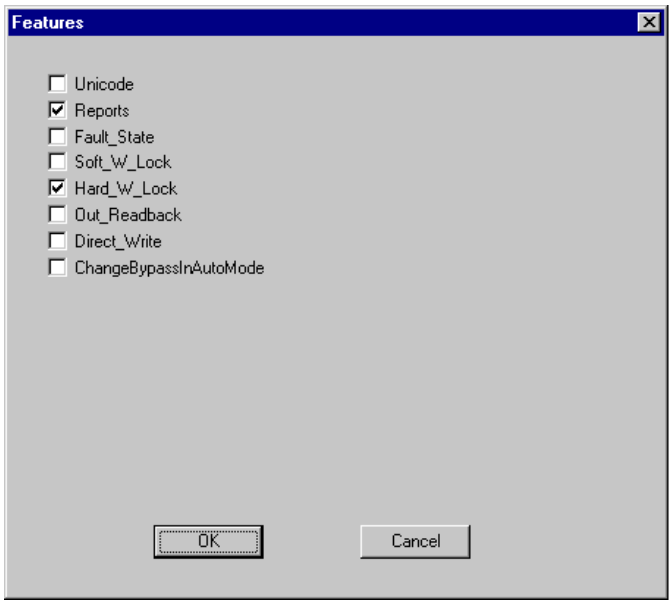


From the set of features provided by the manufacturer, select the desired features, including Reports, if you want to enable alarms/alerts.

***Example – Selecting features provided by a fieldbus device manufacturer***

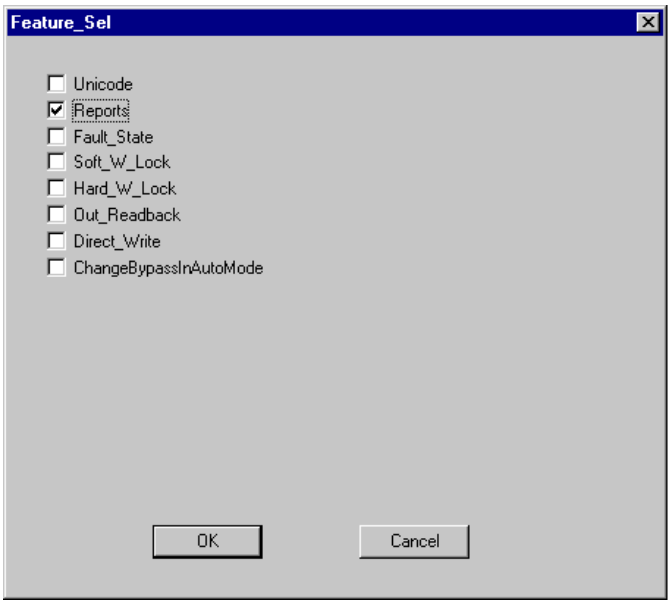


## 3.4 Additional Fieldbus Object Support

### Trend Objects

Field device trend reporting is not supported; however trends for fieldbus values are available in the same manners as other TPN process values by historizing the point and trending the point through the Native Window or Universal station trend functions

### Domain Objects

Domain objects are used to support the downloading of the Link Active Schedule to the Management section of a field device. TPS Builder uses the Fieldbus Message Service to read/write data to devices (for example, to load a link schedule to a backup device).

### Object Dictionary (OD)

Object dictionaries reside in the devices to verify the validity of requests to perform FMS services. This information is provided for the user's understanding of the Object Dictionary. Object Descriptions describe the data that is communicated across the fieldbus. This descriptions are collected and stored in the "object dictionary." Almost none of it is accessed directly by the user because TPS Builder provides the necessary

tools by which the source files are used to create IOP configuration parameters. It is not necessary to know every attribute in the FBAP OD. Most of the information about the FBAP OD is obtained from the Capabilities File and the Device Description Services. Device descriptions are discussed in the next section.

## 3.5 Device Descriptions (DD)

### DDs Standardize

Standardized definitions are used to support and describe application process objects. Two of these standardized "tools" used to describe these objects are the Object Dictionary (OD) and the Device Description (DD).

The Object Dictionary, Capabilities File, and the Device Descriptions define and describe the network visible objects of a device, such as function blocks and block parameters. These “tools” provide a consistency in understanding and describing these objects in device applications. The building and binding of these objects is made invisible to the user through the TPS Builder process. The Capabilities File is the source of device restrictions and capabilities and all object addresses. The Capabilities File provides parameters to configure the Management Information bases that exist in a device.

### TPS Builder Supplies Templates

TPS Builder supplies the templates for building the configurations in its various libraries. The user then configures and downloads the device within a project. Configuration and loading of resource and transducer blocks is also done within TPS Builder. Function blocks, and accompanying parameter configuration and tag building, is done through TPS Builder's control strategies. The strategies can then be forward-built and downloaded to individual devices. Forward Build creates an EB file for the selected entities. A new function, Load, is added to all TPSN strategies. The Load function automatically loads TPS Builder configuration data to TPSN, creating an EB file for selected entities and then using Command EC files and the EC Trigger to activate the load on TPSN.

### Parameters in Views

Parameter information is available to the users through the Views discussed previously in View Objects and in the discussion regarding the Detail Display in the Parameter Support in Displays section. Parameters used by engineering or operating personnel are mapped or projected to appropriate TPS parameters and made visible to the user through Point Detail, Group, Operating, and System Displays. Device Description Contents

A typical DD contains information about the block parameters and operation, such as:

- Attributes, such as data type and size, parameter description, display format, read-write capability, use (input, output, contained), parameter enumerations, parameter maximum/minimum values, storage capability (dynamic/not-dynamic).The parameter information is available to the user in the Views, discussed previously in View Objects and in the discussion regarding the Detail Display in the Parameter Support in Displays section. The Detail Display uses a subset of the DDs to display the View parameters. This subset of data is stored in the NIM and each UCN checkpoint directory, passed to the UCN/LCN/TPS Network, and is known by the name Metadata.

### Standard and Device-Specific DD

Standard DD descriptions for function blocks and transducer blocks are maintained by the Fieldbus Foundation. These descriptions can be used as part of a field device DD by manufacturers to describe the standard features of their devices. The Manufacturer uses the DDL (Device Description Language) to import the standard (DD) profiles into his DDL source code. These parameters are added in the DDL and the source is “tokenized” to create a binary file. The Tokenizer is a PC-based tool that converts DD source input files into DD output (binary) files that meet FF standards.

These two types of DDs (the standard and device-specific) can then be combined to provide a complete DD for the field device.

### Access to Field Device DD

The manufacturer supplies the DDs with the device in a binary file. The binary file may be of two types. A binary DD with the file name suffix *.FFO is a full DD. A binary DD with the filename suffix@.DDO is a partial or incremental DD. The incremental DD must be combined with the standard binary FF DDs through the use of a FF executable program called the Synthesizer. TPS Builder uses only the full DD. DDs that are registered with FF can be obtained from the Fieldbus Foundation on a quarterly updated basis. Some manufacturers may supply DDs with the device.

### Standardized Descriptions and Interoperability

The use of standardized descriptions and definitions to describe device application processes promotes the interoperability of fieldbus devices.

# 4. Alarms in User Applications

## 4.1 Alert Acknowledgments

### Two Types of Alert Acknowledgments

FF has two types of alert acknowledgments.

1. One could be referred to as communication acknowledgment between the devices. The FBIOP inherently supports this mechanism. If the FBIOP did not support this, then the fieldbus device would re-send the same alert a multiple number of times—thinking it had not been received by the FBIOP.
2. The second acknowledgement mechanism pertains to operator acknowledgments. If this were to be integrated in TPN, the Operator acknowledgment at the LCN would need to be propagated to the fieldbus device. The FBIOP does not support this. However, all of the usual TPN process alarms acknowledgments are supported.

### Implicit Operator Acknowledgment

However, FF provided a means of having this FF Operator acknowledgment implicitly occur when the communication acknowledgment occurs. This is accomplished by means of the ACK_OPTION parameter found in each fieldbus block (PID, AI, AO). The ACK_OPTION parameter is a bitstring type, where each bit represents a given alert type (HiHi PV, Hi PV etc.). If a given bit is set, when that alert occurs from the device's function block, that alert will be marked with automatic operator acknowledgement (by the device that was the source of the alert) when that device sees the communication acknowledgment from the FBIOP.

The TPS Builder default on any device block's ACK_OPTION parameter is setting of these bits (refer to the topic preceding this discussion).

Alarm handling for fieldbus process alarms is the same as for other TPN alarms, as they depend upon configuration parameters for their priorities.

**ATTENTION**

Alarms limits and priorities are initially set in the device configuration by TPS Builder. They can be modified later on the detail display of in the Data Entity Builder. Alarms shown on FIRST PAGE of the point detail display are shown in TPS terms.

## Analog Input Detail Example

The following figure shows an example Analog Input Detail page. Alarms shown on VIEW 4 pages are shown in FF terms.

**Analog Input Detail Page Showing TPN Alarm Parameters**

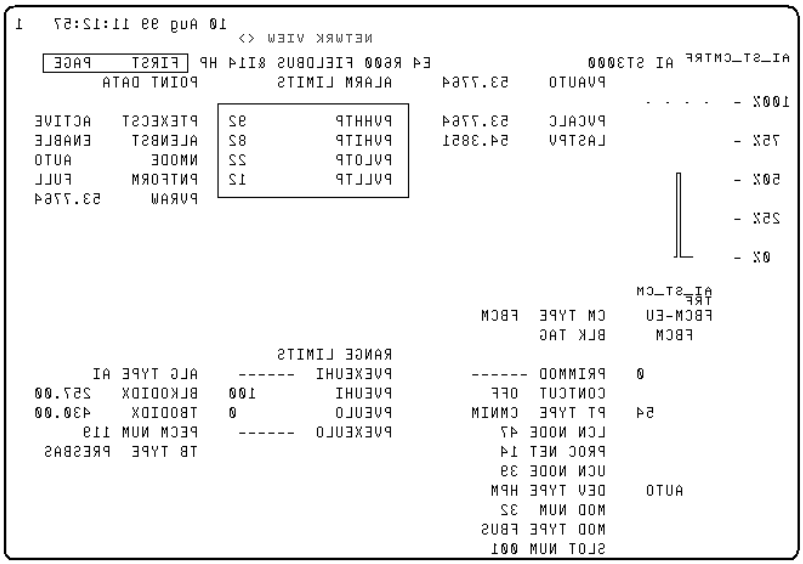


As stated earlier, the alarms are configured in TPS Builder. In configuring the alarms, use the Alarm tab in the Parameter Configuration form. Refer to the Configure Alarms from TPS Builder for example views.

When entering alarm priority as shown on VIEW page 4, use an integer as shown in column 1 of . Also, see the discussion under Alarm priority.

## 4.2 Alarm Priority Functionality

### Alarm functionality when enabled

FF events and alarms have been integrated into TPS, including the associated reporting, clearing, journaling and historizing of alarms and events where necessary. Process-related alarms have been mapped to their corresponding TPN parameters, as discussed in the following discussion.

### Alarm priority

**REFERENCE - INTERNAL**

For information regarding the functionality of alarm priority of fieldbus process alarms, refer to Alarms Reference, Alarm Priority, Alarm functionality in the *TPS Fieldbus Reference* document.

### Mapping of FF Alert Priority to TPN Alarm Priority

Since FF process alarms are the only alerts that generate TPN alarms, these are the only parameters that are considered: FF parameters that end in _PRI and TPN parameters that end in PRI. The following table mapping of the FF alert priority to the TPN ALPRIOR enumeration. The FF parameter HI_HI_PRI on the View 4 page contains a US8 in the range of 0 to 15 as shown in the far-left column. The NIM-resident TPN parameter (PVHHPR) that is synchronized to HI_HI_PRI contains the ALPRIOR equivalent enumeration from the far right column. A write to PVHHPR is done in terms of the ALPRIOR enumeration; the NIM then translates it to the highest FF alert priority in that range before writing the data to the device. In the far-left column this is the value in bold type. Since there is no way to set an FF alert priority to 0, 5, 6, 8, 9, 10, 12, 13, or 14 through the TPN parameter XXXXPR, these values can be set only through the Point Detail View 4 page.

### Correlation of FF Alarm Priorities with TPS Network Alarm Priorities

**REFERENCE - INTERNAL**

For information regarding the correlation of fieldbus and TPS of alarm priorities, refer to Alarms Reference, Alarm Priority in the *TPS Fieldbus Reference* document.

### Values on VIEW Block pages

Note that in changing the priorities on an FBCM block, VIEW page 4, as shown in the following figure, the integer value in the left column of previous table. must be used. The FF parameter HI_HI_PRI on the View 4 page shows a US8 in the range of 0 to 15 as

shown in the far-left column. The NIM-resident TPN parameter (PVHHPR) is synchronized to HI_HI_PRI and the ALPRIOR is the equivalent enumeration from the far right column. A write to PVHHPR is in terms of the ALPRIOR enumeration; and the NIM then translates it to the highest FF alert priority in that range before writing the data to the device. In the far-left column this is the value in bold type.

**ATTENTION**

Since there is no way to set an FF alert priority to 0, 5, 6, 8, 9, 10, 12, 13, or 14 through the TPN parameter XXXXPR, these values can be set only through the Point Detail View 4 page as shown in the following figure.

On the VIEW pages, there is no verification that a HI_HI_LIM is greater than a HI_LIM or a LO_LO_LIM (for an ST3000 Analog Input block) is lower than a LOW_LIM. We therefore recommend that changes to the Alarm Limits be made on the TPN Point Detail Page.

### Analog Input VIEW 4 Example

Alarm limits and priorities may be changed or from the VIEW pages. Note that on the view pages, an integer must be used if the priorities are changed. Refer to the previous table. Alarms may be enabled/disabled from VIEW Page 4, as shown when the Ack_Option target is selected.

**Analog Input VIEW 4 Page Showing FF Alarms**

```
                                                        10 Aug 99 13:23:37   1
                                              NETWRK VIEW <>
AI_ST_CMTRF  AI ST3000                  E4 R600 FIELDBUS &I14 HP  FB VIEW  PAGE   4
                 Other    Static  Data -  ST3000 AI Block          SUBPAGE 2

Ack_Opti  PARAMETER    INDEX VALUE

Disable/
Enable D  Ack_Option          Disable/Enable Discrete Alarm,
Disable/                      Disable/Enable High high Alarm,
Enable H                      Disable/Enable High Alarm,
Disable/                      Disable/Enable Low low Alarm,
Enable H                      Disable/Enable Low Alarm,
Disable/                      Disable/Enable Deviation high Al,
Enable L                      Disable/Enable Deviation low Ala,
Disable/                      Disable/Enable Block Alarm
Enable L
Disable/
Enable D
Disable/
Enable D  Alarm_Hys            0.50000
          Hi_Hi_Pri                15
Disable/  Hi_Hi_Lim            92.0000
Enable B  Hi_Pri                   12
          Hi_Lim               82.0000
**MORE**  Lo_Pri                   12
          Lo_Lim               22.0000
ENTER     Lo_Lo_Pri                15
          Lo_Lo_Lim            12.0000
```

## 4.3 Analog Input Alarm Parameter Mapping

### Mapping Analog Input Alarm Parameters

**REFERENCE - INTERNAL**

For information regarding the mapping of fieldbus AI alarm parameters to IOP and TPN parameters, refer to Alarms Reference, Alarm Parameter Mapping in the *TPS Fieldbus Reference* document.

### Fieldbus BLOCK_ERR as Slot Soft Failure

For Analog Input blocks, the fieldbus BLOCK_ERR parameter is reported to the TPN system as a Slot Soft Failure. A fieldbus alert object is mapped to one of the following:

- PVHHFL
- PVHIFL
- PVHIFL
- PVLLFL

### PID Block VIEW Page 4 with Alarms

```
                                                          10 Aug 99 14:36:41   1

PID_ST_CMTR PID ST3000                E4 R600 FIELDBUS &I14 HP [FB VIEW  PAGE   4]
F                Other    Static  Data -  ST3000 PID Block          SUBPAGE 3

          PARAMETER    INDEX VALUE

          Ack_Option         Disable/Enable Discrete Alarm,
                             Disable/Enable High high Alarm,
                             Disable/Enable High Alarm,
                             Disable/Enable Low low Alarm,
                             Disable/Enable Low Alarm,
                             Disable/Enable Deviation high Al,
                             Disable/Enable Deviation low Ala,
                             Disable/Enable Block Alarm


          Alarm_Hys           0.50000
          Hi_Hi_Pri               15
          Hi_Hi_Lim           92.0000
          Hi_Pri                  12
          Hi_Lim              82.0000
          Lo_Pri                  12
          Lo_Lim              22.0000
          Lo_Lo_Pri               15
          Lo_Lo_Lim           12.0000
```

**ATTENTION**

the values entered in the XX_PRI parameters on VIEW Page 4, Subpage3 must be the integers shown in the far-left column of the table showing.

## Mapping of PID Block Alarm Parameters

**REFERENCE - INTERNAL**

For information regarding the mapping of fieldbus PID alarm parameters to IOP and TPN parameters, refer to Alarms Reference, Alarm Parameter Mapping in the *TPS Fieldbus Reference* document.

## Example Fieldbus PID Detail Page

The alarm parameters shown on the detail first page are the TPN Parameters.

**Fieldbus PID Detail Page showing Alarm Parameters**

```
                                                        10 Aug 99 13:44:28   1
                                                 NETWRK VIEW <>
PID_ST_CMTR PID ST3000                  E4 R600 FIELDBUS 8I14 HP [FIRST    PAGE]
                    PVAUTO    ------        ALARM LIMITS          POINT DATA
100% -   . . . .
                                            PVHHTP          92   PTEXECST   ACTIVE
 75% -                                      PVHITP          82   ALENBST    ENABLE
                                            PVLOTP          22   NMODE        RCAS
 50% -                                      PVLLTP          12   PNTFORM      FULL
                                            DEVHITP       20.0
 25% -                                      DEVLOTP      -20.0
  0% -
            HP
        PID_ST_C
        MTRF
        FBCM_EU     CM TYPE  FBCM
        FBCM_KEY    BLK TAG
                                            RANGE LIMITS
SP            87    PRIMMOD ------          PVEUHI         100   ALG TYPE PID
                    CONTCUT  OFF            PVEULO           0   BLKODIDX   300.00
PV            91    PT TYPE  CMNIM          CVEUHI     100.000   TBODIDX    430.00
                    LCN NODE 47             CVEULO     0.00000   PECM NUM 119
OP%         87.2    PROC NET 14                                  TB TYPE  NOTCNFG
                    UCN NODE 39
            RCAS    DEV TYPE HPM
                    MOD NUM  32
                    MOD TYPE FBUS
                    SLOT NUM 004
```

**ATTENTION**

The deviation high and low trip points (DEVHITP and DEVLOTP) do not operate in fieldbus the same as they do in other TPN based points. In other TPN points, these values are entered as absolute values.

For fieldbus points, the DEVLOTP is a negative value as shown the previous figure. In the example shown above, the (DEVLOTP) alarm will trip when the PV deviates more than 20 points below the SP. Likewise, if the PV deviates more than 20 points above the SP, the (DEVHITP) alarm will trip.

## Time-Tagging

Alerts that are mapped to TPN soft failures and alarms are time-tagged by the HPM in the same way as other IOPs are timestamped. *Device* time tagging of alerts is not supported in R610 fieldbus.

## 4.4 Device and Link Alarms

### Block Alarms

Block alarms received by the fieldbus IOP are reported to the TPS Network as IO Module soft failures. Any block (function, resource, or transducer) can generate the block alarms listed in the following table Block errors are reported on the VIEW pages with which they are associated.

Resource block alerts are reported on the PECM as block errors, which are displayed as soft failures on block pages View 3.

**REFERENCE - INTERNAL**

For information regarding the device and link alarms, refer to Alarms Reference, Device and Link Alarms in the *TPS Fieldbus Reference* document.

### Example Transducer Block VIEW Page with Block_Err

Transducer blocks alarms are reported on the Transducer Block VIEW pages as Block_Err, as shown in the following figure.

**Transducer Block VIEW Page with Block_Err Noted**

```
                                                                  04 May 99 13:18:24   4

CV_701F     DESCRIPTOR                A1 APM 241                  TB VIEW  PAGE   1
                Operator Dynamic Data -  lx_xd_block                SUBPAGE 1

        PARAMETER    INDEX VALUE

        ST_Rev                   23
        Mode_Blk            TARGET    : Auto
                            ACTUAL    : OOS
                            PERMITTED: OOS, Auto
                            NORMAL    : Auto
        Block_Err           Other, OutOfService




        Transducer_T
        ype                      0
        XD_Error            None
        Final_Value          50.0000  CONSTANT
        Final_Positi
        on_Value             0.00000  # DEVICE FAILURE
```

## 4.5 Standard Process Alarms

### Device Generated Analog Alarms

An analog alarm occurs when a value meets or exceeds a limit. For a high alarm, an alarm occurs when the analog value is greater than or equal to the defined limit. For a low alarm, the directions are reversed. Deviation alarms may be defined where the value tested is the difference between two variables, such as the PV and a designated trip point. FOUNDATION Fieldbus alarms are mapped directly to TPN alarm parameters, as shown in the following table. The associated flags are also supported.

**REFERENCE - INTERNAL**

Refer to Alarms Reference, Standard Process Alarms in the *TPS Fieldbus Reference* document or information regarding the mapping of:

- PV alarms to TPN parameters and the associated flags, and
- alerts to TPN parameters

### Soft Failures

The Fieldbus IOP Box and Slot Soft Failures are reported on the Network (HPM) Status display on the FBIOP by a flashing red "SF" message. Soft (and Hard) Failure handling is detailed in the *High Performance Process Manager Service* manual.

### IOP Box Soft Failures

The mnemonic associated with the box soft failure is recorded in the Real Time Journal and the HM Event History. These events are time stamped by the HPM.

**REFERENCE - INTERNAL**

For a complete list of the IOP box soft failures, refer to Alarms Reference, *Standard Process Alarms* in the *TPS Fieldbus Reference* document.

### IOP Generated Slot Soft Failures

The mnemonic associated with a specific FBIOP slot soft failures and the time of the event are recorded in the Real Time Journal and the HM Event History.

**REFERENCE - INTERNAL**

For a complete list of the IOP box generated soft failures, refer to Alarms Reference, *Standard Process Alarms* in the *TPS Fieldbus Reference* document.

### Device Generated Soft Failures

Block Alarms received by the fieldbus IOP are reported to TPN as IOM Soft Failures. The first sixteen alarms shown in the following table can be generated by any block (function, resource, or transducer), while the last ten in this table are generated only by transducer blocks. The mnemonic associated with the failure and the time of the occurrence are recorded in the Real Time Journal.

**REFERENCE - INTERNAL**

For a complete list of the device generated soft failures, refer to Alarms Reference, *Standard Process Alarms* in the *TPS Fieldbus Reference* document.

### Example Display with Fieldbus Soft Failures

An example of a display with fieldbus soft failures is shown in the following figure.

**Fieldbus Soft Failures**

```
                                                    04 May 99 13:58:06   4


                        UCN 001   HPM 019   MODULE 007

                 1        2        3        4        5        Module Display
Select Page:                                                   Box Failures
                 6        7        8        9       10        Slots w/Failures

            80 *** Box soft failure only ***
            81 Segment Failure
            82 VFD Verification
            83 VFD Mismatch
            84 Device Missing
        ⇨   85 FF Block: Other Error
            86 FF Block: Block Configuration Error
            87 FF Block: Link Configuration Error
        ⇨   88 FF Block: Simulation Active
            89 FF Block: Local Overide
            90 FF Block: Device Fail Safe Set
            91 FF Block: Device Needs Maintenance Soon
            92 FF Block: Input Failure
            93 FF Block: Output Failure
            94 FF Block: Memory Failure
            95 FF Block: Lost Static Data

                 Slot Soft Failures - Page 6
```

Block Alarms can be enabled/disabled only in mass, not individually. A side effect of this method of handling is that the FF specification provides that only the first active block alarm will cause an “alarm occur” alert to be issued. Subsequent block alarms are detected and reported by the IOP by monitoring the parameter, BLOCK_ERR. Similarly, an “alarm clear” alert is issued only when the last active block alarm clears. Therefore, the IOP detects and reports all block alarm “clears” prior to the last one — again, by monitoring BLOCK_ERR. Since the FB-IOP processes these block alarms, no operator acknowledgment of the alarm is necessary.

The IOP Slot Summary also indicates the slots with soft failures as shown in the following figure. The "SF" beside the slot number is the indication.

**IOP Slot Summary Showing Soft Failures**

```
MAKE SELECTION                                          10 Aug 99 15:06:10   1
                                          NETWRK VIEW <>
                              IOP SLOT SUMMARY

    UCN 14  DEVICE  39  MODULE  32 - FBUS                          PAGE   1

STS SLOT POINT ID         CMTYPE      DESCRIPTOR           PTEXECST

SF     1 AI_ST_CMTRF      FBCM  AI ST3000
       2 PID_LX_CMTRF     FBCM  LX 1400
       3 AO_LX_CMTRF      FBCM  AO LX1400
       4 PID_ST_CMTRF     FBCM  PID ST3000
       5 RST3K1_AIF       FBCM  REAL ST3000 AI FBCM
       6
       7 RST3K1_PIDF      FBCM  PID IN REAL ST3000
       8
       9 BPIDF            FBCM  PID ST3K-B IOP32 LINK 2
SF    10 BAIF             FBCM  AI ST3K-B IOP32 LINK 2
SF    11 AAIF             FBCM  AI ST3K-A IOP32 LINK 2
      12 APIDF            FBCM  PID ST3K-A IOP32 LINK 2
      13 BLX_AOF          FBCM  AO LX1400  IOP32 LINK 2
      14 BLX_PIDF         FBCM  PID LX1400  IOP32 LINK 2
      15 ST72PIDF         FBCM  10DEV LINK
SF    16 ST72AIF          FBCM  10DEV LINK

  PAGE     SLOT                                          PM
 SELECT   SELECT                                       STATUS
```

Alarming functions such as $AUXUNIT and PRIMMOD are supported in R610 Fieldbus as they were previously.

## 4.6 Alarm Scenarios

### Example Alarm scenarios

The following alarm scenarios are described:

Scenario A — Identification of a Failed Device

Scenario B — Device Control Alarm with Accept

Scenario C — Device Control Alarm with Ignore

### Scenario A — Identification of a Failed Device

| Device Indication | | Operator Sees/Does | Recorded in HM, Real Time Journal |
|---|---|---|---|
| **1** | Everything OK. | Normal operation. | ---- |
| **2** | FF Block Alarm:<br>• Device Needs Maintenance Soon | Annunciator horn sounds. | System Status event FFDEVNMS against PECM slot. |
| | | Operator finds NIM \ HPM \ IOP soft failure and identifies fieldbus device needing action, then reports a medium priority service call to operations support. | |
| | | Operator ACKs flashing HPM Status Display and takes no more action. | ACK is journaled |
| **3** | Time passes (maybe days). | No more action on device. It keeps working. | |
| **4** | Device gets worse. | Annunciator horn sounds. | System Status event FFDEVNMN against PECM slot. |
| | FF Block Alarm:<br>• Device Needs Maintenance Now | Operator finds the NIM \ HPM \ IOP soft failure and identifies the fieldbus device needing action and then reports a new high priority service call to operations support. | |
| | | Operator ACKs flashing HPM Status Display. | ACK is journaled |
| **5** | More time passes. | No more action on device. It keeps working. | |
| **6** | Device Fails.<br>• It quits responding on the wire. | Annunciator horn sounds. | System Status events DEVNOTP against PECM and SECM slots. |
| | | Operator finds the NIM \ HPM \ IOP soft failure and identifies the failed fieldbus device action and then reports a new high priority service call to operations support. | |

| Device Indication | | Operator Sees/Does | Recorded in HM, Real Time Journal |
|---|---|---|---|
| | | Operator ACKs flashing HPM Status Display. | ACKs are journaled |

### Scenario B — Device Control Alarm with Accept

| Device Indication | | Operator Sees/Does | Recorded in HM, Real Time Journal |
|---|---|---|---|
| **1** | Everything OK. | Normal operation. OUTSTATE = NOVALVE. | ---- |
| **2** | FF Device Control Fail Alarm goes active:<br>• No Confirm, State 1 | Operator identifies FBCM point in alarm. | Process Alarm event FFDCFAIL (NCCLOSNG) for FBCM slot. |
| | | Operator ACKs flashing HPM Status Display | ACK is journaled |
| | | Operator determines state of controlled device is OK and decides to override the faulty switch. | Operator Process Change event for FBCM ACCEPT_D parameter. |
| | | Operator goes to View 3 page of FBCM point detail display and sets ACCEPT_D parameter to 1, State 1 confirmation failure will be cleared. Operator only sees parameter change momentarily as the function block clears it after it processes the transition to 1. | |
| **3** | FF Device Control Fail Alarm clears:<br>• No Confirm, State 1 | | Process Alarm FFDCFAIL (NCCLOSNG) RTN event for FBCM slot. |
| | | Operator ACKs flashing HPM Status Display. | ACK is journaled |

| Device Indication | | Operator Sees/Does | Recorded in HM, Real Time Journal |
|---|---|---|---|
| **4** | FF Device Control Accept Alarm goes active:<br>• Confirmed State 1 | Annunciator horn sounds. | System Status event CONF_ST1 for FBCM slot. |
| | | Operator ACKs flashing HPM Status Display. | ACK is journaled |

### Scenario C — Device Control Alarm with Ignore

| Device Indication | | Operator Sees/Does | Recorded in HM, Real Time Journal |
|---|---|---|---|
| **1** | Everything OK. | Normal operation. OUTSTATE = NOVALVE. | ---- |
| **2** | FF Device Control Fail Alarm goes active:<br>• No Confirm, State 1 | Annunciator horn sounds. | Process Alarm event FFDCFAIL (NCCLOSNG) for FBCM slot. |
| | | Operator identifies the FBCM point in alarm. | |
| | | Operator ACKs flashing HPM Status Display. | ACK is journaled |
| | | Operator determines that this function block has real problems. | Operator Process Change event for FBCM IGNORE parameter. |
| | | Operator goes to the View 3 page of the FBCM point detail display and sets bit 4 of the IGNORE parameter so that all State 1 confirmation failures will be ignored. | |
| **3** | FF Device Control Fail Alarm clears:<br>• No Confirm, State 1 | | Process Alarm FFDCFAIL (NCCLOSNG) RTN event for FBCM slot. |
| | | Operator ACKs flashing HPM Status Display. | ACK is journaled |
| **4** | FF Device Control Ignore Alarm goes | Annunciator horn sounds. | System Status event ST1_CONF for FBCM slot. |

| Device Indication | | Operator Sees/Does | Recorded in HM, Real Time Journal |
|---|---|---|---|
| | active:<br>• State 1 Confirm | Operator ACKs flashing HPM Status Display. | ACK is journaled |

## Enabling and Disabling Alarms

All process alarms except the IOP generated BADPV alarm can be enabled/disabled according to the access level configured for TPN alarms through:

- ALARM_SUM, XXX_PRI, or XXXX LIM on the VIEW data pages, or
- the TPN priority parameter XXXXXPR, or
- the TPN limit parameter XXXXTP.

FF block alarms cannot be individually enabled and disabled. They can be enabled and disabled only in mass through ALARM_SUM.

The BADPV alarm can be enabled/disabled independently only through the TPN parameter BADPVPR.

## Real Time Journal Entries

**Example Process Alarm Journal**

| | | | | | | | |
|---|---|---|---|---|---|---|---|
| ALM 00:15:00 | AI150101 | PVLO | 10.000 | HIGH | FIELDBUS AI 001 | 01 | 9.356 |
| ALM 00:16:00 | AI150102 | PVHI | 90.000 | HIGH | FIELDBUS AI 002 | 01 | 92.356 |
| ALM 00:17:00 | AI150103 | PVLL | 0.000 | HIGH | FIELDBUS AI 003 | 01 | - 1.356 |
| ALM 00:18:00 | AI150104 | PVHH | 100.000 | HIGH | FIELDBUS AI 004 | 01 | 101.356 |
| ALM 00:19:00 | PID150101 | DEVLO | 5.000 | HIGH | FIELDBUS PID 001 | 01 | 9.356 |
| ALM 00:20:00 | PID150102 | DEVHI | 5.000 | HIGH | FIELDBUS PID 002 | 01 | 9.356 |
| ALM 00:21:00 | DI150133 | FFDISC | | HIGH | FIELDBUS DI 001 | 01 | OPEN |
| ALM 00:22:00 | DA150134 | CHNGOFST | | HIGH | FIELDBUS DISC ALM 001 | 01 | |
| ALM 00:23:00 | DC150135 | FFDCFAIL | | HIGH | FIELDBUS DEV CTL 001 | 01 | NCCLOSNG |

**System Status Change Journal for Scenario A**

| | | | | | | | | | | | | | | |
|---|---|---|---|---|---|---|---|---|---|---|---|---|---|---|
| ALM 00:24:00 | NODE 21 | NIM | UCN | 10 ND | 15 LEFT | PARTFAIL IOM | FBUS | 0001 | SOFTFAIL | SOFTFAIL | FFDEVNMS | 113 | 74 |
| ACK 00:26:00 | NODE 21 | NIM | UCN | 10 | | | NODE | 0015 | PARTFAIL | | | | 79 |
| ALM 12:02:00 | NODE 21 | NIM | UCN | 10 ND | 15 LEFT | PARTFAIL IOM | FBUS | 0001 | SOFTFAIL | SOFTFAIL | FFDEVNMN | 113 | 74 |
| ACK 12:05:00 | NODE 21 | NIM | UCN | 10 | | | NODE | 0015 | PARTFAIL | | | | 79 |
| ALM 16:24:00 | NODE 21 | NIM | UCN | 10 ND | 15 LEFT | PARTFAIL IOM | FBUS | 0001 | SOFTFAIL | SOFTFAIL | DEVNOTP | 113 | 74 |
| ALM 16:25:00 | NODE 21 | NIM | UCN | 10 ND | 15 LEFT | PARTFAIL IOM | FBUS | 0001 | SOFTFAIL | SOFTFAIL | DEVNOTP | 120 | 74 |
| ACK 16:27:00 | NODE 21 | NIM | UCN | 10 | | | NODE | 0015 | PARTFAIL | | | | 79 |

**Composite Journal for Scenario B**

```
ALM 00:23:00     DC150135          FFDCFAIL                HIGH     VALVE NUMBER 26          01      NCCLOSNG
ACK 00:23:15     DC150135          FFDCFAIL                HIGH     VALVE NUMBER 26          01
    00:30:00     DC150135  VALVE NUMBER 26           ACCEPT_D      0            1             01    5
RTN 00:30:15     DC150135          FFDCFAIL                HIGH     VALVE NUMBER 26          01      NONE
ACK 00:30:30     DC150135          FFDCFAIL                HIGH     VALVE NUMBER 26          01
ALM 00:31:00  NODE 21  NIM        UCN  10 ND  15 LEFT     PARTFAIL IOM     FBUS      0001  SOFTFAIL  SOFTFAIL     CONF_ST1    35   74
ACK 00:31:15  NODE 21  NIM        UCN  10                                  NODE      0015        PARTFAIL                          79
```

**Composite Journal for Scenario C**

```
ALM 00:23:00     DC150135          FFDCFAIL                HIGH     VALVE NUMBER 26          01      NCCLOSNG
ACK 00:23:15     DC150135          FFDCFAIL                HIGH     VALVE NUMBER 26          01
    00:30:00     DC150135  VALVE NUMBER 26           IGNORE        0            16            01    5
RTN 00:30:15     DC150135          FFDCFAIL                HIGH     VALVE NUMBER 26          01      NONE
ACK 00:30:30     DC150135          FFDCFAIL                HIGH     VALVE NUMBER 26          01
ALM 00:31:00  NODE 21  NIM        UCN  10 ND  15 LEFT     PARTFAIL IOM     FBUS      0001  SOFTFAIL  SOFTFAIL     ST1_CONF    35   74
ACK 00:31:15  NODE 21  NIM        UCN  10                                  NODE      0015        PARTFAIL                          79
```

# 4.7 Suppressing Alarms During a Device Failure

### Effects of Inactivating PECM to Suppress Alarms from a Failed FBUS Device

The following table describes the effects on the system when a PECM is inactivated in a failed FBUS device.

| System Function | Effects |
|---|---|
| Existing Process Alarms | FBIOP does not generate return-to-normal events for the process alarms generated by the function blocks in the respective failed FBUS device. User must also make the respective FBCMs in the failed device inactive to clear out the process alarms from the Alarm Summary Displays<br><br>If the associated PECMs in the failed FBUS device are made inactive and then made active again (with the FBCMs remaining active), no process alarms are recovered from the failed device. The process alarms that previously were generated from the function blocks in the failed device remain as they were previously journaled and displayed. |
| Existing System Soft Failures | FBIOP generates return-to-normal events for the soft failures existing in the PECM and the respective FBCMs. The return-to-normal events are logged in the system journals.<br><br>If the PECM is made active while the FBUS device is still in a failed condition, the Device Missing soft failure is generated for the respective PECM, and is logged in the system journals. Block errors cannot be obtained from the failed device. |
| BADPV Indication | PVs from the function blocks of a failed FBUS device remain in a BADPV condition when the corresponding PECM is inactivated.<br><br>If the PECM is made active while the FBUS device is still in a failed condition, the BADPV indication for the PVs from the function blocks remains the same. |
| TPS Builder Download | Downloading to an FBUS device is always permitted when the device's PECM is inactive.<br><br>If the FBUS device has previously failed or fails during a download, then the download to the function blocks will not be successful. |

# 5. Device Management

## 5.1 System Management

### System Management VFD

A System Management VFD represents a fieldbus device within the physical device and is an interoperable network view of a device application and its communication with another device or the TPS system. Each VFD specifies the communications characteristics of its device application and the FMS services used to access it.

All of the configuration information needed by System Management is contained in a VFD, such as scheduling, access to the System Management Information Base (SMIB) and to the Network Management Information Base (NMIB). NMIB data contains variables, statistics, Virtual Communication Relationships (VCR), Link Masters Configurations, and Link Active Schedules, *if the device is a Link Master*. SMIB data includes tag identification and address and function block execution times and other timers. The VFD specifies the communications characteristics of its device application and the Fieldbus Message Specification (FMS) services used to access it.

### TPS Builder VFD Templates

TPS Builder has a library which contains templates for manufacturer's VFDs. The generic templates (VFD1) cannot be enhanced by adding parameters. The values in VFD1 will change depending on the default values obtained from the manufacturer's Capabilities File. The standard template (VFD2) can be added to, if a manufacturer has added parameters to the resource block. The standard device VFD1 and VFD2 form the bases of all manufacturer devices.

### System Management Key Features

System Management (SM) operates on special objects in the System Management Information Base (SMIB) which is part of the Management Virtual Field Device (VFD).The key features of system management operation:

- Provide system application clock time synchronization.
- Provide scheduling of function blocks.
- Provides Physical Tag and Address assignment of the device to the link.
- Provides a device identify service.
- Provides a find tag service.

The information needed by System Management is described by object descriptions in the System Management VFD, described in the previous section. This VFD provides access to the System Management Information Base and the Network Management Information Base.

### System Application Clock Time Synchronization

Each link in a fieldbus network contains an Application Clock Time Publisher responsible for distributing Application Time on the link.

A clock synchronization message is periodically sent by the time publisher to all fieldbus devices. The application clock time is independently maintained in each device based on its own internal crystal clock.

Clock synchronization provides the capability for devices to time stamp data (events and alarms when they occur). Synchronization to LCN time is not supported in R610.

## 5.2 Device Identification

### Device ID, Tag Name and Device Address

Each fieldbus device on the network is uniquely identified by:

- Device ID which is set by the manufacturer to uniquely identify the device.
- Device Name (Tag) — set by the user to identify operation.
- Device Address —a unique numerical address on the fieldbus segment (link). Address may be set automatically by system management, under Device Matching Direction from TPS Builder.

### Device Address

The Management VFD contains the information base, which includes the System and Network Management parameters, three of which are: DEV_ID, PD_TAG, and DEVICE ADDRESS. This is encapsulated in the SECM. Each device configured on a given link will have parameter entries associated with it in the SECM configuration data.

If a device is configured on a given link and if it appears on the Live List when the IOP is running, the IOP will attempt to match the configured device data with data read from the device by comparing the unique DEV_ID for a given device. If the device does not match the, the status will to OFFNET; otherwise it attempts to compare the PD_TAG and DEVICE ADDRESS, if these have already been assigned in the device, and the device status will go to MISMATCH if either one does not match the configuration data.

If the PD_TAG and/or DEVICE ADDRESS have not been assigned in the device, the IOP will assign them accordingly.

### Tag Search Services

Before tag building is complete, TPS Builder searches to make certain the tag identifier is not currently in use.

## 5.3 Scheduling a Control Strategy

### Function Block Scheduling

The SMIB contains a schedule, called the function block schedule, that indicates the time that the device's function blocks are to execute.

System Management schedules the start of each function block relative to the execution period of the device. The execution period represents one complete cycle of the function block schedule in a device. The macrocycles of all devices on the link are synchronized so that function block executions and their corresponding data transfers are synchronized in time. The macrocycle of the link identifies the completion of all the separate loop execution periods.

### Link Active Schedule

Using the TPS Builder configuration software, the device's function block schedule can be pre-configured.

Control loops are configured on a link. A control loop consists of one to several function blocks that run in a designated order for a specified loop duration period. The schedules within a loop are assigned a sub-schedule. TPS Builder will group connected blocks within the same period into the same sub-schedule. A user may make changes to the graphic representation of the schedule and save the revised schedule. At this time, additional controls are created to represent sub-schedules, sequences, and elements included in the schedule. When the schedule is first generated, TPS Builder assumes the execution of the blocks to be from the input to the final output, but the engineer may change the order during scheduling.

If parts of a loop are to run at different duration, the loop duration may be set for each block in the loop.

Each schedule has an absolute start time which is known to all devices on the fieldbus. The Link Schedule has a Schedule Summary that contains the macrocycle duration of the Link Schedule. A macrocycle is a single iteration of a schedule within the device. A complete discussion of the method of calculating the schedule for execution of the function blocks can be found in TPS Fieldbus Implementation.

### Link Schedule Creation

A Link Active Schedule defines the exact time at which published parameters of function blocks are scheduled. A fieldbus link may have a number of link schedules. When a link strategy is created within a project, a single LAS is created for the link; however additional LASs may be created for the link. All LAS scheduled are initially empty. The LAS control has a build method which invokes the creation of the schedule. Before this schedule can be created, the “soft” links created when the control drawing was made must be translated into true connections. This is achieved in TPS Builder; the process creates the real connections and the Link Object and VCR objects.

If this is the first time the schedule has been accessed, TPS Builder generates a recommended schedule based on the connections and their block assignment. This schedule is in graphic format. See the *Fieldbus Implementation Guide* for further information.

## 5.4 Example Schedule of Control Loop

The following two figures show examples of a control loop and the LAS Schedule for the loop, respectively. The Execution Times for Loop 1 table shows the sub-schedule for the block parameters.

### Example Equipment View of Control Loop

The following figure shows a control loop from TPS Builder’s Equipment View.

## Loop 1 Example

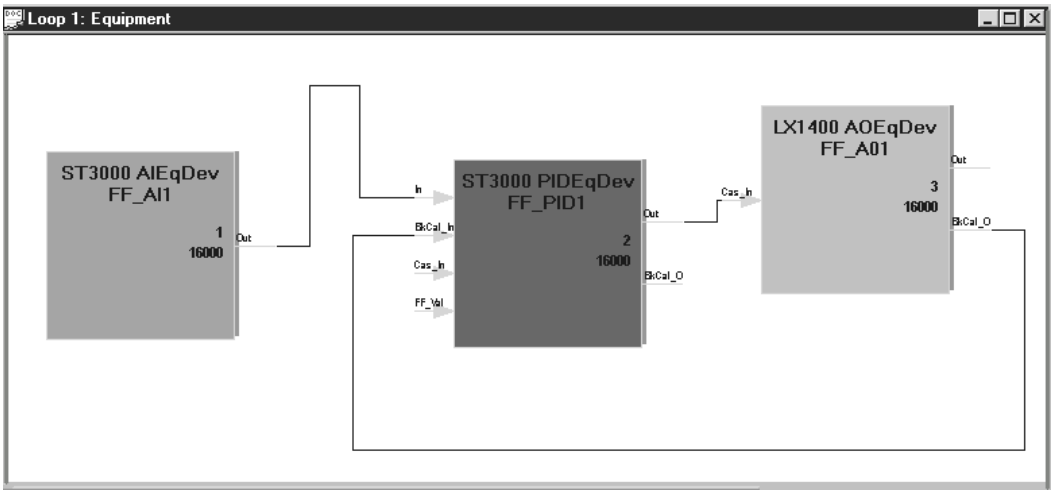

## Example LAS Schedule of a Control Loop

The following figure shows a control loop schedule from TPS Builder.

**LAS Scheduling for Loop 1**

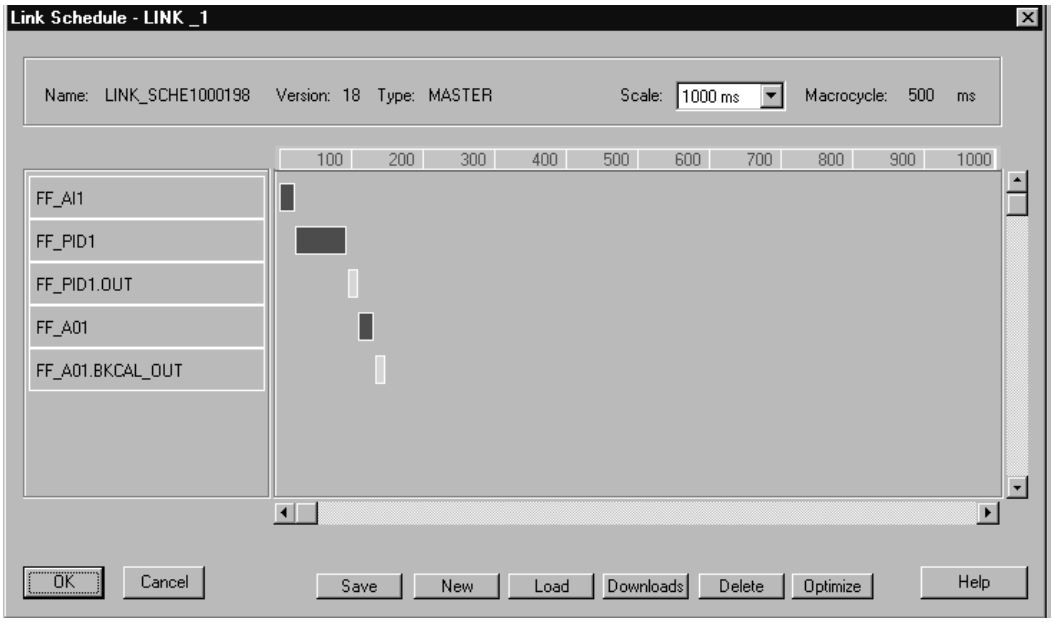


## Execution Times for Loop 1

The following table shows execution times for the previous control loop example.

| Parameter<br>Loop 1 Macrocycle | Execution_Time | |
|---|---|---|
| | **Clock Units<br>16000** | **Milliseconds<br>500** |
| FF_AI1 | 736 | 736 |
| FF_PID1 | 2336 | 2336 |
| FF_PID1.OUT publish | 480 | 480 |
| FF_AO1 | 736 | 736 |
| FF_AO1.OUT publish | 480 | 480 |

### Execution Time

Each block has an execution start time. The execution period of one function block is defined by the vendor in the Device Description Files. Its execution time within a control loop should not overlap the execution period of another block. After the block has executed, a gap time allows the first block time to publish its output parameters. The gap time is a constant, but may be changed by the engineer.

### Scheduling TPSN and FBCM Strategies

When a TPSN control strategy is included in a loop, TPS Builder is not able to schedule the TPSN control strategy, neither when it runs nor when it passes the output to a FBCM strategy. To provide the best possibly that the strategies will be synchronized, TPS Builder schedules inputs as early as possible in the loop duration and outputs as late as possible.

### Network Management

Network management is completely invisible to the user because the IOP interface and TPS Builder take care of all the network management functions.

# 6. Fieldbus IOP

## 6.1 Personality and Point Types

### Fieldbus IOP Personality

The Fieldbus IOP is unique in that it comes from the factory with a loaded personality, and it must be reloaded from time-to-time as new function blocks are released by FOUNDATION Fieldbus and software is updated.

A reload of the personality is accomplished through the HPM Status Display, as shown later in the discussion regarding Status Displays.

### HPM Fieldbus Point Types and Slot Numbers

The TPS system interfaces with the FOUNDATION Fieldbus system through a special IOP in the HPM. This IOP card can reside in any slot not used by the HPMM (two cards). The IOP functions as a “router” for the TPS Builder configuration functions. This routing is generally invisible to the user and is known to the TPS as the Blind Record Data Pipe, because the networks over which the data and messages are transferred do not understand the messages; they merely transfer them.

To complete the software interface, a new TPS point type, the Control Module point type was developed. It has three sub-types: the Segment Entity Control Module (SECM), the Physical Entity Control Module (PECM), and Function Block Control Module (FBCM). These point types serve as agents for the H1 segment, field device, and function/transducer blocks respectively. The template for the CM point (SECM, PECM and FBCM variants) is present in the LCN/UCN library. This template is present whether the fieldbus subsystem is present or not.

All physical fieldbus entities are mapped to corresponding TPN CM strategies. A fieldbus Link is mapped to a SECM, a fieldbus device to a PECM and each fieldbus function block to a FBCM. Fieldbus transducer blocks can share the same FBCM as their related function blocks. CM Mapping is performed for a selected Link, after the required CM strategies are created. They are assigned to the relevant FBIOP for the Link.

All point building is done within the TPS Builder project concept as described in the *Fieldbus Implementation Guide*.

### Software Slot Assignment

For each fieldbus IOP, 128 software slots are available. Slot 0 is reserved as the box slot, having parameters which pertain to the operation of the IOP itself.

**REFERENCE - INTERNAL**

For a list of the slot use conventions, refer to Fieldbus IOP, Software Slot Assignments in the *TPS Fieldbus Reference* document.

## 6.2 SECM Point Type

### Segment Entity Control Module

Each Segment Entity Control Module (SECM, pronounced “sec’em”) represents a fieldbus network on one of the four H1 segments of the IOP. Network operational characteristics such as the active LAS are encapsulated by the SECM, as is the actual segment population and segment parameter configuration (that is, it indicates the device addresses present on the segment and the device type — IOP, Field Device, Visitor, Default_Address — of the connected devices).

A fieldbus link is associated with a fieldbus IOP by using the TPS Builder Parameter Configuration Form. The Network Number, Node Number and Module Number identify the IOP, the Link Number, range 1 – 4, identifies which of the four SECM positions is used in the IOP. The SECM also has a CONFIG page, which is the next page of the device detail display.

Note: For the SECM display, the devices that have had their PECM configured, the PD_TAG and status of the device also will be available.

### Example SECM Point Detail Display

The following figure displays a SECM Point Detail Display.

**SECM Point Detail Display**

```
                                                    10 Aug 99 10:54:03   1
                                          NETWRK VIEW <>
I32LINK4S   SECM POINT DESCRIPTOR    E4 R600 FIELDBUS &I14 HP [FIRST    PAGE]

        - - - -    CM TYPE  SECM
                   DEV ID   48574C0001-HWL-IOPLNK-0000000004          [DEVICE
                   PD TAG   FBUS IOP LINK 4                            DETAIL]
                   BLK TAG


        I32LINK4
        S

        SECM_KEY
                                                        POINT DATA
                                                        PTEXECST   ACTIVE
                                                        ALENBST    ENABLE
                   PT TYPE  CMNIM       DEV ADDR 020    ASSOCDSP
                   LCN NODE 47          SEGMENT  004    $AUXUNIT       --
                   PROC NET 14
                   UCN NODE 39
                   DEV TYPE HPM
                   MOD NUM  32
                   MOD TYPE FBUS
```

### View SECM parameters on Device Detail

A SECM has no group display; parameters are visible on the device detail display. The parameter, PTEXECST, can be changed from the detail display. The target, **DEVICE DETAIL**, on the display is used to invoke the fieldbus Device Detail display for the point. $AUXUNIT has no effect on this display.

More detailed information is provided in the *Process Operations* manual.

**SECM Device Detail Page**

```
                                                    09 Aug 99 17:41:29   1

I32LINK4S         SECM POINT DESCRIPTOR     E4  R600 FIELDBUS 8I14 HPM39
                                                                 [FIRST PAGE]
PRILNKMS      PRIMARY LINK MASTER ON                               [REFRESH]
 [TRUE]       PD TAG   FBUS IOP LINK 4                 SEGMENT STAT  BAD CONN
[FALSE]                                               PTEXECST      ACTIVE
              PT TYPE  SECM                           COMMAND       NONE



 FB NETWORK     4
 SEGMENT       01
 SEG NAME    I32LINK4S
 DEV ADDR      20

 PHY DEV MODEL SERIAL NR    48574C0001-HWL-IOPLNK-000000004
 MANUFACTURER DEV MODEL NR  R600 FBUS IOP
 MANUFACTURER NAME          HONEYWELL
 REVISION NUMBER            REV 0.00

 LINK I/F ERRORS

[ENTER]

        [UCN  14]  [IOM   32]  [Fbus Seg]  [Fbus Net]                [Block]
        [HPM  39]   SLOT 123   [ Status ]  [Statistics]             [Detail]
        FTWABS69.06
```

### Command SECM shutdown from Device Detail

The SHUTDOWN (to shut down the segment) can be commanded from the Device Detail display, by selecting the **COMMAND** target, as shown in the following figure. The commands are shown on the left-hand side of the page.

**Command targets on SECM Device Detail Display**

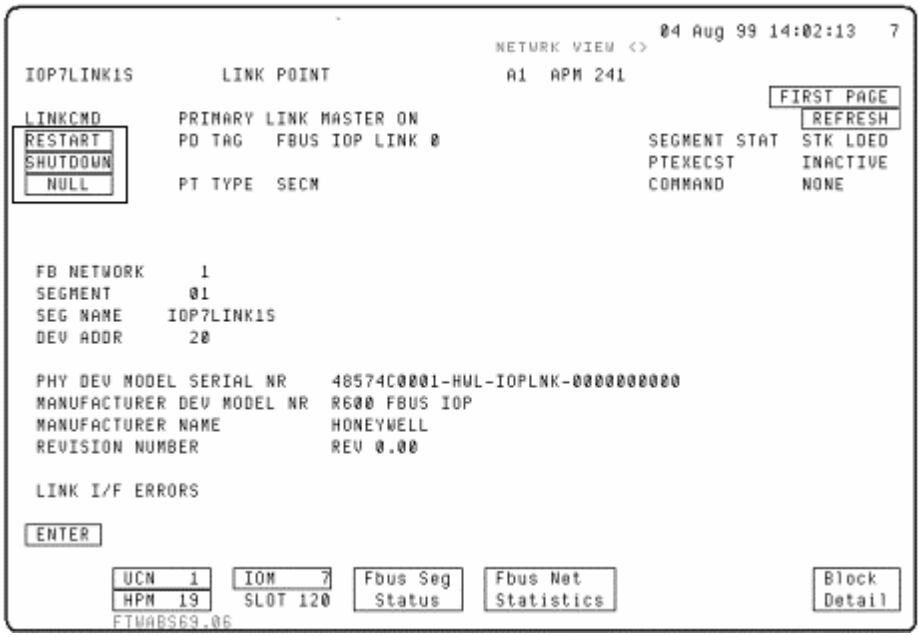

### SECM Device Detail CONFIG Page

```
                                                    09 Aug 99 17:39:16   1

I32LINK4S         SECM POINT DESCRIPTOR     E4  R600 FIELDBUS &I14 HPM39
                                                                CONFIG PAGE
                                                                   REFRESH



              FBAP VFD TAG NAME    IOP FBAP VFD
              FBAP VFD REF NUMBER       2.0



        UCN  14   IOM   32   Fbus Seg   Fbus Net                  Block
        HPM  39   SLOT 123    Status   Statistics                Detail
```

## SECM Livelist Bitmap

The SECM Status Page contains the livelist bitmap, which directly corresponds to the Fieldbus Segment Status.

**SECM Device Detail STATUS Page**

```
                                                    09 Aug 99 17:36:45   1

I32LINK4S         SECM POINT DESCRIPTOR     E4  R600 FIELDBUS &I14 HPM39
                                                                STATUS PAGE
                                                                   REFRESH
              ACTIVE SCHEDULE VERSION    39.0      DEACTIVATE
              NUMBER OF SCHEDULES          1
              SCHEDULE 1 VERSION         39.0      ACTIVATE

 LIVELIST BITMAP
 0000 0FDE 0000 0000 0000 0000 0000 0000 0000 0000 0000 0000 0000 0000 0000 0000

        UCN  14   IOM   32   Fbus Seg   Fbus Net                    Block
        HPM  39   SLOT 123    Status    Statistics                  Detail
```

## Example Livelist Interpretation

The SECM Status Page livelist bitmap directly corresponds to the Fieldbus Segment Status. In this illustration, the livelist decodes as shown in the following table.

| **Hex** | **0** | | | | **F** | | | | **D** | | | | **E** | | | |
|---|---|---|---|---|---|---|---|---|---|---|---|---|---|---|---|---|
| Decimal | 0 | | | | 15 | | | | 13 | | | | 14 | | | |
| Bitstring | 0 | 0 | 0 | 0 | 1 | 1 | 1 | 1 | 1 | 1 | 0 | 1 | 1 | 1 | 1 | 0 |
| Corresponding Address | | | | | 20 | 21 | 22 | 23 | 24 | 25 | 26 | 27 | 28 | 29 | 30 | 31 |

The livelist bitmap shows a zero at address 26, which indicates the device at address 26 is not responding, as shown in the Segment Status display, in the following figure. The Segment Status Display is discussed in more detail in Status Displays.

### Example Segment Status Display

The device at address 26 is OFFNET.

**Segment Status Display Page 1**

```
                                                    09 Aug 99 17:43:51   1

SEGMENT: I32LINK4S         SECM POINT DESCRIPTOR     OK          [REFRESH]
                                                                [PAGE  1]
| 01  DEV ADDR   22         DEV OK | 02  DEV ADDR   26         OFFNET
| 5                                | 0
| 48574C0002-HWL-ST3000-DEFCBA9000 | 48574C0002-HWL-ST3000-DEF8447000
| 03  DEV ADDR   29         DEV OK | 04  DEV ADDR   28         DEV OK
| ALX                              | LX82
| 464C530201-VAL-LX1400-00DEF661D0 | 464C530201-VAL-LX1400-00DEF78C10
| 05  DEV ADDR   24         DEV OK | 06  DEV ADDR   30         DEV OK
| ST75                             | ST74
| 48574C0002-HWL-ST3000-DEFF2BF000 | 48574C0002-HWL-ST3000-DEFF04E000
| 07  DEV ADDR   21         DEV OK | 08  DEV ADDR   23         DEV OK
| LX71                             | ST71
| 464C530201-VAL-LX1400-00DEFBB710 | 48574C0002-HWL-ST3000-DEFB805000
| 09  DEV ADDR   25         DEV OK | 10  DEV ADDR   27         DEV OK
| ST72                             | ST73
| 48574C0002-HWL-ST3000-DEFBF9D000 | 48574C0002-HWL-ST3000-DEF89E7000
|                                  |
|                                  |

[UCN  14]  [IOM  32]                [Prev Seg]  [Next Seg]  [Fbus Net Statistics]  [Device Detail]
[HPM  39]  FTWABS60.06
                                                                          17767
```

## 6.3 PECM Point Type

### Physical Entity Control Module

Each **P**hysical **E**ntity **C**ontrol **M**odule (PECM, pronounced “peck’em” ) represents one fieldbus network physical device and encapsulates the data it contains which characterize its network operational behavior. A PECM is a TPS Network tagged entity, representing a single FBAP VFD. Only Field Devices supporting a single FBAP VFD are supported.

A PECM is comprised of a VFD resource block, System Management Information Base (SMIB) and Network Management Information Base (NMIB). A PECM, by convention, uses one of the slots 119-32, although it could use the lower addresses. The first 32 address slots are typically used for FBCM points. A PECM does not contain a Fieldbus Application Process function block or a transducer block.

## PECM Point Detail Displays

A PECM point first page is shown in the following figure. A PECM has no group display. Selecting the **DEVICE DETAIL** target brings up the Device Detail display.

**PECM Point Display, First Page**

```
                                                    10 Aug 99 14:41:07   1
                                          NETWRK VIEW <>
RST3K1P     REAL ST3000 DEVICE       E4 R600 FIELDBUS &I14 HP [FIRST    PAGE]

        - - - -    CM TYPE  PECM
                   BLK TAG                                        [DEVICE
                   VEN NAME Honeywell                              DETAIL]
                   MODEL    ST3000FF
                   VFD REV  Rev 3.00

        RST3K1P

        RST3KEY
                                                        POINT DATA
                                                        PTEXECST   ACTIVE
                                                        ALENBST    ENABLE
                   PT TYPE  CMNIM       RS STATE ONLINE  ASSOCDSP
                   LCN NODE 47          DEV STAT OK      $AUXUNIT       --
                   PROC NET 14          SEGMENT  003
                   UCN NODE 39
                   DEV TYPE HPM
                   MOD NUM  32
                   MOD TYPE FBUS
                   SLOT NUM 117
```

The $AUXUNIT and ALENBST parameters have no application for the PECM point displays.

**PECM Device Detail First Page**

```
                                                    10 Aug 99 14:42:30   1
                                          NETWRK VIEW <>
RST3K1P          REAL ST3000 DEVICE        E4  R600 FIELDBUS &I14 HPM39
                                                              FIRST PAGE
                                                                 REFRESH
             PD TAG   RST3K1                          SEGMENT STAT  ACTIVE
             CLASS    LINKMAST                        PTEXECST      ACTIVE
             PT TYPE  PECM
             MODE       AUTO                          DEVICE STAT   ACTIVE
                                                      RB STATE      ONLINE
 ASSOC CM     122
 FB NETWORK     3
 SEGMENT       01
 SEG NAME    I32LINK3S
 DEV ADDR      33

 PHY DEV MODEL SERIAL NR    48574C0002-HWL-ST3000-4003015312
 MANUFACTURER DEV MODEL NR  FD-MIB
 MANUFACTURER NAME          Softing
 REVISION NUMBER            1.51

 LINK I/F ERRORS

        UCN  14   IOM   32   Fbus Seg   Fbus Net    Device Block   Block
        HPM  39    SLOT 117   Status    Statistics  Summary        Detail
        FTWABS69.06
```

The PECM device detail Configuration page is shown in the following figure.

**PECM Configuration Page**

```
                                                    10 Aug 99 14:43:41   1
                                          NETWRK VIEW <>
RST3K1P          REAL ST3000 DEVICE        E4  R600 FIELDBUS &I14 HPM39
                                                                CONFIG PAGE
                                                                   REFRESH

             NUMBER OF FBCMs ASSIGNED TO VFD     2

             FBAP VFD TAG NAME
             FBAP VFD REF NUMBER       1.0

        UCN  14   IOM   32   Fbus Seg   Fbus Net    Device Block   Block
        HPM  39   SLOT 117    Status    Statistics  Summary        Detail
```

## Targets to PECM Pages

The targets on the various PECM pages give the user access to other displays related to this point.

The PECM display **FIRST PAGE** target brings up the targets for selecting the Resource Block (and other associated displays), as shown in the following display.

**PECM with Targets to View Resource Block Pages**

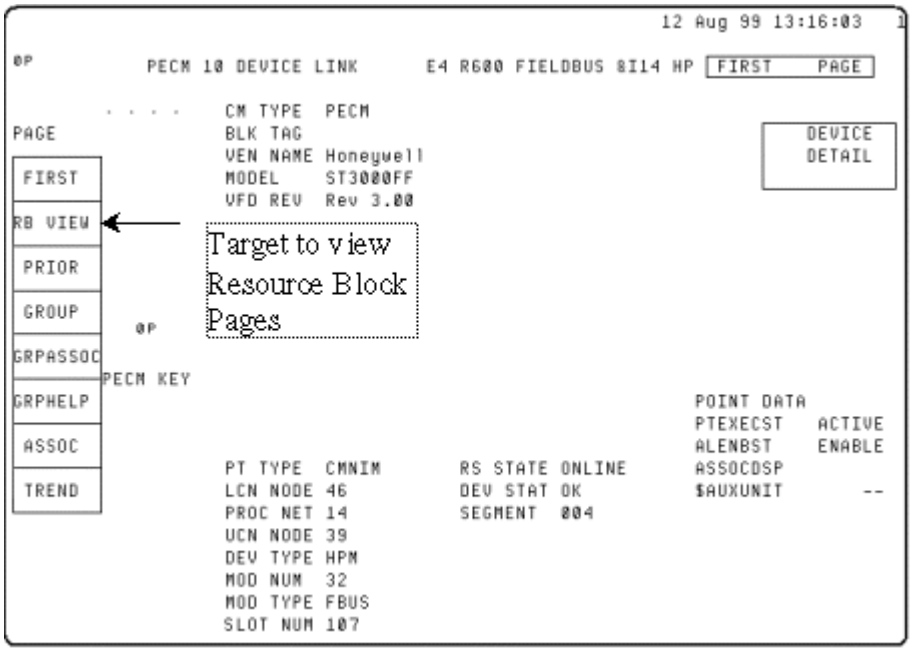


## Example PECM Resource Block View

The first page, subpage 1 of the Resource Block is shown in the following figure. The resource block has the following views in addition to the display in the following figure:

- Operator Static
- All Dynamic
- Other Static

Views may have more than one subpage.

**Resource Block — Operator Dynamic, Subpage 1**

```
                                                        12 Aug 99 13:03:55   1

OP          PECM 10 DEVICE LINK      E4 R600 FIELDBUS &I14 HP  RB VIEW  PAGE   1
                Operator Dynamic Data -  ST3000 Resource Block    SUBPAGE 1

        PARAMETER    INDEX VALUE

        ST_Rev                 129
        Mode_Blk           TARGET   : Auto
                           ACTUAL   : Auto
                           PERMITTED: OOS, Auto
                           NORMAL   : Auto
        Block_Err          Other, SimulationActive




        RS_State           Online
        Free_Time           78.4610
        Fault_State        Clear
```

## 6.4 FBCM Point Type

### Function Block Control Module

A **F**unction **B**lock **C**ontrol **M**odule (FBCM, pronounced “eff-bee-see-em”), represents a portion of a control strategy. The types of FBCMs which may be built are:

- a “basic” control FBCM which encapsulates a single FBAP process function block.
- a “basic” I/O FBCM which encapsulates a single FBAP process I/O function block and a single transducer block.
- a “basic” transducer FBCM which encapsulates a single FBAP transducer block.. (This construct is useful for transducers that are associated with more than one I/O function block, or if the transducer block provides alarm reports which are propagated through the TPS Networks system.)

In summary, an FBCM point contains one function block and/or one transducer block.

Function blocks within the FBCM are linked using TPS Builder. See the *Fieldbus Implementation Guide*

## FBCM Point Detail Display

The FBCM Point Detail display is reached by pressing **DETAIL** on the keyboard (or, on the GUS Station, selecting Displays/Operating/DETAIL) and typing the Point ID in the port.

### Analog Input Point Detail Display

```
                                                          10 Aug 99 11:12:57   1
                                              NETWRK VIEW <>
AI_ST_CMTRF  AI ST3000                E4 R600 FIELDBUS &I14 HP [FIRST    PAGE]
                 PVAUTO    53.7764     ALARM LIMITS        POINT DATA
100% -  . . . .
                 PVCALC    53.7764     PVHHTP         92   PTEXECST   ACTIVE
 75% -           LASTPV    54.3851     PVHITP         82   ALENBST    ENABLE
                                       PVLOTP         22   NMODE        AUTO
 50% -     ||                          PVLLTP         12   PNTFORM      FULL
                                                            PVRAW     53.7764
 25% -     ||
  0% -     |_|

       AI_ST_CM
       TRF
       FBCM-EU   CM TYPE  FBCM
         FBCM    BLK TAG
                                       RANGE LIMITS
              0  PRIMMOD ------        PVEXEUHI  ------    ALG TYPE AI
                 CONTCUT  OFF          PVEUHI        100   BLKODIDX   257.00
             54  PT TYPE  CMNIM        PVEULO          0   TBODIDX    430.00
                 LCN NODE 47           PVEXEULO  ------    PECM NUM 119
                 PROC NET 14                               TB TYPE  PRESBAS
                 UCN NODE 39
          AUTO   DEV TYPE HPM
                 MOD NUM  32
                 MOD TYPE FBUS
                 SLOT NUM 001
```

Selecting the first page target brings up the menu as shown in the following figure.

**First Page Menu for Views**

```
                                                        10 Aug 99 11:12:57   1
                                              NETWRK VIEW <>
AI_ST_CMTRF  AI ST3000                E4 R600 FIELDBUS &I14 HP [FIRST    PAGE]
                    PVAUTO    53.7764     ALARM LIMITS        POINT DATA
100% -  . . . .
                    PVCALC    53.7764     PVHHTP         92   PTEXECST   ACTIVE
 75% -              LASTPV    54.3851     PVHITP         82   ALENBST    ENABLE
PAGE                                      PVLOTP         22   NMODE        AUTO
                                          PVLLTP         12   PNTFORM      FULL
 FIRST                                                         PVRAW     53.7764
 CONFIG
 FB VIEW
 TB VIEW    AI_ST_CM
            TRF
            FBCM-EU   CM TYPE  FBCM
              FBCM    BLK TAG
 PRIOR                                    RANGE LIMITS
          0         PRIMMOD ------        PVEXEUHI  ------    ALG TYPE AI
 GROUP                CONTCUT  OFF        PVEUHI        100   BLKODIDX   257.00
         54         PT TYPE  CMNIM        PVEULO          0   TBODIDX    430.00
GRPASSOC            LCN NODE 47           PVEXEULO  ------    PECM NUM 119
                    PROC NET 14                               TB TYPE  PRESBAS
GRPHELP             UCN NODE 39
      AUTO          DEV TYPE HPM
**MORE**            MOD NUM  32
                    MOD TYPE FBUS
                    SLOT NUM 001
```

## Block Pages (VIEW Pages)

Block pages apply to function blocks and transducer Blocks assigned to a FBCM and resource blocks assigned to a PECM. Block pages are accessed through page from the Point Detail Display, fb view, tb view, and rb view, or by page fwd page back . Within each of views, up to four pages of data are accessible (these block pages are known in FF as VIEWs 1 through 4): Operator Dynamic, Operator Static, All Dynamic and Other Static. The VIEW pages may have subpages.

The block page of an FB VIEW for an Analog Input point in the Operator Dynamic view is shown following this text.

A user can page through the entire set of Point Detail/VIEW pages for the point by using the [PAGE FWD] or [PAGE BACK] functions on the Operator's keyboard.

Note that the Block Pages use the FF Parameters.

**FB VIEW Analog Input Operator Dynamic Data**

```
                                                    10 Aug 99 11:16:18   1
                                          NETWRK VIEW <>
AI_ST_CMTRF  AI ST3000                E4 R600 FIELDBUS &I14 HP [FB VIEW  PAGE   1]
                 Operator Dynamic Data -  ST3000 AI Block          SUBPAGE 1

          PARAMETER    INDEX VALUE

          ST_Rev                 286
          Mode_Blk           TARGET   : Auto
                             ACTUAL   : Auto
                             PERMITTED: OOS, Man, Auto
                             NORMAL   : Auto
          Block_Err          SimulationActive




          PV                  89.7771  * CRIT ALARM
          Out                 89.7771  * CRIT ALARM
          Field_Val           89.7771  * CRIT ALARM
```

## 6.5 Parameter Mapping and Projection

### Access to Parameters

In order for the detail, group, alarm, and network displays to gain access FF parameter, process data such as setpoints, process variables, mode, etc. are brought into traditional TPS parameters wherever possible. If the data structure has only one element, it is possible to “project” these into the corresponding TPS parameter. When the FF data is composed of multiple elements, one, some, or all of these elements may be “mapped” into independently named TPS elements, one for each element. Parameter projection and parameter mapping concern the ability to view the value of a fieldbus parameter in the corresponding TPSN CM strategy. In cases where the parameter meaning is not clear to the user, the Parameter Reference Dictionary should be consulted

### Mapped Parameters

Parameter mapping is used when there is a one-to-many relationship between a fieldbus parameter and a TPN parameter. This is normally used to support the fieldbus structured parameter. For example, the fieldbus parameter *Bk_Cal_Out* creates the following mapping:

- The value variable *Bk_Cal_Out.Value* is mapped to the TPSN parameter **FFBCOPVL**

- The status variable *Bk_Cal_Out.Status* is mapped to the TPSN parameter **FFBCOPST**.

The fieldbus AI OUT parameter has both a value and a status. The value will be mapped to the TPS parameter PV and the quality portion (*good*, *bad*, *uncertain*) will be mapped to TPS parameter PVSTS.

Manufacturer specific parameters may be added to the TPS Builder repository during processing of a Device Description. If required, these parameters may be mapped so that they can be accessed in TPN. Mapping is performed to an array of generic parameters. These arrays exist for Real **(NN)**, Integer **(INT)**, String **(STR)** and Flag **(FL)** data types. For any block, the user is able to select the parameters to be mapped (this could be any unmapped parameter, not just manufacturer-specific parameters) and then the position the parameter in the relevant array. The display will show any parameters already mapped into the relevant array

### Projected Parameters

Parameter projection is used when there is a one-to-one relationship between a fieldbus parameter and a TPN parameter. For example, the fieldbus parameter *Dv_Hi_Lim* is projected to the TPN parameter **FFDVHILM**.

### Structured Parameters

A structured parameter is a parameter that is composed of multiple elements or variables. These elements or variables are modeled as sub-parameters and must be of the FF basic variable types. These element parameters are usually read or written as one unit.

Structured parameters are identified on the TPS Builder Configuration Form with a control showing an ellipsis. The detailed parameter values are displayed separated by a comma. Selecting this control opens a further configuration form showing the detailed parameters that make up the structured parameter. The individual parameters can then be amended.

The sub-parameters in a structured parameter are accessed using an extended version of the OpenParam( ) method. The parameter name is accessed by qualifying it with the structured parameter name in the format pIStrategy->OpenParam(StructuredParameterName.SubParameterName). If the structured parameter is indexed, the format of the method would be pIStrategy->OpenParam(StructuredParameterName(Index).SubParameterName). A further method is exposed to allow those users employing the automation interface to access sub parameters of structured parameters.

### R610 Parametric Classifications

With R610 and greater, fieldbus parameters are classified as A, B and C for read/write access. Refer to the Introduction in *PM Family Parameter Reference Dictionary* for

listings of Class A, B and C parameters. Always consult the PRD if you are not sure of the classification. See access restrictions for HPM/CL and AM/CL in the discussion about CL Access to Fieldbus Parameters.

## 6.6 Peer-to-Peer Connections to Field Device Parameters

### Field Interconnections

For FF-compliant devices, such as transmitters which contain a function block (in this case, an AI) to make its primary variable, the OUT parameter available to other blocks, an inter-device connection is needed. The most efficient way for TPS to collect these values on a periodic and timely basis is for the LAS to call for the desired parameter to be published on the wire periodically. The Virtual Communications Relationship (VCR) is the FF term for the named set of parameters that make possible inter-device connections. A *link-object* is the FF term for the named set of parameters that provides inter-block linkage through a VCR. Then, a link object and corresponding VCR is established in the fieldbus IOP by TPS Builder such that the IOP expects to subscribe to the variable whenever it is published.

### Control Interconnections

The methods of control connections between TPS and FF devices differ in that the fieldbus IOP supports control downstream only. That is, it controls downstream function blocks but does not permit control by an upstream block that resides on the fieldbus. (Being controlled by an upstream application would be atypical).

The fieldbus IOP can communicate to a downstream block using either of two methods: publication (publish/subscribe) or writing messages (client/server). The publication technique permits the IOP to appear to the segment to be another FF device. The published IOP output is subscribed to by the receiving device-resident block such as an analog output (AO) or PID, usually by its CAS_IN (input) parameter connection. This connection is generally utilized when the downstream control block is in Cas (cascade) mode.

### Remote Out or Direct Digital Control

The client-server technique permits the IOP to appear to the FF segment to be a “computing device.” The written output is received by a block such as an AO or PID, usually by its RCAS_IN input parameter connection. This connection is generally utilized when the downstream control block is in “RCas” (remote cascade) mode. In the following figure, the back-calculation output in Cas mode (BKCAL__OUT) of the field-resident function block is published by the downstream block and subscribed to by the fieldbus IOP. This value is internally provided to the algorithm in the HPM. The back-calculation output in RCas mode (RCAS_OUT) of the field-resident function block is

read (through the client/server read) by the fieldbus IOP, and provided to the algorithm in the HPM.

The client/server technique permits the IOP to act in what is sometimes called (Direct digital control) DDC mode (Remote out in FF terms). The output is received by a PID block by its ROUT_IN input parameter connection, as shown in the following figure. This connection is utilized only when the downstream control block is in ROut (Remote Out) mode. The back-calculation output (ROUT_OUT) of the field-resident function block is published by the downstream block and subscribed to by the fieldbus IOP. This value is internally provided to the Process manager control algorithm.

**Regulatory Control in HPM, AI, Backup PID and AO in Field**

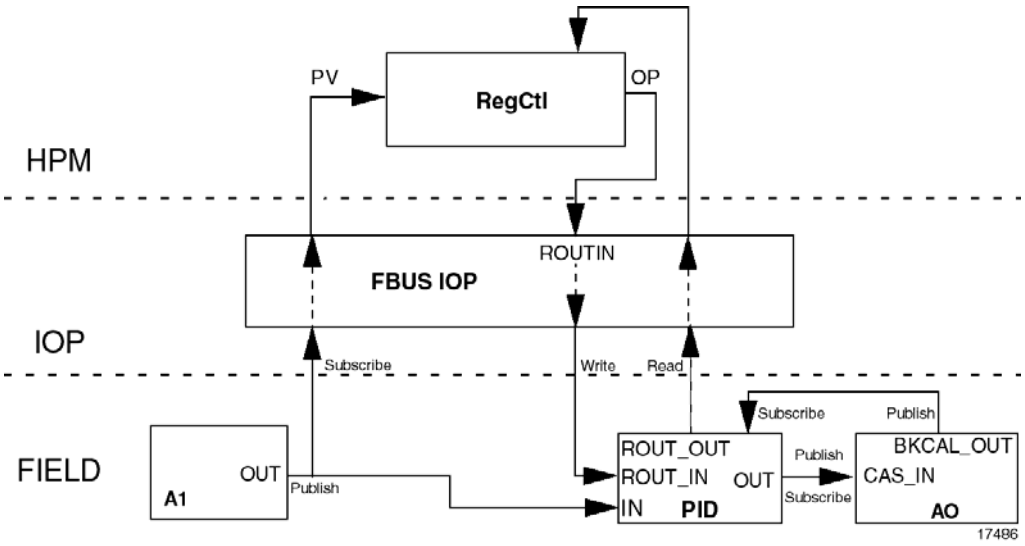


## Consistent Control Relationship

The relationship between function blocks in FF is consistent: downstream action with upstream feedback. The relationship of the fieldbus IOP to an FF AO is the same as the relationship of the fieldbus IOP to an FF PID. “Fan out” of HPM RegCtl is supported to FF blocks (AO, PID, or some of each), but if at least one of the elements of a RegCtl fanout is to another RegCtl algorithm in the HPM, **all** elements must be to RegCtl algorithms in the HPM and not to any FF blocks.

Note that the LAS synchronizes devices on the fieldbus network to a schedule, but the time sequence processing of the algorithms in the HPM is not synchronized to LASs associated with it in the fieldbus. This is because the HPPM is providing service to many

devices, all with different schedules. Each fieldbus network connected to the HPPM has its own unique schedule. Different schedules exist in the APM and in PM peers with which the HPPM is also involved in control activities.

The LAS fieldbus provides for peer-to-peer publish/subscribe connections independent of the IOP. The IOP can subscribe to the data published between the function blocks.

### Control Connections through HPM

Within the fieldbus IOP, devices on one segment cannot communicate with devices on another, except through connections to control algorithms in the HPM. Refer to the restrictions on “fan-out” described earlier in this section.

## 6.7 Parameter Support in Displays

### Schematics

Standard and custom displays are provided with process and maintenance through the fieldbus IOP. When the TPN and the FF parameters have a one-to-one match, the FF parameter is projected to the appropriate TPS parameter. For example, the process variable in FF devices is projected to PV in TPS. However, the FF PV also contains a status, which the IOP will use to set a bad value, or set the value to NaN to convey the questionable status. Parameters in fieldbus may contain structured parameters in that they contain more than one value. In such case TPS mapping may decompose the structure and place the value in one or more parameters. For example, the fieldbus parameter *Bk_Cal_Out* creates the following mapping:

- The value variable *Bk_Cal_Out.Value* is mapped to the TPSN parameter **FFBCOPVL**.
- The status variable *Bk_Cal_Out.Status* is mapped to the TPSN parameter **FFBCOPST**.

Always consult the Parameter Reference Dictionary when using a parameter in a custom display or control strategy using CL.

## Fieldbus Additions to Conventional Displays

Standard operating schematics and displays have been modified to include field bus data. The following table summarizes these changes.

| Display | Modifications |
|---|---|
| HPM Status Display | Add support for FB IOP |
| IOM Detail Display | Add navigation targets |
| IOP Slot Summary | Add support for displaying CM in FB IOP slots |
| Detail Display | A new point type for fieldbus has been added |
| Group Displays | Includes the new fieldbus point type |
| Organizational Display | Adds the CM subtype |

## New Displays for Fieldbus

New displays are added to support fieldbus.

| Display | Modifications |
|---|---|
| Fieldbus Network Status | ID/Status of SECMs, PECMs on a FB IOP |
| Fieldbus Device Detail | Status/detailed data for a PECM or SECM |
| Fieldbus Device Slot Summary | ID/Values of all FBCMs belonging to a PECM |
| Fieldbus Network Statistics | Statistical data for FB devices on a FB IOP |

## Calling Fieldbus Displays

The calling tree for fieldbus network displays is shown in the following figure.

**Calling Tree Fieldbus Displays**

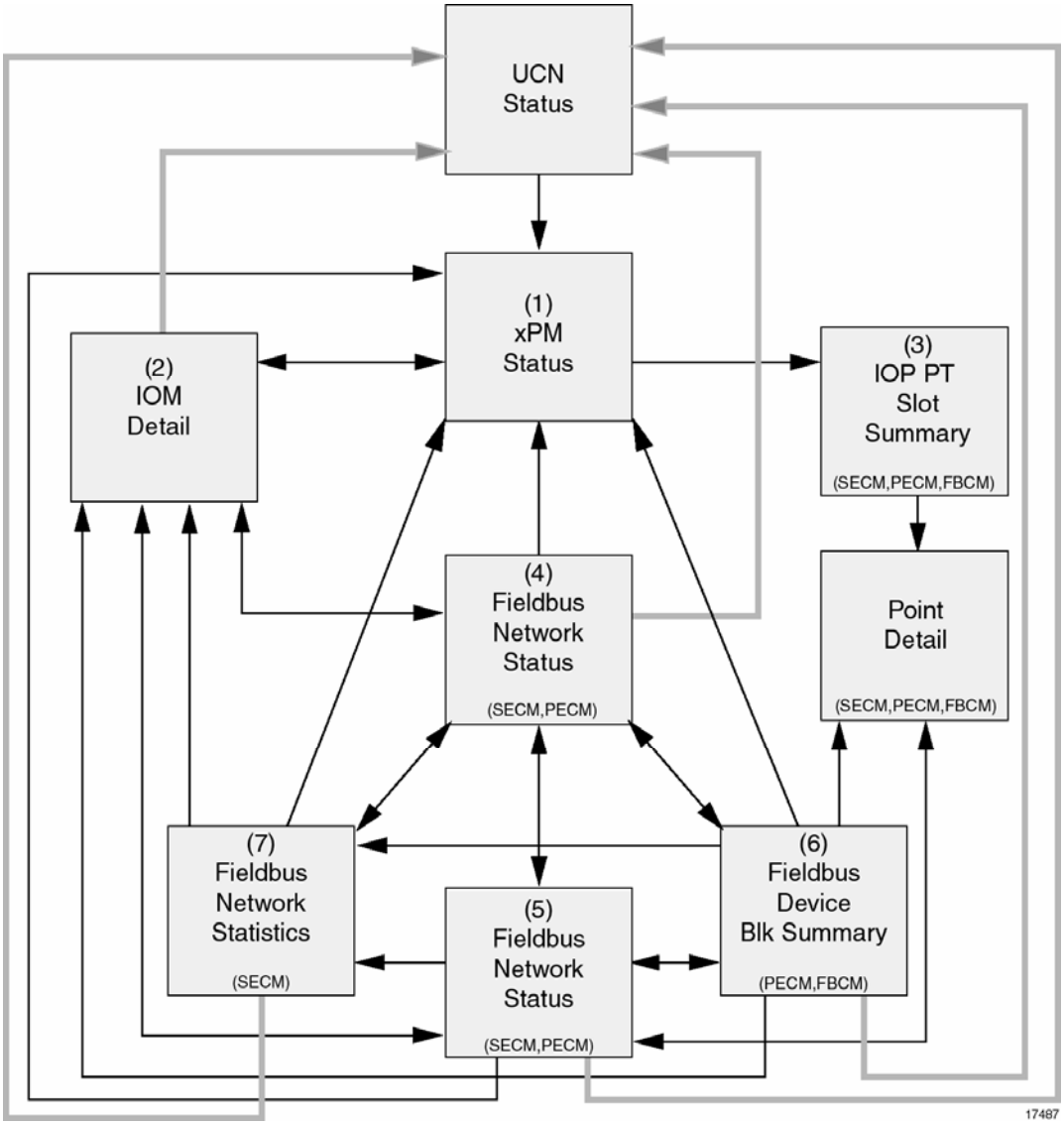

The Control Modules are called as shown in the following figure.

**Calling Tree CM Point Detail Displays**

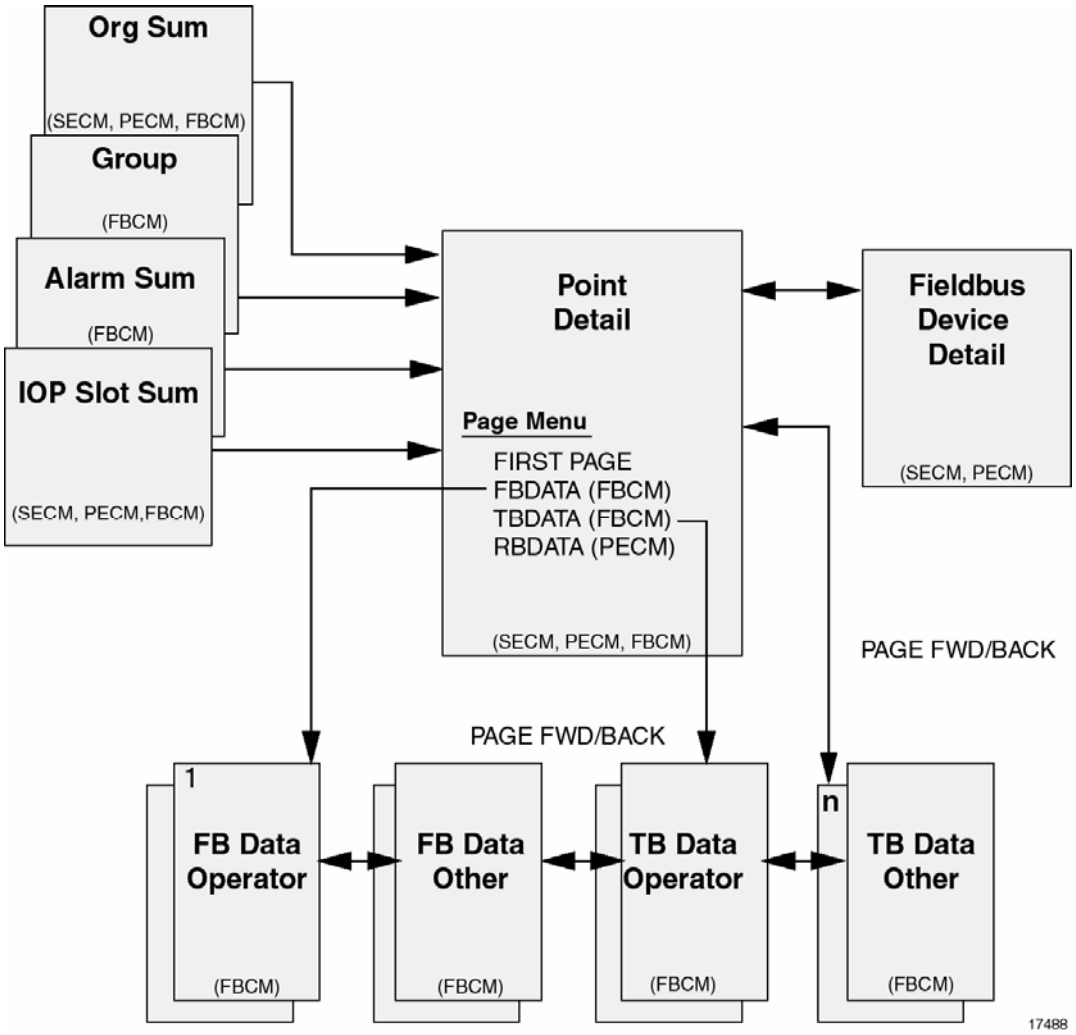

## CL Restrictions

Control Strategies using the proprietary CL language can access the fieldbus parameters that are mapped or projected to TPS parameters with certain restrictions as described in CL Access to Fieldbus Parameters. Consult the *Parameter Reference Dictionary* for the parameter name. Some of the parameters on the block pages are view only and cannot be referenced on custom schematics. See the list of common FF parameters in the discussion regarding Schematic Parameter Access.

## Group Display

Group Displays are built using the Group Display. The group display is able to hold points with the current available types plus fieldbus CM points with a CMTYPE of FBCM. (PECM and SECM points should not be included in a Group Display, as they contain no values). The structure of the point's detail is similar to other LCN points. The format for a FBCM PID point type will resemble HG and NIM regulatory control points that have PID algorithms. The following figure is an example of the format of a Group Display. (Group Display building instructions are located in the Area Form Instructions and Data Entity Builder Manual.)

The CM point differs from standard point types in its Mode. CM point types have a different Mode parameter and a different set of possible values for the Mode. The CM point Mode will be a composite of ACTUAL and TARGET modes for the CM point.

### Example of Group Display

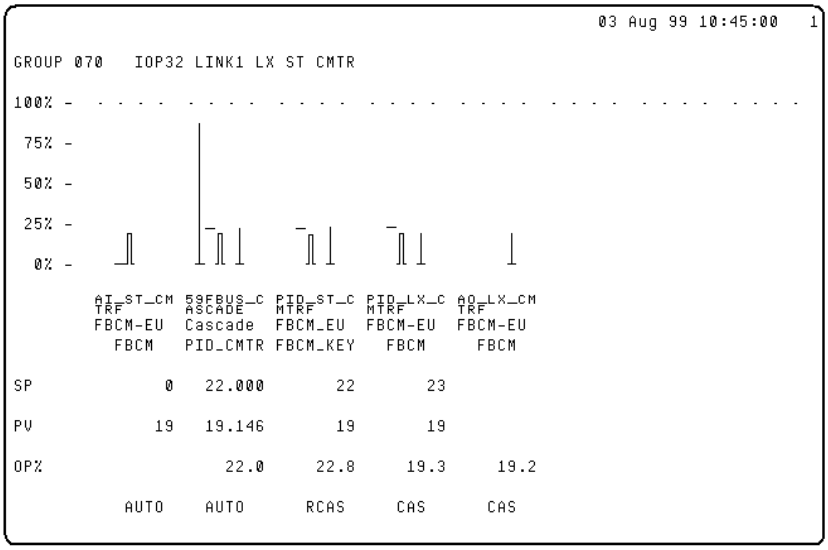


## MetaData Based Detail Display

As the TPS builder completes the configuration (or modification) of a fieldbus network for a UCN, its writes a new Detail Display Metadata file to the HM. The NIM is the LCN data owner of the data in this file, so it is notified that a new file exists. When the primary NIM on the associated UCN detects this new file it updates it metadata database. This metadata is used primarily for display purposes.

## Detail Display

The fieldbus point detail display is similar to other TPN displays, as shown in the following figure.

**Example of AI Point Detail Display**

```
                                                          10 Aug 99 11:12:57   1
                                                NETWRK VIEW <>
AI_ST_CMTRF AI ST3000                  E4 R600 FIELDBUS &I14 HP [FIRST    PAGE]
                  PVAUTO    53.7764     ALARM LIMITS        POINT DATA
100% -  - - - -
                  PVCALC    53.7764     PVHHTP         92   PTEXECST   ACTIVE
 75% -            LASTPV    54.3851     PVHITP         82   ALENBST    ENABLE
                                        PVLOTP         22   NMODE        AUTO
 50% -                                  PVLLTP         12   PNTFORM      FULL
                                                             PVRAW     53.7764
 25% -

  0% -

        AI_ST_CM
        TRF
        FBCM-EU   CM TYPE  FBCM
          FBCM    BLK TAG
                                        RANGE LIMITS
               0  PRIMMOD ------        PVEXEUHI  ------    ALG TYPE AI
                  CONTCUT  OFF          PVEUHI        100   BLKODIDX   257.00
              54  PT TYPE  CMNIM        PVEULO          0   TBODIDX    430.00
                  LCN NODE 47           PVEXEULO  ------    PECM NUM 119
                  PROC NET 14                               TB TYPE  PRESBAS
                  UCN NODE 39
           AUTO   DEV TYPE HPM
                  MOD NUM  32
                  MOD TYPE FBUS
                  SLOT NUM 001
```

By selecting the **FIRST PAGE** target, a menu of pages for the point will be displayed; a selection from this target will cause the selected page to appear, as shown in the following figure.

### Example of AI Point Detail with Menu

```
                                                          04 May 99 08:52:55   4

LT_701F      FLOW IN HOUSTON          A1 APM 241                 FIRST    PAGE
                PVAUTO    75.0000     ALARM LIMITS          POINT DATA

PAGE            PVCALC    75.0000     PVHHTP    ------      PTEXECST   ACTIVE
                LASTPV    75.0000     PVHITP    ------      ALENBST    ENABLE
 FIRST                               PVLOTP    ------      NMODE        AUTO
                                     PVLLTP    ------      PNTFORM      FULL
 CONFIG                                                    PVRAW     75.0000
FB VIEW
TB VIEW
        LT_701F
 PRIOR          CM TYPE  FBCM
        LEARNING BLK TAG
 GROUP                               RANGE LIMITS
        ------  PRIMMOD ------      PVEXEUHI  ------      ALG TYPE AI
GRPASSOC        CONTCUT  OFF        PVEUHI        100     BLKODIDX   257.00
            75  PT TYPE  CMNIM      PVEULO          0     TBODIDX    430.00
GRPHELP         LCN NODE 21         PVEXEULO  ------      PECM NUM 119
                PROC NET 01                               TB TYPE  PRESBAS
**MORE**        UCN NODE 19
        AUTO    DEV TYPE HPM
                MOD NUM  07
                MOD TYPE FBUS
                SLOT NUM 002
```

Targets such as setpoints, modes, and alarm limits which are valid on other TPN points operate in the same manner on fieldbus based points. Mode can be selected and changed, if permitted, as shown in the following display.

**PID Point Display with Modes Selected**

```
                                                          03 Aug 99 10:52:03   1

PID_ST_CMTR PID ST3000                E4 R600 FIELDBUS &I14 HP [FIRST    PAGE]
F                 PVAUTO    ------      ALARM LIMITS        POINT DATA
100% -  - - - -
                                        PVHHTP         92   PTEXECST   ACTIVE
 75% -                                  PVHITP         82   ALENBST    ENABLE
                                        PVLOTP         22   NMODE        RCAS
 50% -                                  PVLLTP         12   PNTFORM      FULL
          _
          ][ |                          DEVHITP      20.0
 25% -    ][ |                          DEVLOTP     -20.0

  0% -    ][ _

[ MAN ]   PID_ST_C
          MTRF
[ AUTO ]  FBCM_EU     CM TYPE  FBCM
[ CAS ]   FBCM_KEY    BLK TAG
[NORMAL]                                RANGE LIMITS
[ RCAS ]       40     PRIMMOD ------    PVEUHI        100   ALG TYPE PID
[ ROUT ]              CONTCUT  OFF      PVEULO          0   BLKODIDX   300.00
[ OOS ]        40     PT TYPE  CMNIM    CVEUHI    100.000   TBODIDX    430.00
                      LCN NODE 47       CVEULO    0.00000   PECM NUM 119
            41.0      PROC NET 14                           TB TYPE  NOTCNFG
                      UCN NODE 39
           RCAS       DEV TYPE HPM
                      MOD NUM  32
[ ENTER ]             MOD TYPE FBUS
                      SLOT NUM 004
```

## VIEW Pages

Page 1 of an FBCM point FB VIEW is shown in the following figure. The parameters displayed in the POINT DATA section will vary depending upon the point. Some pages will have parameters which can be selected (shown in yellow text) and changed on the page; others are view only and cannot be changed (shown in green text). Many VIEW pages will have multiple subpages.

The menu can be used to navigate through the VIEW pages for function block, transducer block, and resource block data.

1. Operator Dynamic Data
2. Operator Static Data

3. All Dynamic Data
4. Other Static Data

FB VIEW will display the first subpage ***(Operator Dynamic)*** of the FB VIEW as shown in the following figure.

**FB VIEW Operator Dynamic Data — PID Block Subpage 1**

```
                                                        10 Aug 99 13:48:49   1
                                          NETWRK VIEW <>
PID_ST_CMTR PID ST3000                E4 R600 FIELDBUS &I14 HP [FB VIEW  PAGE   1]
F                Operator Dynamic Data -  ST3000 PID Block         SUBPAGE 1

          PARAMETER    INDEX VALUE

          ST_Rev                 209
          Mode_Blk           TARGET   : RCas
                             ACTUAL   : RCas
                             PERMITTED: OOS, Man, Auto, Cas, RCas, ROut
                             NORMAL   : RCas
          Block_Err




          PV                  41.0910  ! ADVIS ALARM
          SP                  40.0000
          Out                 37.9707
          Cas_In              35.5255  # OUT-OF-SERVICE
          Trk_In_D              # OUT-OF-SERVICE
          Trk_Val             0.00000  # OUT-OF-SERV/CN
```

### FB VIEW Operator Dynamic Data — PID Block Subpage 2

```
                                                        10 Aug 99 13:51:22   1
                                              NETWRK VIEW <>
PID_ST_CMTR PID ST3000                E4 R600 FIELDBUS &I14 HP  FB VIEW  PAGE   1
F                Operator Dynamic Data -  ST3000 PID Block          SUBPAGE 2

         PARAMETER    INDEX VALUE

         Alarm_Sum          CURRENT       :
                            UNACKNOWLEDGED: Block_Alarm
                            UNREPORTED    :
                            DISABLED      :









         GAIN_COMP           0.50000
         ERROR_ABS           0.19501
         WSP                 30.0000
```

***Operator Static*** is shown in the following figure.

**FB VIEW Operator Static —PID Block**

```
                                                          04 May 99 11:42:15   4

LC_701F     THE MASTER IN CONTROL    A1 APM 241                 FB VIEW  PAGE   2
                 Operator Static  Data -  ST3000 PID Block          SUBPAGE 1

          PARAMETER    INDEX VALUE

          ST_Rev                 33
          PV_Scale           EU AT 100%   :  100.000
                             EU AT 0%     :  0.00000
                             UNITS INDEX  : InH2O (4 C)
                             DECIMAL POINT:       0
          Out_Scale          EU AT 100%   :  100.000
                             EU AT 0%     :  0.00000
                             UNITS INDEX  : InH2O (4 C)
                             DECIMAL POINT:       0
          Grant_Deny         GRANT :
                             DENY  :

          ByPass             Off
          SP_Hi_Lim           100.000
          SP_Lo_Lim           0.00000
          Out_Hi_Lim          100.000
          Out_Lo_Lim          0.00000
          PID_FORM           IDEAL PID
          ALGO_TYPE          A
          OUT_LAG             0.00000
          GAIN_NLIN           0.00000
```

***All dynamic*** data is shown in the next two figures.

### FB VIEW All Dynamic Data PID Block (Subpage 1)

```
                                                        10 Aug 99 13:58:47   1
                                          NETWRK VIEW <>
PID_ST_CMTR PID ST3000                E4 R600 FIELDBUS &I14 HP [FB VIEW  PAGE   3]
F                All      Dynamic Data -  ST3000 PID Block         SUBPAGE 1

          PARAMETER    INDEX VALUE

          ST_Rev                 209
          Mode_Blk           TARGET   : RCas
                             ACTUAL   : RCas
                             PERMITTED: OOS, Man, Auto, Cas, RCas, ROut
                             NORMAL   : RCas
          Block_Err




          PV                  37.2219  ! ADVIS ALARM
          SP                  40.0000
          Out                 42.4160
          In                  37.2219  * ADVIS ALARM
          Cas_In              35.5255  # OUT-OF-SERVICE
          BkCal_In            42.3697
          BkCal_Out           40.0000  NOT INVITED
          RCas_In             40.0000
          ROut_In             0.00000  # OUT-OF-SERVICE
          RCas_Out            40.0000
```

The block alarms are displayed on subpage 2.

**FBVIEW All Dynamic Data PID Block (Subpage 2)**

```
                                                    10 Aug 99 14:01:14   1
                                          NETWRK VIEW <>
PID_ST_CMTR PID ST3000                E4 R600 FIELDBUS &I14 HP [FB VIEW  PAGE   3]
F                All      Dynamic Data -  ST3000 PID Block         SUBPAGE 2

          PARAMETER    INDEX VALUE

          ROut_Out            96.6998  NOT INVITED
          Trk_In_D              # OUT-OF-SERVICE
          Trk_Val             0.00000  # OUT-OF-SERV/CN
          FF_Val              0.00000  # OUT-OF-SERVICE
          Alarm_Sum          CURRENT       : Hi_Alarm
                             UNACKNOWLEDGED: Block_Alarm
                             UNREPORTED    :
                             DISABLED      :

          GAIN_COMP           0.50000
```

Depending upon the manufacturer's block, the Views may have multiple pages.

### All Dynamic, Subpage 3

```
                                                        10 Aug 99 14:30:22   1
                                              NETWRK VIEW <>
PID_ST_CMTR PID ST3000                E4 R600 FIELDBUS &I14 HP [FB VIEW  PAGE   3]
F                All      Dynamic Data -  ST3000 PID Block         SUBPAGE 3

          PARAMETER    INDEX VALUE

          ERROR_ABS           0.05523
          WSP                 20.0000
          BLOCK_TEST       1     181
          BLOCK_TEST       2       0
          BLOCK_TEST       3       0
          BLOCK_TEST       4       0
          BLOCK_TEST       5       0
          BLOCK_TEST       6       0
          BLOCK_TEST       7      37
          BLOCK_TEST       8      24
```

Other Static is shown in FB View Page 4. Depending upon the complexity of the block and the manufacturer's configuration, this view may have multiple pages.

**FB VIEW Other Static Data PID Block**

```
                                                    10 Aug 99 14:33:25   1
                                            NETWRK VIEW <>
PID_ST_CMTR PID ST3000                E4 R600 FIELDBUS &I14 HP [FB VIEW  PAGE   4]
F                Other    Static  Data -  ST3000 PID Block         SUBPAGE 1

          PARAMETER    INDEX VALUE

          ST_Rev                 209
          Strategy                 0
          Alert_Key                1
          Control_Opts





          Status_Opts



          PV_Ftime            0.00000
          SP_Rate_Dn         +.......
          SP_Rate_Up         +.......
          Gain                0.50000
          Reset               15.0000
          Bal_Time            0.00000
```

The tuning constants Gain, Reset, and Rate are displayed on the Other Static View. TB VIEW (transducer block) and RB VIEW (resource block) will appear depending on the existence of a transducer block and resource block for a CM point. The following figure shows a resource block, Operator Dynamic Data, for an AO Block.

**RB VIEW Operator Dynamic Data for AO Block**

```
                                                        12 Aug 99 13:03:55   1

OP          PECM 10 DEVICE LINK      E4 R600 FIELDBUS &I14 HP [RB VIEW  PAGE   1]
                Operator Dynamic Data -  ST3000 Resource Block    SUBPAGE 1

        PARAMETER    INDEX VALUE

        ST_Rev                  129
        Mode_Blk            TARGET   : Auto
                            ACTUAL   : Auto
                            PERMITTED: OOS, Auto
                            NORMAL   : Auto
        Block_Err           Other, SimulationActive




        RS_State            Online
        Free_Time            78.4610
        Fault_State         Clear
```

# 7. Fieldbus Control Considerations

## 7.1 HPM Control Loss

### HPM Control Loss

Control algorithms can reside in the HPM and/or as function blocks in the device. Fieldbus H1 segments can be configured to have power supplies and battery backup independent of power to the HPM; therefore the bus segment and the devices could retain power if power was lost or interrupted in the HPM.

In the control example in the following figure, the Regulatory Control Point is resident in the HPM. Assume that the RegCtl point is configured to pull its source from the fieldbus function block output into the PV and its output is pushed to an Analog Output component point in the same HPM. If the output becomes indisposable the Regulatory Control point will operate in the manner described in the Regulatory Control Point section of the HPM Control Theory manual. If the HPM is no longer in operation, the RegCtl is no longer scanning, so it is not receiving its input. The RegCtl algorithm has a parameter, FAILOPT, which has two possible configurations: HOLD or UNPOWERED. Upon detection of the failure, the point will either hold its output or go to unpowered depending upon the configuration of this parameter. If the failure is due to loss of power, the point will always revert to **unpowered**. The Regulatory Control Option BADCTLOP determines if mode sheds to manual on detection of a bad PV (refer to the *PM Family Parameter Reference Dictionary* for BADPVFL definition).

The fieldbus device output value is a structured parameter in that it contains both the value and the status byte. Support of RegCtl does not use the fieldbus status byte; instead it relies on the fieldbus IOP to embed the status byte information into the value as appropriate. If the HPM RegCtl's PV input connection is made to the fieldbus PV parameter, the HPM is given more detailed status information.

**Input in Fieldbus Device, Regulatory Control and Output in HPM**

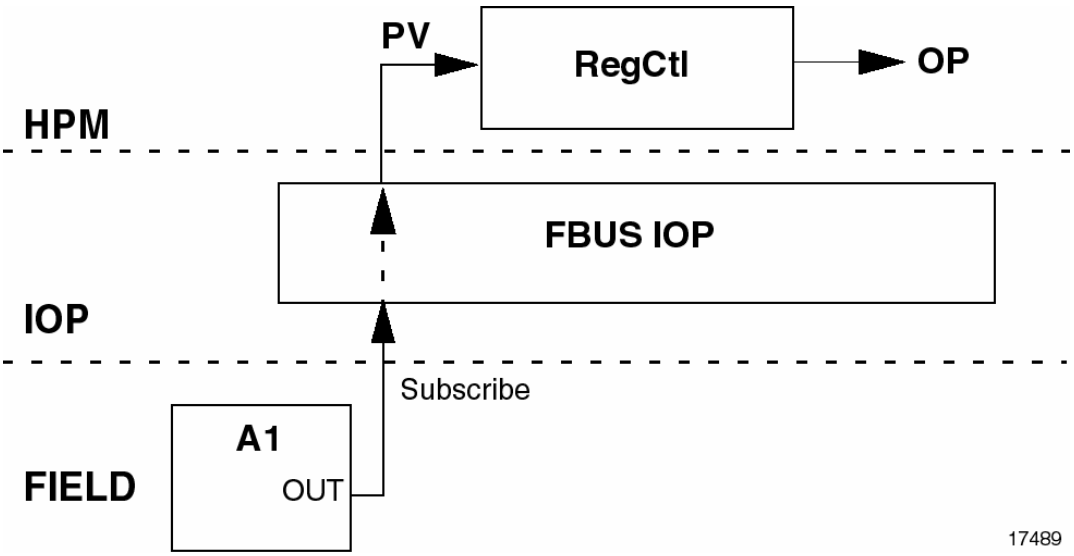


If the IOP has failed, the backup LAS scheduler takes over (when configured to do so) and the AI continues to publish its data, and when the IOP is restored to service it will again furnish the AI output to the PV in the RegCtl algorithm. Input to the PV in the RegCtl algorithm will be the default data as defined in the "PV source selection" section of the *HPM Control Theory* document.

### HPM Failure

Upon detection of an HPM failure a system alarm will be generated. Restart is through the HPM status display. As the IOP is HPM resident, no point processing takes place. Processing is stopped and outputs are held. Slot processing takes place only when the HPMM box state is RUN. Only those slots whose point execution state (PTEXECST) is ACTIVE are processed.

Operation of points is dependent upon the method of restart, as described in the *Warm/Cold Restart* section of the *HPM Control Theory* document. When power is restored to the HPM, the HPMM is switched from RUN to IDLE and back to RUN.

The operation of fieldbus segments will depend upon the configuration. If H1 segments have the same power supply and backup battery, these segments will cease operation and are dependent upon power restoration.

In the event the HPM is redundant, the secondary HPMM will take control and no failover to fieldbus will occur.

### Fieldbus IOP Restart

The IOP is the interface for TPS and the fieldbus network. It contains the scheduling mechanism (LAS) and is responsible for collecting data and mapping or projecting the FF parameters to TPS parameters. Under normal operating conditions the IOP serves as the Link Master of the fieldbus segment. However, the IOP resident Link Master may have another field device, such as the Honeywell ST3000, which is capable of acting as the Link Master. After an IOP failure, the segment continues to operate, assuming power is maintained to the segment, and another device on the segment can obtain the Link Active Schedule and act as the Link Master. When the IOP is returned to service it operates with this other device being the Link Master, and subsequently is able to assume link mastership if necessary.

## 7.2 HPM Failover to Fieldbus Control

If a control strategy is configured in the HPM, it can also be configured to the fieldbus network as a backup, as shown in the following figure. This configuration can be done providing the fieldbus network and the HPM are not sharing common power and backup battery sources or the problem is not in the power source. In any case, the RegCtl point, RegPV, or Logic Point and the fieldbus IOP **must** reside in the same TPN node.

In the event of HPM failure, the LAS in the IOP will no longer be the LAS and the backup LAS in one of the fieldbus devices will assume the role of LAS. The RegCtl PID in the HPM will no longer provide an output to the fieldbus resident PID. The actual mode of the PID in the fieldbus function block will go from ROut to AUTO (the target mode will remain as Rout), and will subscribe to the output from the AI function block. The mode of the AO function block will be retained as Cas.

**RegCtl PID in HPM, AI, AO and Backup PID in Fieldbus**

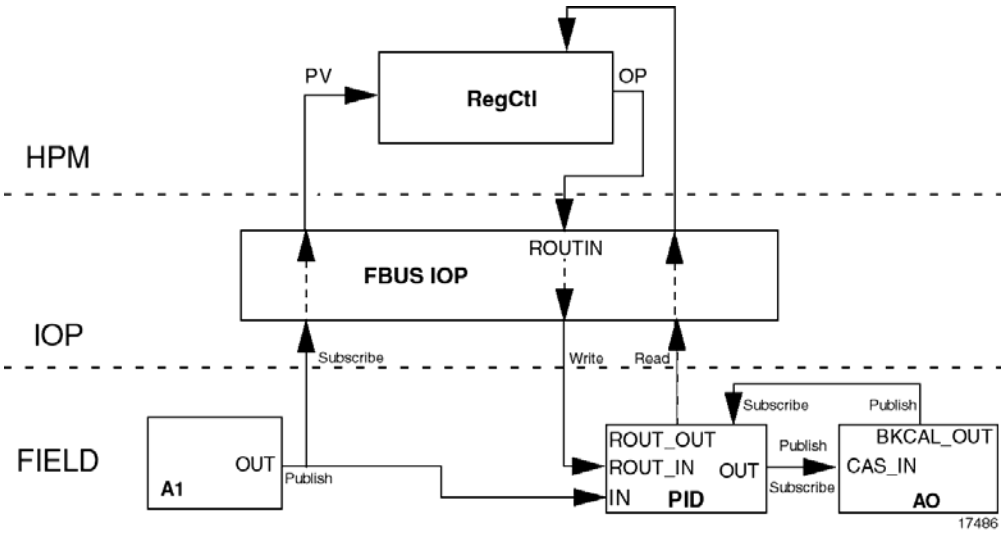


Control will be reestablished in the HPM depending upon the cause of the failover to fieldbus. If power failed, the HPM is not detecting the bad input; therefore it does not know if the AI PV value is good or bad. When power is restored to the HPM and the operating personality and database are restored, the HPM can be restarted using a warm or cold startup. In a warm startup the RegCtl point starts up in its last mode, which is AUTO, and it picks up the PV value from the AI when the RegCtl point is processed. In a cold startup, the RegCtl point is placed in MAN mode to allow the operator to change the output value of the RegCtl point. The AI PV value is brought into the RegCtl point regardless of the mode of the point, because the connection is restored to the PV parameter of the AI function block.

### PID with External Reset Feedback

If the HPM resident control algorithm PID with External Reset Feedback (PIDERFB) is used, **output to a fieldbus function block is not supported.** Since FF blocks **always** provide initialization signaling, there is no need for the user to use this configuration.

The PID in the function block will revert to RCas and resume a backup role.

| Algorithm/Block Mode | Actual Mode before Shed | Actual Mode after Shed |
|---|---|---|
| RegCtl in HPM | Auto | Auto |
| AI in fieldbus | Auto | Auto |
| PID in fieldbus | ROut | Auto (but target mode is still ROut) |
| AI in fieldbus | | |
| AO in fieldbus | Cas | Cas |

### Use of Resource SHED parameters

Execution of function and transducer blocks is controlled through the mode parameter. Modes are somewhat different in fieldbus than in TPS algorithms, in that the function block has *target*, *actual*, *permitted* and *normal* mode attributes. The target mode is the desired mode entered by an operator, and the actual mode is the mode in which the block is currently operating. The allowable target modes which may be specified in operations are defined by the permitted mode. In addition the SHED_OPT is used to configure the desired behavior when shedding; it will determine the actual shed mode if a setpoint or output are not updated within a specified time when the mode is remote-cascade or remote-output. It also determines whether the mode is retained after the remote-cascade in parameter or remote-output in parameter is updated.

The resource block contained parameters SHED_ROUT and SHED_RCAS control the shedding of the mode when host time-outs are detected. When the target and actual mode are ROut or RCas, the actual mode sheds to the next permitted mode if the remote device input is not updated within the time specified in the resource block.

When a resource block is put out of service, all function blocks which are connected to this resource will also be placed out of service.

### Block Mode Priorities

When the mode is shed, it is determined by input values, status, attribute and resource state. In the case of multiple conditions, the highest priority condition is the determining factor. If no other modes in the path are permitted, the mode may go to Man.

**REFERENCE - INTERNAL**

For a complete list of the block mode priorities, refer to Fieldbus Control Reference, HPM Failover to Fieldbus Control, Block mode priorities in the *TPS Fieldbus Reference* document.

### Conditions for Actual Modes

Actual mode attributes are calculated and the resulting mode under certain conditions.

**REFERENCE - INTERNAL**

For a complete list of the conditions by which Actual mode attributes are calculated, refer to Fieldbus Control Reference, HPM Failover to Fieldbus Control, Conditions for actual modes in the *TPS Fieldbus Reference* document.

### Back-calculation inputs

**REFERENCE - INTERNAL**

For a complete list of the target attribute values for back-calculation inputs, refer to Fieldbus Control Reference, HPM Failover to Fieldbus Control, Back-Calculation Inputs in the *TPS Fieldbus Reference* document.

### Tracking enabled

**REFERENCE - INTERNAL**

For a complete list of the target attribute values when tracking is enabled, refer to Fieldbus Control Reference, HPM Failover to Fieldbus Control, Tracking enabled in the *TPS Fieldbus Reference* document.

### Fault State/Target Mode Change/Resource State

**REFERENCE - INTERNAL**

For a complete list of the target attribute values for Fault State, Target Mode, and Resource State, refer to Fieldbus Control Reference, HPM Failover to Fieldbus Control, Fault State/Target Mode Change/Resource State in the *TPS Fieldbus Reference* document.

## 7.3 CL Access to Fieldbus Parameters

### HPM/CL Access Restrictions

There are restrictions when accessing parameters of SECM, PECM, and FBCM fieldbus points using CL/HPM. In terms of CL/HPM usage, these parameters are classified into two categories: read-only and read/write.

The read-only category indicates that CL/HPM can only read the value of the parameter. The read/write category indicates that CL/HPM can read the parameter value and can change the parameter value.

The fieldbus parameters that are supported by CL/HPM and their respective read-only and read/write categories are listed in the Introduction of the *PM Family Parameter Reference Dictionary.*

CL/HPM access to the fieldbus parameters is further restricted based on the access lock and the data type of each parameter. The access lock and data type are listed within the description of each parameter in the *PM Family Parameter Reference Dictionay.*

When using CL, please make sure that you refer to the correct access level and data types.

### AM/CL Access Restrictions

There are CL/AM restrictions when accessing parameters of SECM, PECM, and FBCM fieldbus points. The parameters for the fieldbus points are arranged into three classes that are designated as class A, class B, and class C, and the CL/AM restrictions are based on these parameter classes.

- Class A parameters are fieldbus IOP parameters that are contained in the fieldbus IOP. Read and write requests for these parameters are directed to the fieldbus IOP database.
- Class B parameters are fieldbus-device parameters that are cached (and possibly mapped) in the fieldbus IOP. Read requests for these parameter values are directed to the IOP database. Write requests are directed to the fieldbus device.
- Class C parameters are fieldbus-device parameters that are not cached in the fieldbus IOP. Read and write requests for these parameter values are directed to the fieldbus device.

CL/AM programs can control the timing of fieldbus parameter access through the BACKGRND insertion point. Access to fieldbus parameters through a foreground CL/AM program could delay the program and cause processor overruns or use fieldbus data that is old. When creating CL/AM programs that use HPM fieldbus parameters, note that all CL/AM write operations to class B parameter values and all CL/AM read and write operations to class C parameter values must be delayed. This delay should be approximately twice the execution period of the fieldbus function block as specified by the link active schedule of the fieldbus segment.

Read operations to class B parameter values are immediate. However, the value that is read back may not be the current value. The parameter values are not synchronously updated with the CL/AM execution period.

The fieldbus parameters that are supported by CL/AM are contained in a listing in the Introduction section of the *PM Family Parameter Reference Dictionary*. For ease of use, the same parameter listing in the Introduction Section also contains the respective parameter class (A, B, or C) for each parameter.

When using CL, please make sure that you refer to the correct access level and data types.

# 8. Displaying HPM Fieldbus Points

## 8.1 Schematic Parameter Access

### Accessibility defined in PRD

Custom schematics can access and parameter and the value for that parameter that is shown to be accessible in the Parameter Reference Dictionary (PRD). Some parameters are structured, in that they contain more than just the value; they may also contain a status. Refer to the PRD for the projection and mapping of the status byte. However, some of the fieldbus parameters are “view only” and are not accessible; these are not parameters usually used on custom schematics.

### Examples of Common Parameters

The following is a list of some common fieldbus parameters that might be needed on a custom schematic. The TDC parameter name is the one to be used by the display builder; the FF Parameter source is provided for information only. Access is in the usual manner, *Tagname.parameter*.

**ATTENTION**

Note that Block (Operator Dynamic, Operator Static, Other Dynamic and Other Static) use the FF parameter names. In building schematics or using CL, users should refer to the HPM Parameter Dictionary for access levels and restrictions on parameter

| Parameter Name | FF Parameter Source |
|---|---|
| PV | AI:Out.value; PD, PID: PV.Value |
| FFPVSTS | PV.Status |
| EUDESC | None |
| OP | AO:, PID: Out.Value |
| FFOPHILM | OUT_HI_LIM |
| FFOPLOLM | OUT_LO_LIM |
| MODEBLKC | MODE_BLKC.Actual+ MODE_BLKC.Target |
| FFCSINVL | CAS_IN.Value |
| FFCSINST | CAS_IN.Status |

| Parameter Name | FF Parameter Source |
|---|---|
| FFINVAL | IN.Value |
| FFINSTS | IN.Status |
| FFRCINVL | RCAS_IN.Value |
| FFRCINST | RCAS_Status |
| PVAUTO | AI: OUT.value |
| PVAUTOST | AI: OUT.Status |
| PTEXECST | None |
| FFALMCUR | ALARM_SUM.Current |
| FFRESET | RESET |
| FFGAIN | FF_GAIN |
| FFRATE | FF_RATE 0 |
| REDTAG | None |
| SP | AO, PID: SP.Value |
| FFBCINVL | BKCAL_In.Value |
| FFBCINST | BKCAL_IN.Status |
| FFSPHILM | SP_HI_LIM |
| FFSPLOLM | SP_LO_LIM |
| FFLOLM | LO_LIM |
| FFHILIM | HI_LIM |

## 8.2 Group and Detail Display Behavior

### Group Display Behavior

SECM and PECM points can not be added to a group display, but any other legitimate point type, such as an HPM RegCtl point can be added to a group containing FBCM points. The general format of a Group Display is shown in following figure.

**Group Display Including Fieldbus Points**

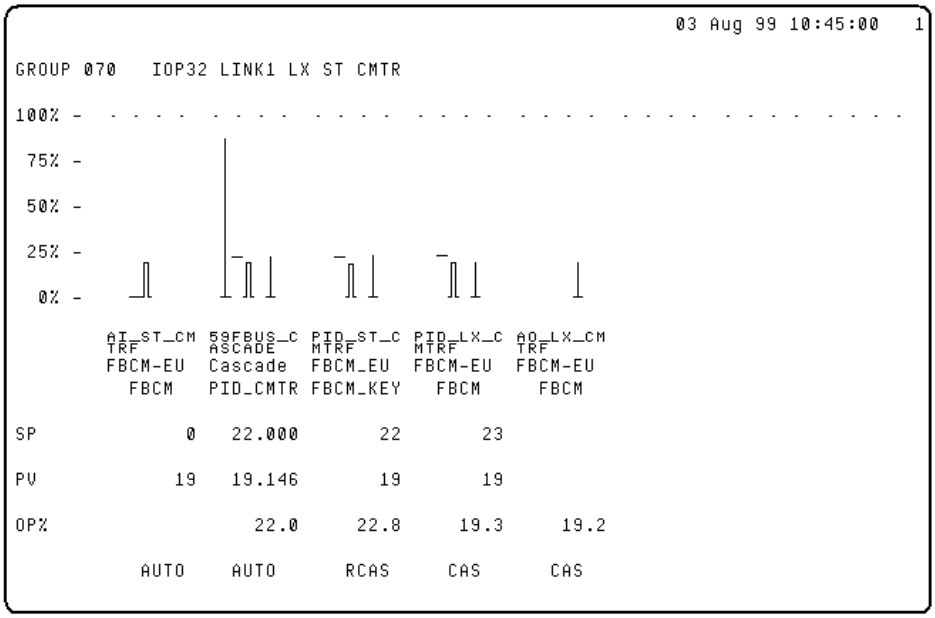


Fieldbus points are similar to other point displays, except for the Mode parameter, which is a composite of the fieldbus Actual and Target Modes. Parameters which are changeable can be selected and changed from the Group Displays.

**ATTENTION**

See the discussion in Status Byte and Data Structure Overview regarding characters following values. These characters are representations of the status.

## Point Type Detail Displays

Detail displays are provided for the following point types:

- FBCM — in addition to the displays shown in the following figures, also see detail and block pages in the discussion regarding the FBCM (see displays in FBCM Point Type discussion)
- PECM (see displays in PECM Point Type discussion.)
- SECM (See displays in SECM Point Type discussion.)

The following NIM supported parameters are used by page 1:

- CMTYPE - Determines block type, FBCM, PECM or SECM
- FBTYPE - Determines if CM point has a function block
- TBTYPE - Determine if CM point has a transducer block
- PT_DATA - Point Data Collection Set

| | FBCM AI | FBCM AO | FBCM PID | PECM | SECM |
|---|---|---|---|---|---|
| PTEXECST | X | X | X | X | X |
| ALENBST | X | X | X | X | X |
| REDTAG | X | X | X | | |
| NMODE | | X | X | | |
| PNTFORM | X | X | X | | |
| PVRAW | X | | | | |

Many of the parameters that appear on block pages are accessible only on the detail displays (not on the group displays).

### Status Byte Indication

Value fields also display the FF sub-index names if applicable for the data. FF Data types DS-65 (value and status, floating point structure), DS-66 (value and status of discrete value parameters) and DS-67 (value and status bitstring) have a status byte that is represented on displays as a 1, 3, or 16 character string following the value.

The status is composed of three parts:

1. A quality indication

2. A substatus

3. Limit indication

The block pages use the 16-character string. The following are user interpretations of the suffix fields.

### *First Suffix Character*

**REFERENCE - INTERNAL**

For a definition of the point type detail display data's first suffix character, refer to HPM Fieldbus Point Display Reference, Group and Detail Displays, Status byte suffix character indications in the *TPS Fieldbus Reference* document.

### *Last Suffix Character*

**REFERENCE - INTERNAL**

For a definition of the point type detail display data's first suffix character, refer to HPM Fieldbus Point Display Reference, Group and Detail Displays, Status byte suffix character indications in the *TPS Fieldbus Reference* document.

## Example Display with Status Indication

The following display shows an example of a VIEW (block) page with one of the status indications shown in the previous table.

### PID Block View Page 1 Subpage 1

```
                                                        10 Aug 99 13:48:49   1
                                              NETWRK VIEW <>
PID_ST_CMTR PID ST3000                E4 R600 FIELDBUS &I14 HP [FB VIEW  PAGE   1]
                Operator Dynamic Data -  ST3000 PID Block          SUBPAGE 1

          PARAMETER    INDEX VALUE

          ST_Rev                 209
          Mode_Blk           TARGET   : RCas
                             ACTUAL   : RCas
                             PERMITTED: OOS, Man, Auto, Cas, RCas, ROut
                             NORMAL   : RCas
          Block_Err




          PV                  41.0910  ! ADVIS ALARM
          SP                  40.0000
          Out                 37.9707
          Cas_In              35.5255  # OUT-OF-SERVICE
          Trk_In_D              # OUT-OF-SERVICE
          Trk_Val             0.00000  # OUT-OF-SERV/CN
```

### PV status indicators

**REFERENCE - INTERNAL**

For a definition of the PV status indicators on fieldbus group and detail displays, refer to HPM Fieldbus Point Display Reference, Group and Detail Displays, PV status indicators in the *TPS Fieldbus Reference* document.

### Output status indicators

**REFERENCE - INTERNAL**

For a definition of the output status indicators on fieldbus group and detail displays, refer to HPM Fieldbus Point Display Reference, Group and Detail Displays, Output status indicators in the *TPS Fieldbus Reference* document.

### Setpoint status indicators

**REFERENCE - INTERNAL**

For a definition of the setpoint status indicators on fieldbus group and detail displays, refer to HPM Fieldbus Point Display Reference, Group and Detail Displays, Setpoint status indicators in the *TPS Fieldbus Reference* document.

### Fieldbus data types

Fieldbus group and detail displays support the following three data types:

- DS-65 Data Type Value and Status—Floating Point Structure
- DS-66 Data Type Value and Status—Floating Point Structure
- DS-67 Data Type Value and Status—Floating Point Structure

**REFERENCE - INTERNAL**

For a details of the fieldbus data types, refer to:

- HPM Fieldbus Point Display Reference, Group and Detail Displays, Fieldbus data types in the *TPS Fieldbus Reference* document
- *PM Family Parameter Reference Dictionary*

### Detail display examples

Fieldbus FBCM point data will be accessed in the same manner as other TPS point data (except that fieldbus points have a status byte). If a parameter has been configured to be changeable, it can be selected and changed in the usual manner by the opening of a change port for the parameter. FBCM point data will also have *target* and *actual* modes.

The format for an FBCM point detail display is much the same as any TPN point, except that the display also includes the associated PECM point address. It is notable that the DEVLOTP is a negative number. In other TPN points the DEVHITP and DEVLOTP are entered as absolute values in engineering units; in the FBCM points they are relative.

#### *AI point detail display*

The following figure is an example of the first page of the FBCM Analog Input point detail display.

```
                                                          10 Aug 99 11:12:57   1
                                              NETWRK VIEW <>
AI_ST_CMTRF AI ST3000                 E4 R600 FIELDBUS &I14 HP [FIRST    PAGE]
                PVAUTO    53.7764     ALARM LIMITS        POINT DATA
100% -  - - - -
                PVCALC    53.7764     PVHHTP         92   PTEXECST   ACTIVE
 75% -          LASTPV    54.3851     PVHITP         82   ALENBST    ENABLE
                                       PVLOTP         22   NMODE        AUTO
 50% -                                 PVLLTP         12   PNTFORM      FULL
                                                           PVRAW     53.7764
 25% -

  0% -

       AI_ST_CM
       TRF
       FBCM-EU  CM TYPE  FBCM
         FBCM   BLK TAG
                                       RANGE LIMITS
             0  PRIMMOD ------         PVEXEUHI  ------    ALG TYPE AI
                CONTCUT  OFF           PVEUHI        100   BLKODIDX   257.00
            54  PT TYPE  CMNIM         PVEULO          0   TBODIDX    430.00
                LCN NODE 47            PVEXEULO  ------    PECM NUM 119
                PROC NET 14                                TB TYPE  PRESBAS
                UCN NODE 39
          AUTO  DEV TYPE HPM
                MOD NUM  32
                MOD TYPE FBUS
                SLOT NUM 001
```

### *PID point detail display*

The following figure is an example of the first page of the FBCM PID point detail display.

```
                                                          10 Aug 99 13:44:28   1
                                                   NETWRK VIEW <>
PID_ST_CMTR PID ST3000                 E4 R600 FIELDBUS &I14 HP [FIRST    PAGE]
F                 PVAUTO    ------       ALARM LIMITS         POINT DATA
100% -  . . . .
          _[]  |                         PVHHTP          92   PTEXECST   ACTIVE
 75% -      |  |                         PVHITP          82   ALENBST    ENABLE
                                         PVLOTP          22   NMODE        RCAS
 50% -      |  |                         PVLLTP          12   PNTFORM      FULL
                                         DEVHITP       20.0
 25% -      |  |                         DEVLOTP      -20.0

  0% -     _|  |_
              HP
        PID_ST_C
        MTRF
        FBCM_EU    CM TYPE  FBCM
        FBCM_KEY   BLK TAG
                                         RANGE LIMITS
SP            87   PRIMMOD ------        PVEUHI         100   ALG TYPE PID
                   CONTCUT  OFF          PVEULO           0   BLKODIDX   300.00
PV            91   PT TYPE  CMNIM        CVEUHI     100.000   TBODIDX    430.00
                   LCN NODE 47           CVEULO     0.00000   PECM NUM 119
OP%         87.2   PROC NET 14                                TB TYPE  NOTCNFG
                   UCN NODE 39
           RCAS    DEV TYPE HPM
                   MOD NUM  32
                   MOD TYPE FBUS
                   SLOT NUM 004
```

### *AO point detail display*

The following figure is an example of the first page of the FBCM Analog Output point detail display.

```
                                                                  10 Aug 99 15:07:12   1
                                                   NETWRK VIEW <>
AO_LX_CMTRF  AO LX1400                    E4 R600 FIELDBUS &I14 HP [FIRST    PAGE]
                     PVAUTO    0.00000     ALARM LIMITS          POINT DATA
100% -   - - - -
                                                                 PTEXECST   ACTIVE
 75% -                                                           ALENBST    ENABLE
                                                                 NMODE        AUTO
 50% -                                                           PNTFORM      FULL

 25% -
                 |
  0% -           |

        AO_LX_CM
        TRF
        FBCM-EU      CM TYPE  FBCM
          FBCM       BLK TAG
                                          RANGE LIMITS
SP                   PRIMMOD ------                              ALG TYPE AO
                     CONTCUT  OFF                                BLKODIDX   257.00
PV                   PT TYPE  CMNIM                              TBODIDX    460.00
                     LCN NODE 47                                 PECM NUM 118
OP%          20.0    PROC NET 14                                 TB TYPE  APOSBAS
                     UCN NODE 39
            CAS      DEV TYPE HPM
                     MOD NUM  32
                     MOD TYPE FBUS
                     SLOT NUM 003
```

**ATTENTION**

The Analog Output point shown in the previous figure also displays the associated PECM point address, the BLK0DIX, TB0OIDX, and TB TYPE. This point will also have TB VIEW pages associated with it. These pages may be reached by selecting the **FIRST PAGE** target and bringing up the menu, which includes the **TB VIEW** target.

### *Change modes on a block page of an FBCM point detail display*

The following figure shows the FF Mode_Blk parameter change ports in a PID block page (FB VIEW Page 1, subpage 1). Modes available will differ by block type. While the port may display all possible modes, all modes may not be permitted; therefore only the permitted modes will be live targets. Note that the block pages use the FF parameters. When accessing the modes on block pages, for the purpose of CL or a display, the mode is **read** from parameter **MODEBLKC** (this parameter is of type 8 character string). The mode is **stored** to the parameter **MODE** (of type enumeration). Always refer to the *PM Family Parameter Reference Dictionary* for access for read/write and restrictions. **The Mode_Blk parameter is not an accessible parameter from TPN/TPS.**

```
                                                          04 May 99 11:37:19   4

LC_701F      THE MASTER IN CONTROL    A1 APM 241                 FB VIEW  PAGE   1
                  Operator Dynamic Data -  ST3000 PID Block          SUBPAGE 1

Mode_Blk  PARAMETER    INDEX VALUE

 OOS      ST_Rev                 33
 Man      Mode_Blk          TARGET   : Auto
                            ACTUAL   : Auto
 ROut                       PERMITTED: OOS, Man, Auto, Cas, RCas, ROut
 RCas                       NORMAL   : Auto
          Block_Err
 Cas
 Auto
          PV                 75.0000
 Normal   SP                 75.0000
          Out                75.0000
          Cas_In             0.00000  # OUT-OF-SERVICE
          Trk_In_D             # OUT-OF-SERVICE
          Trk_Val            0.00000  # OUT-OF-SERV/CN

 ENTER
```

## 8.3 Display Mode Handling

### Mode Management

Fieldbus has eight modes; these operating modes differ somewhat from other TPS operating modes in that FF has the concept of mode attributes: Normal, Target, Permitted and Actual. Each function block, transducer block, and resource block has an FF parameter named MODE_BLK. The MODE_BLK is the parameter displayed on the VIEW pages. **This parameter is not accessible for read/write purposes from TPN/TPS.** When accessing the parameter, reads are from MODEBLKC and writes are to MODE. Additionally, modes have the sense of priority, control and dominance.

**REFERENCE - INTERNAL**

For a definition of the display modes priority control and dominance, refer to HPM Fieldbus Point Display Reference, Display Mode Handling, Mode management in the *TPS Fieldbus Reference* document.

The abbreviations may be up to two or four characters, as space permits. The Priority Order shows the order in which the modes will be serviced. For example, OOS would be serviced before all others.

Control Order is the traditional control engineer's concept of Cascade's being a higher mode of operation than Auto; Auto higher than Manual, etc.

FOUNDATION Fieldbus has special rules for order of dominance. OOS dominates over Man, Man over ROut, ROut dominates over RCas, RCas over Cas, and Cas dominates over Auto. This comes into effect if multiple modes are requested.

### Rotary and Switch Models

For reasons of compatibility with various manufacturers' equipment, the FF specifications provide for two "models" of operation: (1) the "rotary switch" model and (2) the "toggle switch" model. Honeywell has traditionally supported the rotary switch model. For consistent user access, TPN permits entries for the rotary model (one exception noted below). However, since third party devices can access FF devices, if the toggle model forms (multiple targets requested) are ever encountered, the target mode which is dominant will be displayed. Also, illegal combinations (according to the FF specifications) will be ignored as follows:

- If ROut is set, RCas may not be set; (if it is, it will be ignored).
- Auto and Man bits must always be of opposite states. If neither or both of Auto and Man are set and any of ROut, RCas, and Cas are set, Auto will be assumed with Man cleared. If neither or both of Auto and Man are set and none of ROut, RCas, and Cas are set, Man will be assumed with Auto cleared.

The "rotary switch" model means that only one mode can be requested at a time (for example, OOS, Man, Auto, Cas, RCas, ROut). A characteristic of that model is that there is no memory of previous target modes. This is supported by TPN.

The "toggle switch" model means that more than one mode may be requested at a time (for example, Manual Override of Cascade, Manual Override of Remote Cascade, etc.). In order to achieve more consistent usage with existing behavior, TPN provides support for this model in only two instances: (1) the Cas mode may be requested at the same time that the RCas mode is requested and (2) the Cas mode may be requested at the same time that the ROut mode is requested. This permits updating the block's setpoint if the "SP Track Retained Target" option is selected in the CONTROL_OPTS parameter and the block is in either the IMan, LO, Man, or ROut mode.

### Configuration Options

Since this is a configuration option, as opposed to an operator selection option, an FBCM-resident parameter, RETCAS, indicates whether the Cas target should be set (or

not) automatically (by the FBUS IOP) every time the operator enters either RCas or ROut as the requested target mode or either of those modes are the “normal” mode

### *Display modes*

Additionally, at configuration time, you can choose to change the description of ROut or RCas modes to be Cas or BCas on displays using (MODE and MODEBKLC parameters) such as the group and detail displays. An FBCM-resident parameter, MODEDOPT, controls the mode display option.

**REFERENCE - INTERNAL**

For a detailed listing of the display mode options, refer to HPM Fieldbus Point Display Reference, Display Mode Handling, Configuration options in the *TPS Fieldbus Reference* document.

### *Normal operating mode*

The **Normal** operating mode is the mode (or combination of modes) to which the target will be set when the operator presses the **NORMAL** key. The normal operating mode can never be OOS (out of service) or LO (Local Override).

**REFERENCE - INTERNAL**

For more information regarding the normal operating mode, refer to HPM Fieldbus Point Display Reference, Display Mode Handling, Configuration options in the *TPS Fieldbus Reference* document.

## Target Mode Examples

Should a mode be requested, and not yet satisfied, the target mode is shown in parentheses, and the actual mode is displayed on the left. For example:

- M (C)
- MAN (A)
- CAS (RC)
- LO (A)
- AUTO (C)

The following lists the abbreviations used to represent the target modes when they have been requested, but not yet satisfied.

- (OS) = OOS
- (LO) = LO
- (A) = AUTO
- (RC) = RCAS
- (IM) = IMAN
- (M) = MAN
- (C) = CAS
- (RO) = ROUT

IMan and LO are not legal target modes.

- Actual mode is determined by the block in reaction to the requested mode (and other conditions).
- Target mode is determined by the operation, with the possible exception of a latch to a lower control mode in a failure or shed condition.
- Permitted modes are the set of modes that in which the particular block can operate.

### Actual/Target Mode Indications

If a mode change has been requested, and if it is one of the permitted modes, and if the mode is satisfied (the actual is the same as the target), the mode will be one of the following: OOS, MAN, AUTO, CAS, RCAS, ROUT.

### CL and Schematic Access of MODE

For display building purposes and CL programming, users should use the TPS parameter, MODE. Refer to the MODE parameter in the *PM Family Parameter Reference Dictionary* for full description and restrictions on use.

### Alarm Handling

Alarm reporting and TPS handling of alarms is discussed in Alarm Priority Functionality.

## 8.4 Status Displays

The following displays are used to determine Fieldbus Network Status

- UCN Status Display
- HPM Status Display
- IOM Detail Display
- Fieldbus Network Status Display
- Fieldbus Device Block Summary
- Fieldbus Network Statistics
- IOP Point Slot Summary
- Fieldbus Device Detail

The calling tree for these displays is shown in the following figure.

## Fieldbus Network Status Display Calling Tree

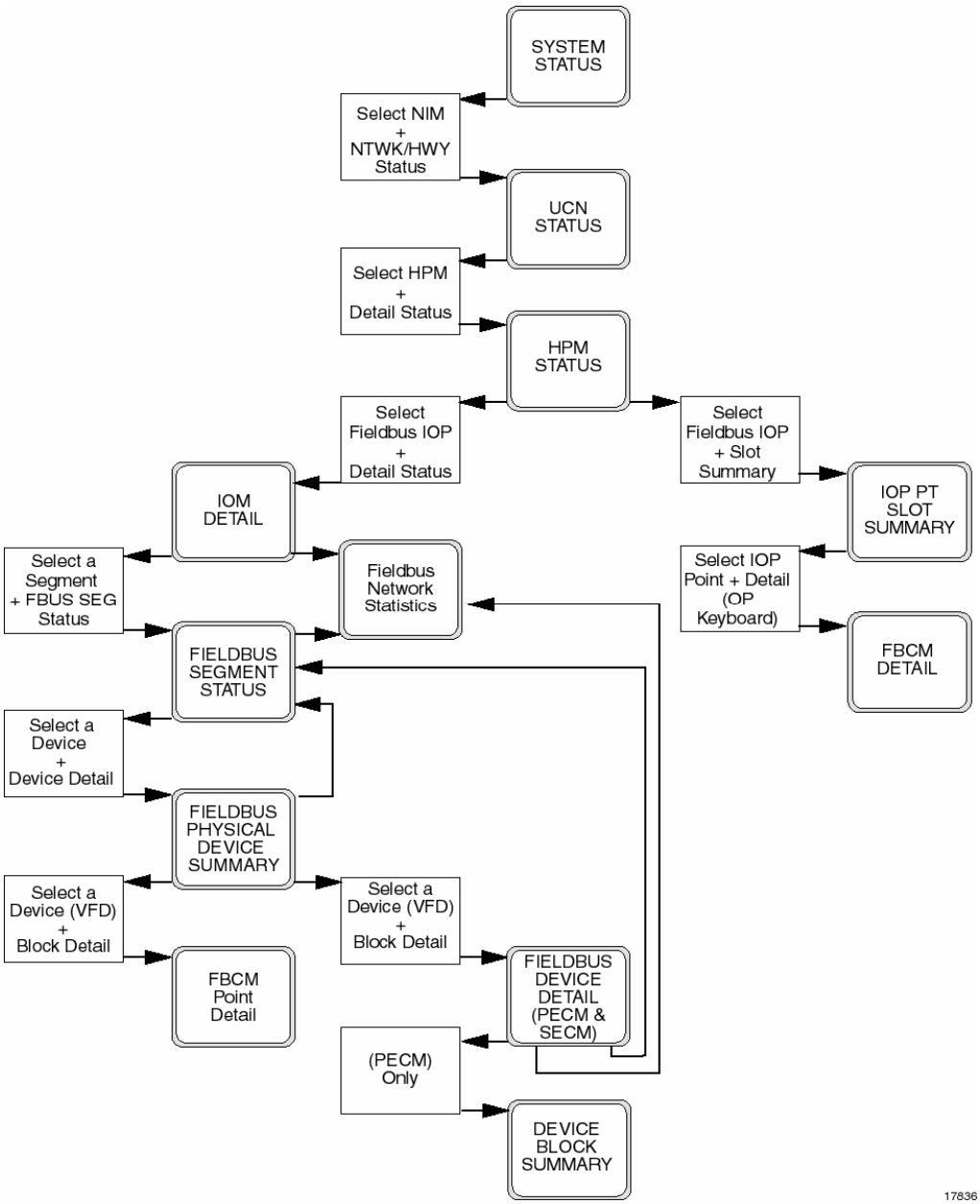

## IOM Detail Display

The IOM Detail Display is reached using the following procedure.

| Step | Action |
|---|---|
| **1** | Calling the System Status Display. |
| **2** | Selecting the applicable Network Interface Module (NM) number and netwk/hwy status target. |
| **3** | Selecting the applicable HPM Number and detail status targets. (brings up the HPM Status Display) |
| **4** | Selecting the FBUS IOP (as shown in the HPM Status Display in the following figure). |
| **5** | The IOM Detail Display appears, as shown in the following figure. |

**IO Module Display for a Fieldbus IOP**

```
MAKE SELECTION                                          04 May 99 01:48:10   1


            FBUS     Non-redundant ........ SF
 UCN  14  HPM  39  MODULE  37 PHYS ADDR 231 FILE   7 CARD   8
 STS SOFTFAIL ACTUAL TYPE FBUS     FTA Connect CONN_A
 Status:
 HARDWARE REV 50  FIRMWARE REV 3.9   LAST HARD FAILURE SPARE053
 DESCRIPTION: FBUS H1
 ACTIVE CABLE  CHANNELB CHN A ERR :     0 CHN A SIL :     0    RESET MODULE
 LAST COMM ERR NONE     CHN B ERR :     0 CHN B SIL :     0    COMM ERRORS

 FTA PRESENT                 NO STANDBY MANUAL
 COLD POWERUP LAST EXECUTED  NO SWITCHED ACTIVE

   Box Soft        Slot Soft        Slots with Soft
   Failures         Failures            Failures


 FB NET 1  SEG 1                  Refresh  PI Load  Fbus Seg  Device
 FB NET 2  SEG 1                  DisPlay   Info    Status   Detail
           SEG
           SEG
```

## HPM/Fieldbus Checkpointing (Saving the Data)

The data owner for fieldbus points is the NIM and the checkpoint file is stored on the History Module. Fieldbus IOP point data save/restore is accessed through the System

Status Display. Select targets NIM and NTWK/HWY STATUS. This brings up the UCN Status display. Select the HPM in which the fieldbus IOP resides and pick the target DETAIL STATUS. This brings up the HPM Status display, from where the program and data save/restore can be invoked. For R6XX a new file type is added to the UCN checkpoints:

FXXNNYYM.CP

Where:

- XX= UCN number [1 . . . 20]
- NN = HPM address odd number [1 . . . 63]
- YY = FBUS IOP [1 . . . 40]
- M = Checkpoint last saved 1, 2

**ATTENTION**

Checkpointing the Fieldbus IOP does **not** save the device data that has been downloaded to the device. Saving the device data is a Save/Restore function.

## FB IOP Personality Upgrade

The fieldbus IOP is loaded before shipment and must be reloaded as necessary when new releases are distributed. If it is necessary to reload this personality, use the HPM Status Display.

### HPM Status Display with Fieldbus IOP Personality Reload

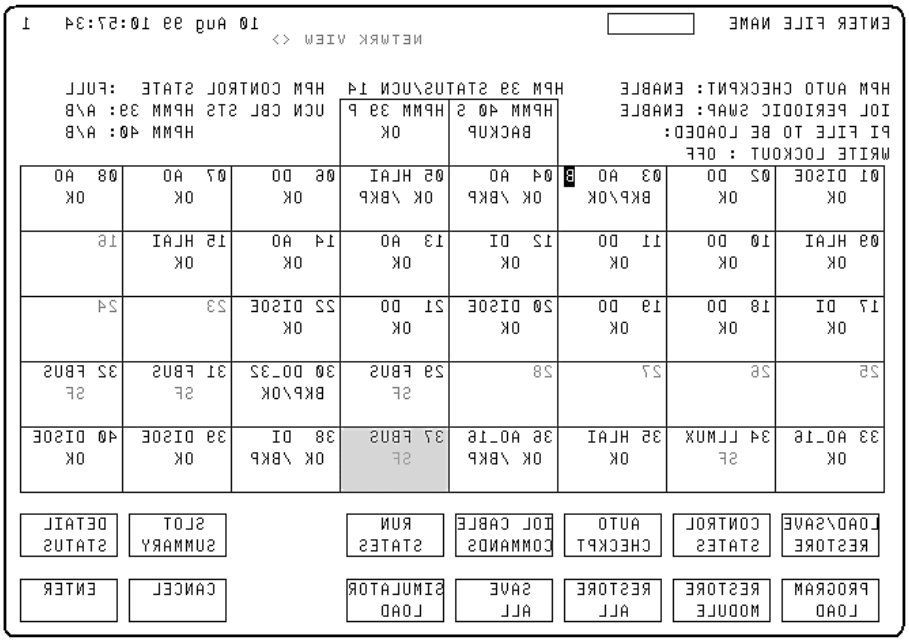


To load new Fieldbus IOP personality, use the following procedure.

| Step | Action |
|---|---|
| **1** | Select the IO Module to be reloaded, as shown in the previous figure. (In our example, it is module 37 FBUS). |
| **2** | Select the **LOAD/SAVE RESTORE** target. |
| **3** | Select the **PROGRAM LOAD** target. |
| **4** | The **PI FILE TO BE LOADED** appears on the upper left side of the page. |
| **5** | A port opens at the top of the page. |
| **6** | Enter the name of the file (stored on the history module or removable media). |

In addition to the HPM Status Display, an IOP Personality Image Load Information display is supplied. The IOP PI Loading Information display gives the user information

concerning the latest file loaded, its name, and other pertinent information. It can be reached through the IOM Detail Display.

Refer to the following figure.

**IOP PI Loading Information Display**

```
                                                    04 May 99 01:40:49   1



                    IOP PI LOADING INFORMATION DISPLAY

                      UCN 14      HPM 39      IOM 37


    PERSONALITY LOCK: C000 0000 0000 0001
CURRENT PI FILE NAME: fbio6039
   NEXT PI FILE NAME:

      STATUS: SUCCESS           LOADING NODE: 0      PACKET NUMBER:  4584

      PERSONALITY INFORMATION
   IDENTIFIER: Field Bus IOP
          KEY: 0000 0000 0000 0001
      VERSION: 3
     REVISION: 9
```

The fieldbus-IOP is checkpointed in the same manner as any other IOP. It can be saved and/or restored by reloading the HPM or by selecting singularly the FB-IOPs and using the save/restore function.

## Segment Status Display Pages

The segment status display shows the devices configured on the network, their device addresses and their individual states, as shown in the following figure.

### Fieldbus Segment Status Display

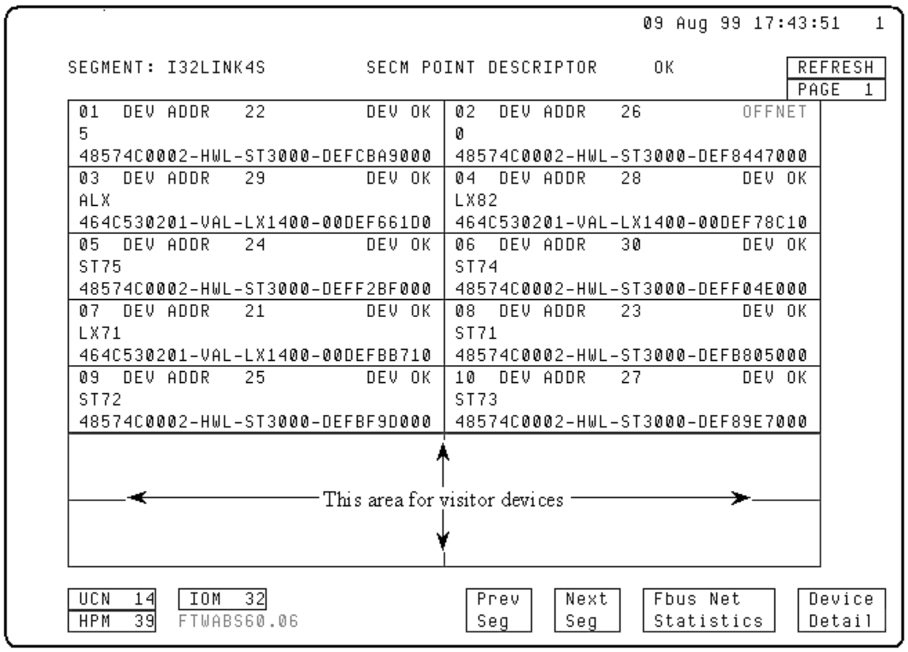


The upper part of page 1 of the Fieldbus Segment Status (shown in the previous figure) shows the ten devices configured (through TPS Builder). The lower section of the display is for "visitor" devices. None are shown here, but if one were to be detected, the probe node would have detected it and information would be displayed here.

Page two of the Segment Status display is shown in the following figure. If devices, not configured through TPS Builder were detected by the probe node function, the detected devices appear here.

## Segment Status, Page 2

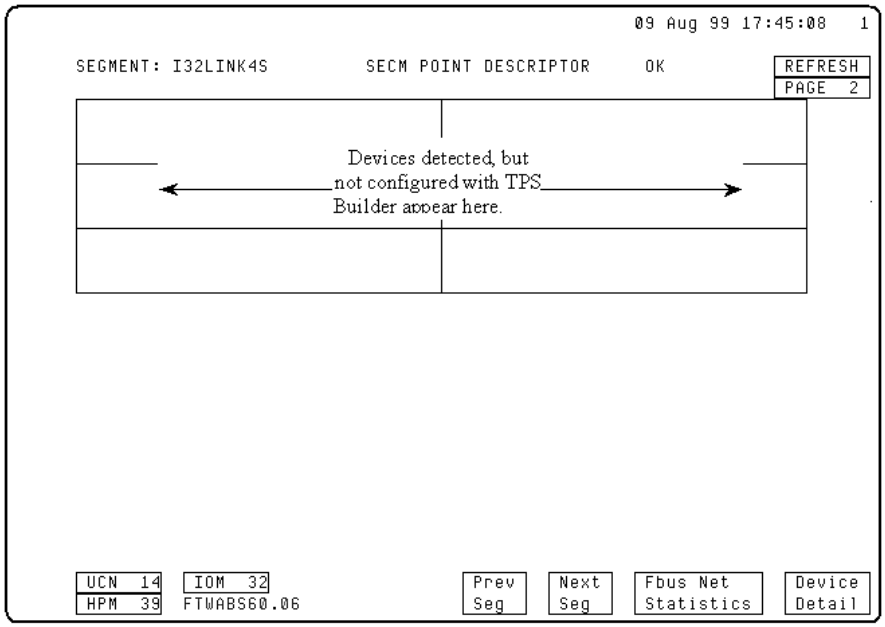

## Network Statistics Display

The Fieldbus Network Statistics shows the number of segments (networks or links) configured on an individual FBIOP, the UCN, HPM, and IOM module numbers. Up to four segments can be configured as shown in the following figure.

**Fieldbus Network Statistics**

```
                                                    12 Aug 99 13:29:07   1

                          UCN  14   HPM  39   IOM  32
                                                                REFRESH
FB NET 1  SEG 1
FB NET 2  SEG 1
FB NET 3  SEG 1
FB NET 4  SEG 1

          This page cannot be filled in any further since statistical
          parameters have not yet been defined.

                                                              Fbus Seg
                                                               Status
```

## Additional Information for Fieldbus Network and Maintenance Displays

For additional information on the Fieldbus Network Displays and Maintenance Displays, see the Process Operations Manual and the *Fieldbus Planning, Installation and Service* manual.

### *Field Device Save Restore*

Device Configuration is accessed and built through TPS Builder; the device data is therefore stored in the TPS Builder Repository and must be restored from this source. Device description upload from the device is supported.

### *Field Device Uploading*

Device uploading will be from a GUS with TPS Builder. Data is stored in the TPS Builder repository.

### *Field Device Downloading/Replacement*

Downloading to a device is supported through TPS Builder. Should a device mismatch occur, it could be the result of a name, address assignment, or revision.

### *Field Device Verification*

Prior to accepting the request to download an FF field device, the device must be verified to be the correct device. Parameters indicating the manufacturer ID, model number, and revision ID will be checked against the currently connected device. If the verification match fails, the user will be notified and suggested to abort (option to continue) the operation.

## Event and Alarm Journalizing and Historizing

Refer to the Alarm Priority Functionality section of this document for the additional information on the journalizing of events and alarms. Events that are supported by TPN for the HPM are supported for fieldbus.

### *Changes to Static Data*

Changes to static data are reported for FBAP. If the change is to a TPS Networks entity, a process event is to be used. The source of the change may have been TPS networks, or other, such as via a hand-held communicator or field configuration tool. Depending upon how the user configures the system, the static data may, or may not have been bound to a TPS networks projected parameter.

### *Configuration Changes*

Any field device reported indication that a configuration change to its static data has occurred is journaled. If the change is to a virtual device, a system event is to be used. The TPS Networks journal of a configuration change will include a timestamp. If the change is to a TPS Networks entity, a process event is used.

### *Parameter Changes*

For single parameter changes, the TPS Networks journal of a configuration change will identify the parameter changed. If the change is to a TPS Networks entity, a process event is used.

For multiple parameter changes, if the field device cannot distinguish the complement of parameters changed, the journal will indicate that more than one parameter has changed. If the change is to a TPS Networks entity, a process event is to be used.

Parameter data changes made by operators from a universal station will be journaled as an operator change. These journal entries will identify the station number, and include a timestamp as well as identify the parameter changed.

### *Historization*

Any FBCM process point parameters with volatile data can be historized. Refer to the Process Operations Manual.manual for instructions for historical data storage and retrieval.

### *Trends*

Trends of fieldbus FBCM process point variables PV, SP and OP are available, providing the point has been historized. Refer to the Process Operations Manual manual for instructions for trending these variables.

# 9. Display Indications of FF Status Byte

## 9.1 Status Byte and Data Structure Overview

### Status Byte Information

Every variable and some contained fieldbus values have a status byte as an element of the structure; therefore, every process variable has this property. The three main fields in the status by are:

- Quality of data
- Limit conditions
- Sub-status

If the data is bad or uncertain, the sub-status contains the reason. If the quality of the data is good and the output is used in control (as in a PID's OUT), the sub-status is used as a control hand-shaking indication. If the quality of the data is good and the output is not used in control (as in an AI's OUT), the sub-status is used to indicate worst-case alarm situations within the block.

### Data Structures

Every connectable input and output supports the status byte. It is part of the three following data structures.

- DS65 — Floating Point, value and status
- DS66 — Discrete, value and status
- DS67 — Bitstring, value and status

Status is used to indicate

- Data Quality (Usability)
- Data Failure Cause
- Data Degradation Cause
- Limit Conditions (Upward & Downward)
- Cascade Control Initialization, Rejection (Upstream Block Class Indication)
- Fault-State Initiation, Indication (Upstream Block Class Indication)

- Local-Override Indication
- Worst-Case Alarm Indication (Upstream Block Class Indication)

**REFERENCE - INTERNAL**

For a more information regarding:

- the data structures and coding convention, refer to the topics under FF Status Byte Display Reference, FF Status Byte Data Structure in the *TPS Fieldbus Reference* document
- the data structures, refer to the *PM Family Parameter Reference Dictionary*.

### Interpreting the status byte

**REFERENCE - INTERNAL**

For detailed information regarding how to interpret the status byte, refer to the topics under FF Status Byte Display Reference, FF Status Byte Data Structure in the *TPS Fieldbus Reference* document

## 9.2 Group and Detail Display Indicators

### Setpoint status indicators

**REFERENCE - INTERNAL**

For detailed information regarding how to interpret the group and detail setpoint status indicator, refer to the topics under FF Status Byte Display Reference, Group and Detail Display Indicators in the *TPS Fieldbus Reference* document.

### PV status indicators

**REFERENCE - INTERNAL**

For detailed information regarding how to interpret the group and detail PV status indicator, refer to the topics under FF Status Byte Display Reference, Group and Detail Display Indicators in the *TPS Fieldbus Reference* document.

### Output status indicators

**REFERENCE - INTERNAL**

For detailed information regarding how to interpret the group and detail output status indicator, refer to the topics under FF Status Byte Display Reference, Group and Detail Display Indicators in the *TPS Fieldbus Reference* document.

### FF status byte indicators

**REFERENCE - INTERNAL**

Refer to the following topics under FF Status Byte Display Reference, Group and Detail Display Indicators in the *TPS Fieldbus Reference* document.for detailed information regarding how to interpret the group and detail indicators:

- FF status byte indicators when Quality is BAD
- FF status byte indicators when Quality is UNCERTAIN
- FF status byte indicators when Quality is GOOD with No Cascade
- FF status byte indicators when Quality is GOOD with Cascade

### FF $FBSTATS enumeration

**REFERENCE - INTERNAL**

Refer to the following topics under FF Status Byte Display Reference, FF $FBSTATS Enumeration in the *TPS Fieldbus Reference* document for detailed information regarding enumeration:

- FBSTATS enumeration when the quality code is zero
- $FBSTATS enumeration when the quality code is one
- $FBSTATS enumeration when the quality code is two
- $FBSTATS enumeration when the quality code is three

# Reader Comments

**Fax Transmittal** **Fax No.: (602) 313-4212**

**Reader Comments**

To: Information Development

From: Name Date:

Title:

Company:

Address:

City: State: Zip:

Telephone: Fax:

**TPS Fieldbus Theory**, **FB90-630**

Release **630**, **12/01**

Comments:

You may also call 800-343-0228 (available in the 48 contiguous states) or write to:

Honeywell
Industrial Automation and Control
16404 North Black Canyon Highway
Phoenix, AZ 85053

Knowledge Building Tools

TotalPlant

Honeywell

Honeywell
Industrial Automation and Control
16404 North Black Canyon Highway
Phoenix, AZ  85053