Wheel Assembly

Specifications

In designing the wheel assembly, a methodical approach was taken. A set of necessary specifications and expectations was outlined to develop, test, and compare design iterations of the wheel assembly.

Functional Requirements	● Ability to support the weight of the rower ● Maximum deflection in a non-operating mode (not driving) doesn't exceed 3 mm ● Stresses in a non-operating mode (not driving) are uniformly distributed along the bottom of the wheel, accounting for the circular shape ● There are no random spikes of stress distribution at the bottom of the wheel ● Lightweight (less than 300 grams) ● Printing time doesn't exceed 12 hours ● Aesthetically pleasing
Strategy	Working wheels can hold the weight of the rower, enabling the traverse by employing a series of circular support structures, minimizing the weight and distributing the weight of the load.
Specific Design	Two large wheels: ● Material: TPU, PLA ● Supporting structures: V-formation, triangles, spikes ● Number of repetitions of supporting structures: 12 (Iteration 1), 9 (Iteration 2), 4 (Iteration 3) ● Thickness of walls: 1.2 mm ● Diameter: 7 in (Iteration 1), 8 in (Iterations 2, 3)
ITERATIONS	1. Initial "V-Flex" Design: soft deformable TPU Tires, hard PLA Mount Hub connector, Mount Hub (076-ME-P007). 2. "Triangular Flex" Design: hard PLA, radiating triangular walls, Mount Hub (076-ME-P007). 3. "Spiral Quarterly Flex": hard PLA, spikelike straight supporting walls, Mount Hub (076-ME-P007).
Analysis	Measure deflection and stress distribution
References	ENGS 76 Homework Assignment #1, ENGS 33 Course Materials, MatWeb Material Property Data Sheet,
Risks	Unable to support the weight of the rower, exacerbating traverse efforts. Improper design might lead to a breakage and/or buckling in driving mode. Other risks include: tipping over rocks, being unable to drive around obstacles.

Counter Measures	Adjust wheel design for more rigidity. Implement some room for potential increase in the mass of the body weight (as items are being picked up).
Further Modifications	Further adjustments might include number of supporting members, thickness of supporting members. Potential alterations might include integration of TPU for tiring to prevent slipping.

Iteration No. 1 *"V-Flex"*

Previous design iteration V-Flex"" consisted of 3D-printed TPU "soft" wheels. The wheels would then be able to morph into the shape of the terrain, providing a stronger grip on the surface and allowing the rower to propel itself forward. Nonetheless, the deformation was found to be too significant, compromising the support of the rower's weight. Under the load of 0.5 kg, the total deflection added to around 6.3 cm, which results in a 64% compression of the overall structure.

Wheels must foremost support the weight of the rower, enabling the traverse as a whole. As of now, this design can't be implemented into the rower, since the weight of the machine is an unknown variable at this stage. Therefore, a reasonable step to move forward was to produce a design that achieves the aforementioned task. "V-Flex" concept is not completely discarded but deprioritized until further developments and testing.

Iteration No. 2 *"Triangular Flex"*

This wheel iteration features a complex geometric design, incorporating repeating spikelike triangular walls that reinforce the overall structure (see figure below). Wheel consists of a center and two concentric extruded circles, connected by triangular walls. Sharp edges are filled in, using a filet tool. The center features a cutout for the Mount Hub (076-ME-P007) and a future shaft.

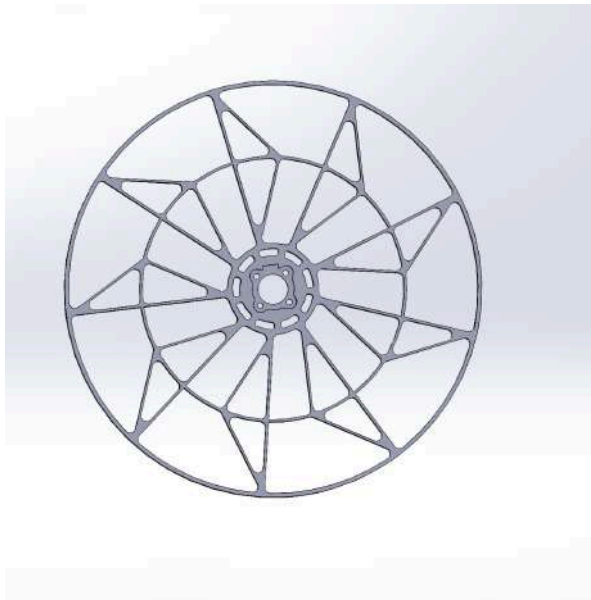

To execute Finite Element Analysis, average values of material and mechanical properties of PLA were adapted from the "MatWeb Material Property Data" resource (please refer to the table below for reference).

Elastic Modulus	$30.4579 \cdot 10^6\ psi$
Poisson's Ratio	0.28
Mass Density	$0.281793\ lb/in^3$
Yield Strength	$31.9945 \cdot 10^3\ psi$
Tensile Strength	$57.9899 \cdot 10^3\ psi$

Table "PLA Properties"

To design this analysis, a wheel design was grounded onto an arbitrary metal plate, using a tangential relationship, and a Mount Hub (076-ME-P007) along with an arbitrary 2-inch shaft were inserted to complete the assembly. A uniform load of 10 N was applied to the shaft, perpendicularly to the ground. The FEA (see figure below) showed a maximum deflection value of 6.11e-01 mm and a maximum stress value of 3.916e+6 N/m^2. .

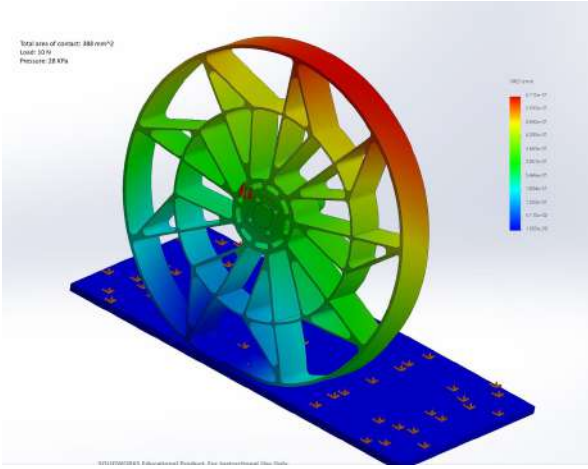

Deflection FEA

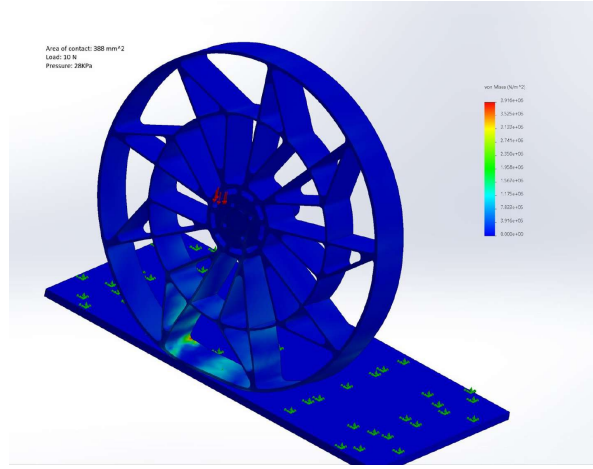

Stress FEA

Iteration No. 3 *"Spiral Quarterly Flex"*

This iteration of wheel design features a center hub and two concentric extruded circles that have a series of large, evenly spaced cutouts, congregated into a symmetrical circular shape. Spikelike cutouts radiate from the center, forming multiple curved sections and serving as thin supporting structures between the cutouts, reinforcing the wheel. The center has an opening for the provided metal Hub Mount (076-ME-P007) and a shaft.

An FEA was executed under the same loading and boundary conditions and using the same material properties as in the previous iteration. This FEA showed a maximum deflection of 1.380e-01 mm and a maximum stress value of 9.185e+05 N/m^2.

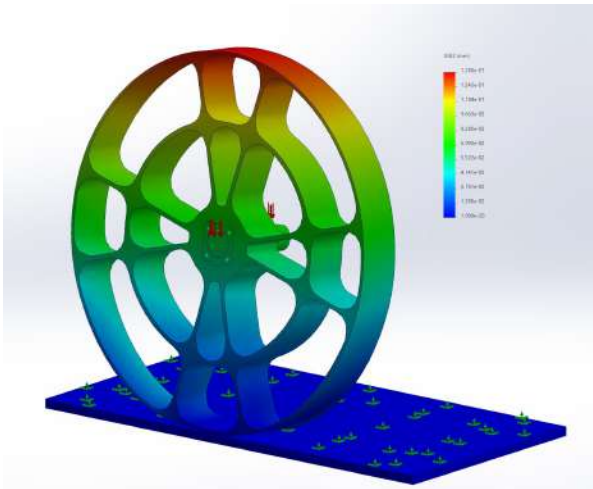

Deflection FEA

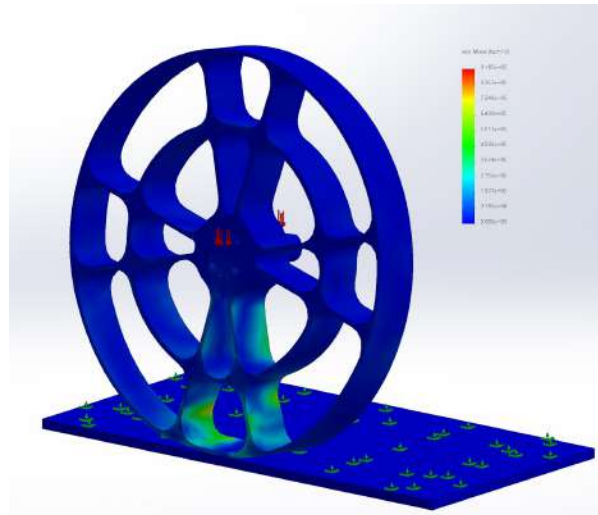

Stress FEA

Comparative Study of Wheel Designs

All 3 design iterations were compared with each other based on them meeting outlined specifications.

Specification	Iterations			Choice
	1	2	3	
Ability to support the weight of the rower	No	Yes	Yes	2 and 3
Maximum deflection in a non-operating mode doesn't exceed 3 mm	No	Yes	Yes	2 and 3
Stresses in a non-operating mode are uniformly distributed	Yes	Somewhat 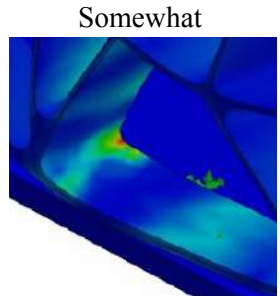	Yes	1 and 3

There are no random spikes of stress distribution at the bottom of the wheel	Satisfied	Non satisfied	Satisfied	1 and 3
Lightweight (less than 300 grams)	Yes (the lightest)	Yes	Yes	1
Printing time doesn't exceed 12 hours	Yes (11.8 hours)	Yes (7 hours)	Yes (4.8 hours)	3
Aesthetically pleasing	Yes	Yes	Yes	Any

Weighing each design integration by its ability to satisfy a specification, the choice came down to between Iterations 2 and 3.

Standard	Iteration 2	Iteration 3	Conclusion	Choice
1. Maximum Deflection	6.11e-01 mm	1.380e-01 mm	Iteration 3 has a 4.43 smaller deflection (77.4% less deflection from Iteration 2)	Iteration 3
2. Maximum Stress	3.916e+6 N/m^2	9.185e+05 N/m^2	Iteration 3 has a 4.23 smaller maximum stress (76.5% smaller maximum stress from Iteration 2)	Iteration 3
3. Stress distribution	Somewhat uniform	Uniform	Iteration 3 has a more uniform stress distributed	Iteration 3
4. Ability to support the weight of the rower (static)	Yes	Yes	Both are able to support the total weight	Both
5. Breakage during robust driving	More likely	Less likely	Iteration 3 carries less risks due to uniform stress distributed	Iteration 3
6. Can we easily modify and/or scale design	Yes	Yes	Both are easily modifiable	Both
Print time (0.4 nozzle, 10% infill)	7 hours	4.8 hours	Iteration 3 takes less time to print	Iteration 3

Iteration 3 "Spiral Quarterly Flex" was prioritized in manufacturing and chosen for further experimental testing.

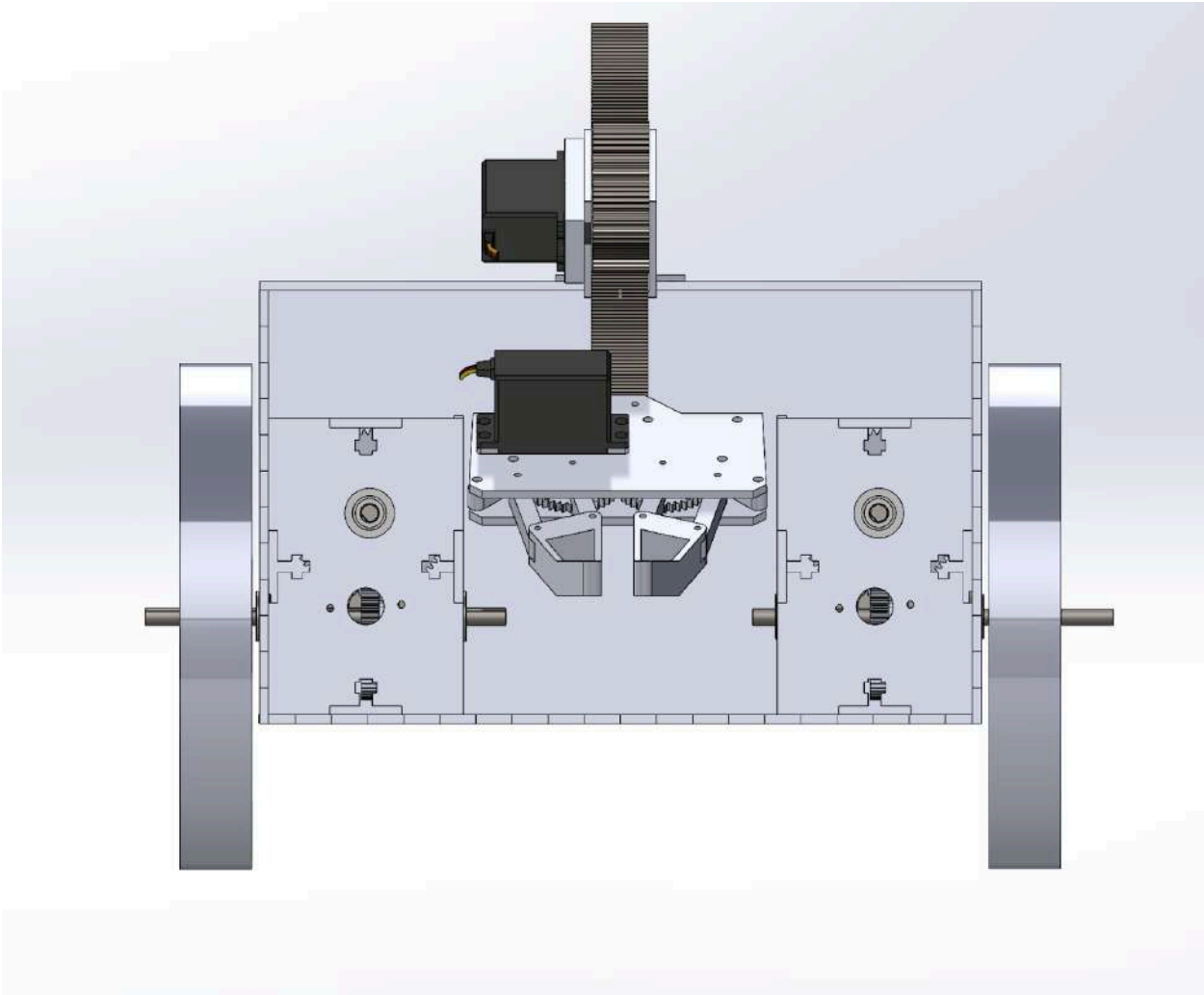

Front view of the assembled Rover, as of Oct 21, 2024

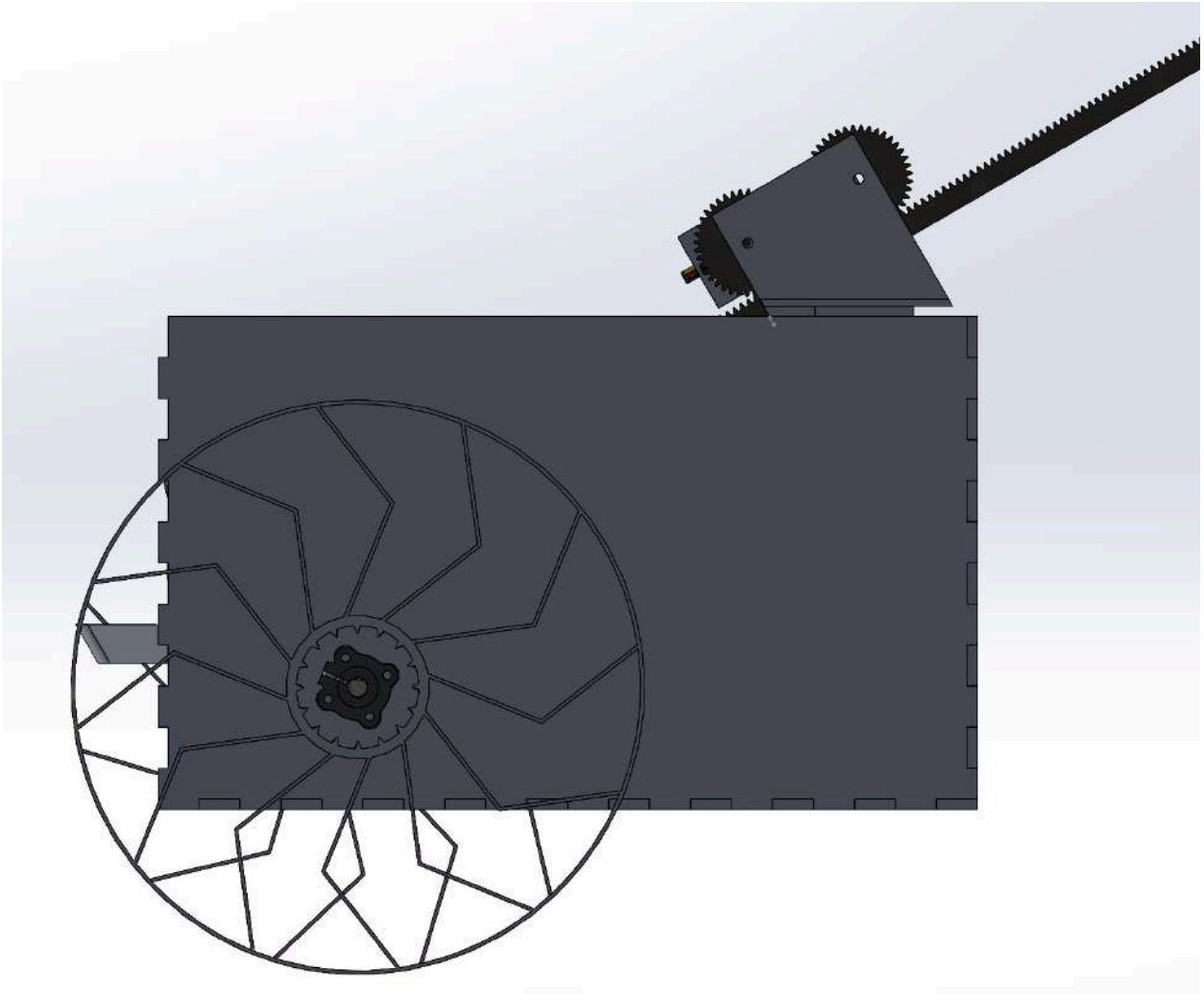

Side view of the assembled Rover, as of Oct 21, 2024

Bill of Materials:

Gripper

ITEM #	Part Number	Description	Material	Supplier	Supplier Part #	QTY
1	076-EL-P006	Continuous Rotation Servo	N/A	Hitec	HSR-1425CR	1
2	076-ME-P010	Servo Spur Gear 20 tooth	White Plastic	Servocity	RSA32-2HS-20	1
3		Laser-cut Base Plate	Plywood			2
4		3D-Printed Plate Support	PLA			2
5		3D-Printed Plate Support	PLA			2
6		Gripper Claw	PLA			2
7		3D-Printed Spur Gear with Linkage	PLA			
8		Hex Lock Nuts 6-32			52592706	8
9		Set screws 6-32 x 1/4"			5546023	8

Wheel (2x)

ITEM #	Part Number	Description	Material	Supplier	Supplier Part #	QTY
1		3D Printed Wheel	PLA			
3	076-ME-P007	Hub Mount 0.25in Bore	Aluminum	Servocity	545588	1

Gearbox (2x)

ITEM #	Part Number	Description	Material	Supplier	Supplier Part #	QTY
1	076-ME-P006	Hub Gear 72 tooth 0.5in bore	Aluminum	Servocity	615198	2
2		D-shaft 1/4" Diameter 5"	Servo City		634094	2
3	076-ME-P007	Hub Mount 0.25in Bore	Aluminum	Servocity	545588	2
4	076-ME-P003	Spur Gear 10 tooth 0.125in bore	Alloy Steel	Servocity	KPL32-32-10	1
5	076-EL-P003	Tamiya 540 Stock Motor	N/A	Mabuchi	RS-540SH	1
6	076-ME-P025	Flanged Ball Bearings	Steel	VXB.com	FR4ZZ	4
7		Customized Worm Gear	Aluminum			
8		Laser box	Plywood			
9	076-ME-P013	Shaft Collar 0.25in Bore	Carbon Steel	McMaster	6432K12	4

Gripper Extension

ITEM #	Part Number	Description	Material	Supplier	Supplier Part #	QTY
1	076-ME-P012	Rack 12in	Alloy Steel	MSC	35442706	1
2	076-EL-P006	Continuous Rotation Servo	N/A	Hitec	HSR-1425CR	1
3		3D-Printed Spur Gear	PLA			2
4		Extension Hub	PLA			1

Rover Housing

ITEM #	Part Number	Description	Material	Supplier	Supplier Part #	QTY
1		Laser box	Plywood			

CAD Attributions

Gearbox: Karl, CP, Gabby, Trevor
Chassis: CP, Karl
Wheel: Nathan, Trevor
Wheel Hub: Nathan
Arm: Gabby, Karl
Gripper: Gabby, Karl, Trevor, CP, Nathan

Appendix: *FRDPAARC Tab*

Functional Requirements	Strategy	Specific Designs	ITERATIONS	Analysis	References	Risks	Counter Measures	Further Modifications
Driveable through all terrains- **Wheel to gear box connection**	- working wheels that can hold the weight of chasis, working gear box that allows skid stearing, stability to go over rocks without flipping over	2 Large wheels driving car	1. First TPU printed wheel 2. Changed wheel design with 2 levels	measure deflection, wheel space	HW #1, gear box lab	Tips over rocks, can't drive around obstacles, angle of uphill climb too large for wheels/gear box to drive up, wheels too flimsy to hold weight	change wheel design for more rigidity,	add an inner section of more rigid plastic and then the outer inch would be a softer platsic to add more complienace and traction when ascending and decending
	Gear Box that rotates a shaft	Worm Gear Box with t least 400x gear reduction, good fit in the rover, not too much losses from friction	1. 3 iterations of worm gear from lathe, 3 gear box structure designs	Calculate Torque, Dynamic Analysis: conservation of linear and angular momentum to find the desired speed with load & torque applied.	Gear Box Lab, HW #1 & #2	too much friction or skipping in gears, won't have skid steering we want	We have made 3 different gearbox boxes to make sure we have a correct fitment with optimal contact area between the gears and as little friction as possible. when running ass a little oil potentially to help the gears run better	A lot of tweaking with the orientation of the components in the gearbox to minimize the footprint and keep a low center of gravity since the motors are the heavier parts of the whole rover
Pick up batteries, box, and rocks	Gripper can grab items	Parallel Gripper Design	1. Crocodile Gripper 2. parrallel gripper 3. parrallel gripper with refinements 4. parrallel gripper with smaller jaws 5. slimmer parrallel gripper	Using torque applied by motor, moment generated on the gripper and analyze how much weight it could lift with the coefficient of static friction between item and rubber	Gripper sprint	Stalling in motor, gear size misalignment,	many iterations to get the correct gear fitment, in field testing of the gripping efficiency	Create a storage spot for the items where the dropped items will be secure within the chassis
	Gripper angled correctly from height, secured to arm, arm is reliable and can hold weight of gripper and object, easily adjustable and can move to position, secured on to chassis	Gripper and arm subassembly	Many sketches for differnt stragegies but decided to go the simple route and just do a rack gear to have more time for other parts of the rover	Angle from height of chasis, and test movement with servo. for a final iteration need to figure out how big the chassis will need to be to fit the other components and then configure the rack gear length and the procise angle		only one degree of movement	High manuverability for the rover so we do not need more degrees of movement	
All Components fit within chasis and work well, together	Chassis	All Internal?		DRIVE & PRACTICE.	HW #1	Dimensions will be off, have to change arts	Put everything together and make any changes that are needed	