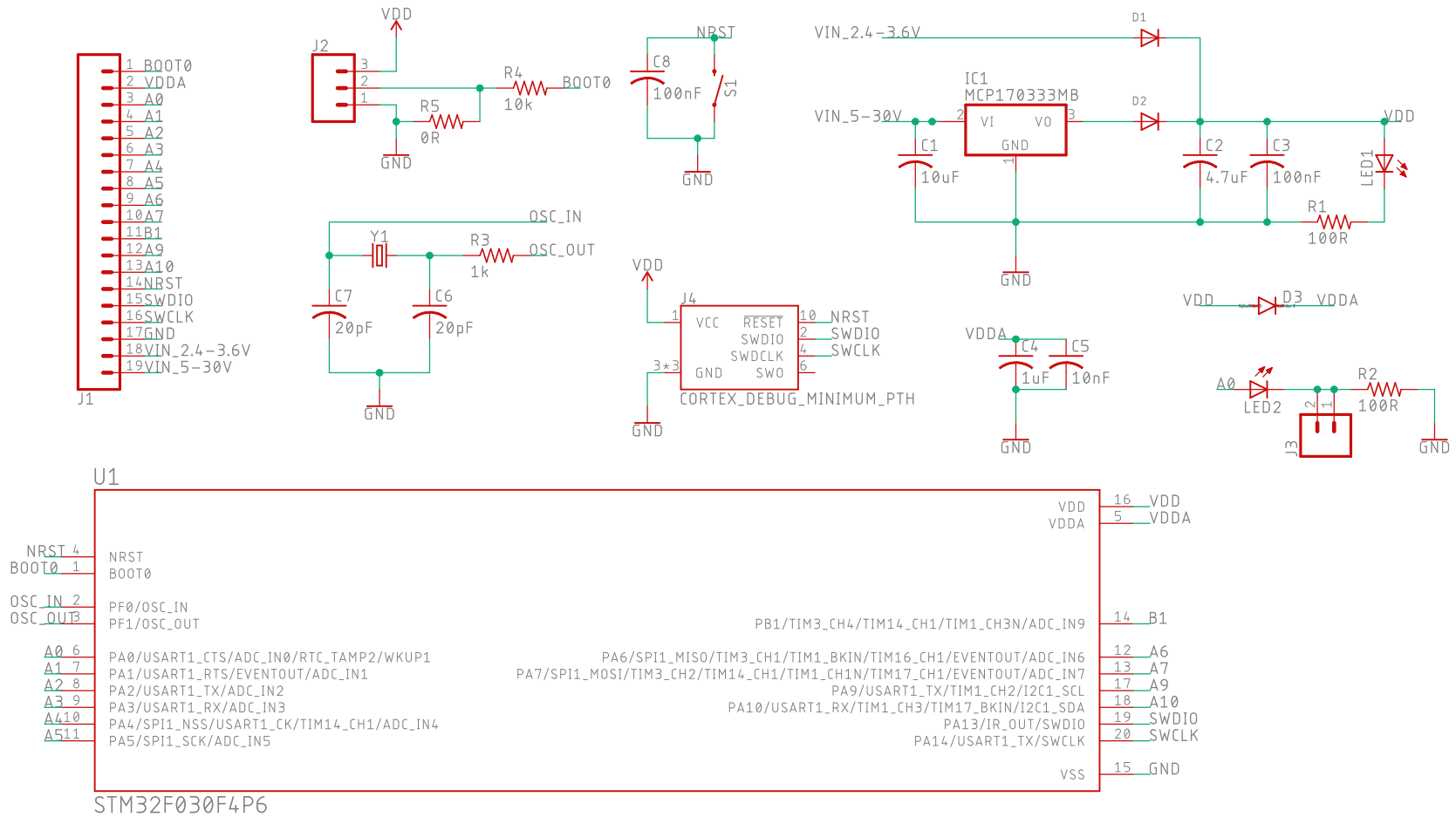

Released under the Creative Commons
Attribution Share-Alike 4.0 License
https://creativecommons.org/licenses/by-sa/4.0/

TITLE: STM32F030F4P6

Design by: Nathan Jones

REV: >REV

Date: 3/12/20 10:25 AM

Sheet: 1/1