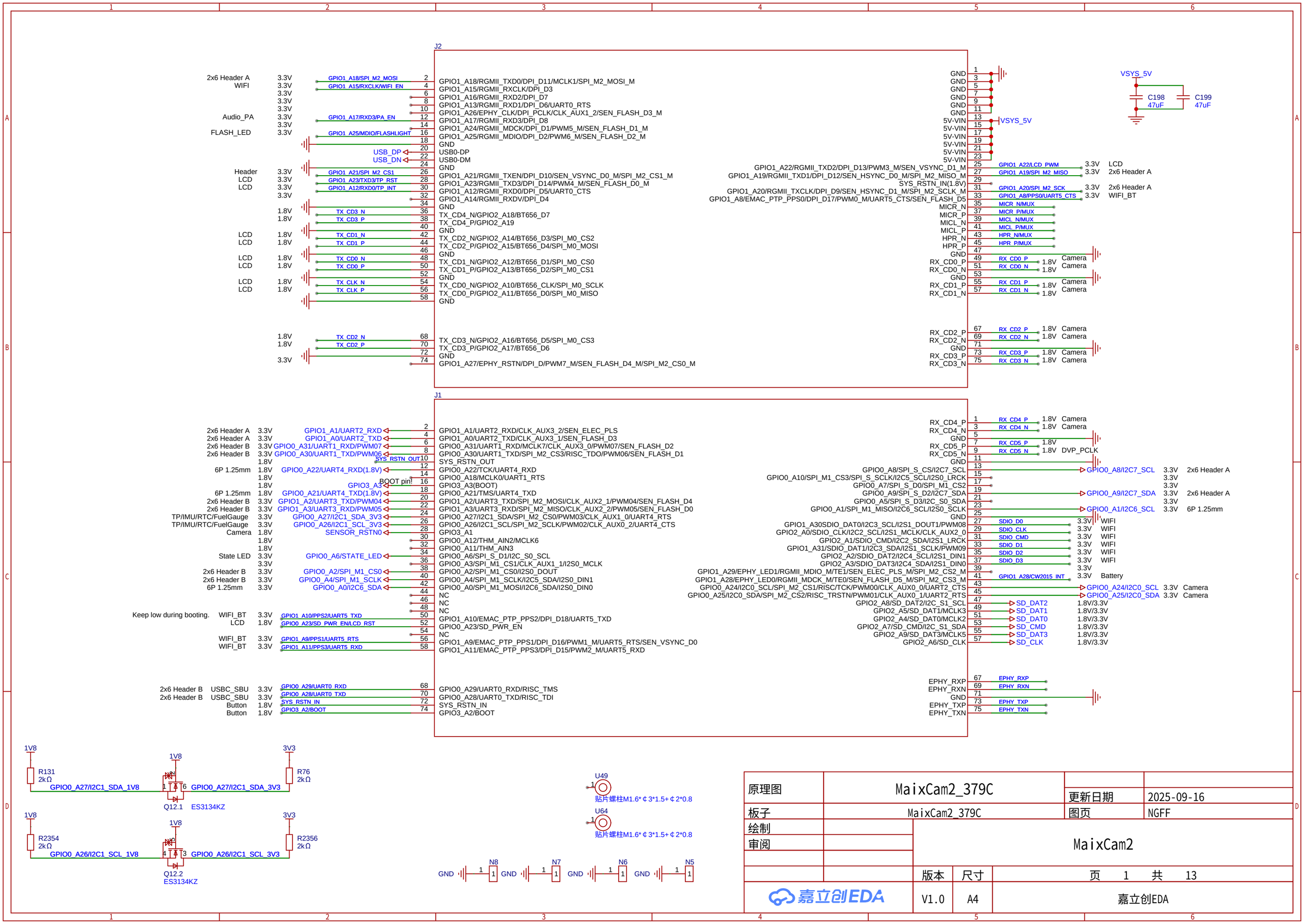
J2
2x6 Header A
WIFI
Audio_PA
FLASH_LED
Header
LCD
GPIO1_A18/RGMII_TXD0/DPI_D11/MCLK1/SPI_M2_MOSI_M
GPIO1_A15/RGMII_RXCLK/DPI_D3
GPIO1_A16/RGMII_RXD2/DPI_D7
GPIO1_A13/RGMII_RXD1/DPI_D6/UART0_RTS
GPIO1_A26/EPHY_CLK/DPI_PCLK/CLK_AUX1_2/SEN_FLASH_D3_M
GPIO1_A17/RGMII_RXD3/DPI_D8
GPIO1_A24/RGMII_MDCK/DPI_D1/PWM5_M/SEN_FLASH_D1_M
GPIO1_A25/RGMII_MDIO/DPI_D2/PWM6_M/SEN_FLASH_D2_M
GND
USB0-DP
USB0-DM
GND
GPIO1_A21/RGMII_TXEN/DPI_D10/SEN_VSYNC_D0_M/SPI_M2_CS1_M
GPIO1_A23/RGMII_TXD3/DPI_D14/PWM4_M/SEN_FLASH_D0_M
GPIO1_A12/RGMII_RXD0/DPI_D5/UART0_CTS
GPIO1_A14/RGMII_RXDV/DPI_D4
GND
TX_CD4_N/GPIO2_A18/BT656_D7
TX_CD4_P/GPIO2_A19
GND
TX_CD2_N/GPIO2_A14/BT656_D3/SPI_M0_CS2
TX_CD2_P/GPIO2_A15/BT656_D4/SPI_M0_MOSI
GND
TX_CD1_N/GPIO2_A12/BT656_D1/SPI_M0_CS0
TX_CD1_P/GPIO2_A13/BT656_D2/SPI_M0_CS1
GND
TX_CD0_N/GPIO2_A10/BT656_CLK/SPI_M0_SCLK
TX_CD0_P/GPIO2_A11/BT656_D0/SPI_M0_MISO
GND
TX_CD3_N/GPIO2_A16/BT656_D5/SPI_M0_CS3
TX_CD3_P/GPIO2_A17/BT656_D6
GND
GPIO1_A27/EPHY_RSTN/DPI_D/PWM7_M/SEN_FLASH_D4_M/SPI_M2_CS0_M
GND
5V-VIN
GPIO1_A22/RGMII_TXD2/DPI_D13/PWM3_M/SEN_VSYNC_D1_M
GPIO1_A19/RGMII_TXD1/DPI_D12/SEN_HSYNC_D0_M/SPI_M2_MISO_M
SYS_RSTN_IN(1.8V)
GPIO1_A20/RGMII_TXCLK/DPI_D9/SEN_HSYNC_D1_M/SPI_M2_SCLK_M
GPIO1_A8/EMAC_PTP_PPS0/DPI_D17/PWM0_M/UART5_CTS/SEN_FLASH_D5
MICR_N
MICR_P
MICL_N
MICL_P
HPR_N
HPR_P
RX_CD0_P
RX_CD0_N
RX_CD1_P
RX_CD1_N
RX_CD2_P
RX_CD2_N
RX_CD3_P
RX_CD3_N
VSYS_5V
C198 47uF
C199 47uF
LCD
2x6 Header A
Camera
WIFI_BT
J1
2x6 Header A
2x6 Header B
6P 1.25mm
TP/IMU/RTC/FuelGauge
Camera
State LED
Keep low during booting.
WIFI_BT
Button
GPIO1_A1/UART2_RXD/CLK_AUX3_2/SEN_ELEC_PLS
GPIO1_A0/UART2_TXD/CLK_AUX3_1/SEN_FLASH_D3
GPIO0_A31/UART1_RXD/MCLK7/CLK_AUX3_0/PWM07/SEN_FLASH_D2
GPIO0_A30/UART1_TXD/SPI_M2_CS3/RISC_TDO/PWM06/SEN_FLASH_D1
SYS_RSTN_OUT
GPIO0_A22/TCK/UART4_RXD
GPIO0_A18/MCLK0/UART1_RTS
GPIO3_A3(BOOT)
GPIO0_A21/TMS/UART4_TXD
GPIO1_A2/UART3_TXD/SPI_M2_MOSI/CLK_AUX2_1/PWM04/SEN_FLASH_D4
GPIO1_A3/UART3_RXD/SPI_M2_MISO/CLK_AUX2_2/PWM05/SEN_FLASH_D0
GPIO0_A27/I2C1_SDA/SPI_M2_CS0/PWM03/CLK_AUX1_0/UART4_RTS
GPIO0_A26/I2C1_SCL/SPI_M2_SCLK/PWM02/CLK_AUX0_2/UART4_CTS
GPIO3_A1
GPIO0_A12/THM_AIN2/MCLK6
GPIO0_A11/THM_AIN3
GPIO0_A6/SPI_S_D1/I2C_S0_SCL
GPIO0_A3/SPI_M1_CS1/CLK_AUX1_1/I2S0_MCLK
GPIO0_A2/SPI_M1_CS0/I2S0_DOUT
GPIO0_A4/SPI_M1_SCLK/I2C5_SDA/I2S0_DIN1
GPIO0_A0/SPI_M1_MOSI/I2C6_SDA/I2S0_DIN0
NC
NC
NC
GPIO1_A10/EMAC_PTP_PPS2/DPI_D18/UART5_TXD
GPIO0_A23/SD_PWR_EN
NC
GPIO1_A9/EMAC_PTP_PPS1/DPI_D16/PWM1_M/UART5_RTS/SEN_VSYNC_D0
GPIO1_A11/EMAC_PTP_PPS3/DPI_D15/PWM2_M/UART5_RXD
GPIO0_A29/UART0_RXD/RISC_TMS
GPIO0_A28/UART0_TXD/RISC_TDI
SYS_RSTN_IN
GPIO3_A2/BOOT
RX_CD4_P
RX_CD4_N
RX_CD5_P
RX_CD5_N
GPIO0_A8/SPI_S_CS/I2C7_SCL
GPIO0_A10/SPI_M1_CS3/SPI_S_SCLK/I2C5_SCL/I2S0_LRCK
GPIO0_A7/SPI_S_D0/SPI_M1_CS2
GPIO0_A9/SPI_S_D2/I2C7_SDA
GPIO0_A5/SPI_S_D3/I2C_S0_SDA
GPIO0_A1/SPI_M1_MISO/I2C6_SCL/I2S0_SCLK
GPIO1_A30SDIO_DAT0/I2C3_SCL/I2S1_DOUT1/PWM08
GPIO2_A0/SDIO_CLK/I2C2_SCL/I2S1_MCLK/CLK_AUX2_0
GPIO2_A1/SDIO_CMD/I2C2_SDA/I2S1_LRCK
GPIO1_A31/SDIO_DAT1/I2C3_SDA/I2S1_SCLK/PWM09
GPIO2_A2/SDIO_DAT2/I2C4_SCL/I2S1_DIN1
GPIO2_A3/SDIO_DAT3/I2C4_SDA/I2S1_DIN0
GPIO1_A29/EPHY_LED1/RGMII_MDIO_M/TE1/SEN_ELEC_PLS_M/SPI_M2_CS2_M
GPIO1_A28/EPHY_LED0/RGMII_MDCK_M/TE0/SEN_FLASH_D5_M/SPI_M2_CS3_M
GPIO0_A24/I2C0_SCL/SPI_M2_CS1/RISC/TCK/PWM00/CLK_AUX0_0/UART2_CTS
GPIO0_A25/I2C0_SDA/SPI_M2_CS2/RISC_TRSTN/PWM01/CLK_AUX0_1/UART2_RTS
GPIO2_A8/SD_DAT2/I2C_S1_SCL
GPIO2_A5/SD_DAT1/MCLK3
GPIO2_A4/SD_DAT0/MCLK2
GPIO2_A7/SD_CMD/I2C_S1_SDA
GPIO2_A9/SD_DAT3/MCLK5
GPIO2_A6/SD_CLK
EPHY_RXP
EPHY_RXN
EPHY_TXP
EPHY_TXN
1V8
3V3
R131 2kΩ
R76 2kΩ
R2354 2kΩ
R2356 2kΩ
GPIO0_A27/I2C1_SDA_1V8
GPIO0_A27/I2C1_SDA_3V3
GPIO0_A26/I2C1_SCL_1V8
GPIO0_A26/I2C1_SCL_3V3
Q12.1 ES3134KZ
Q12.2 ES3134KZ
U49
U64
贴片螺柱M1.6*¢3*1.5+¢2*0.8
N8
N7
N6
N5
GND
原理图
MaixCam2_379C
更新日期
2025-09-16
板子
MaixCam2_379C
图页
NGFF
绘制
审阅
MaixCam2
版本
尺寸
页 1 共 13
V1.0
A4
嘉立创EDA

Wi-Fi & BT

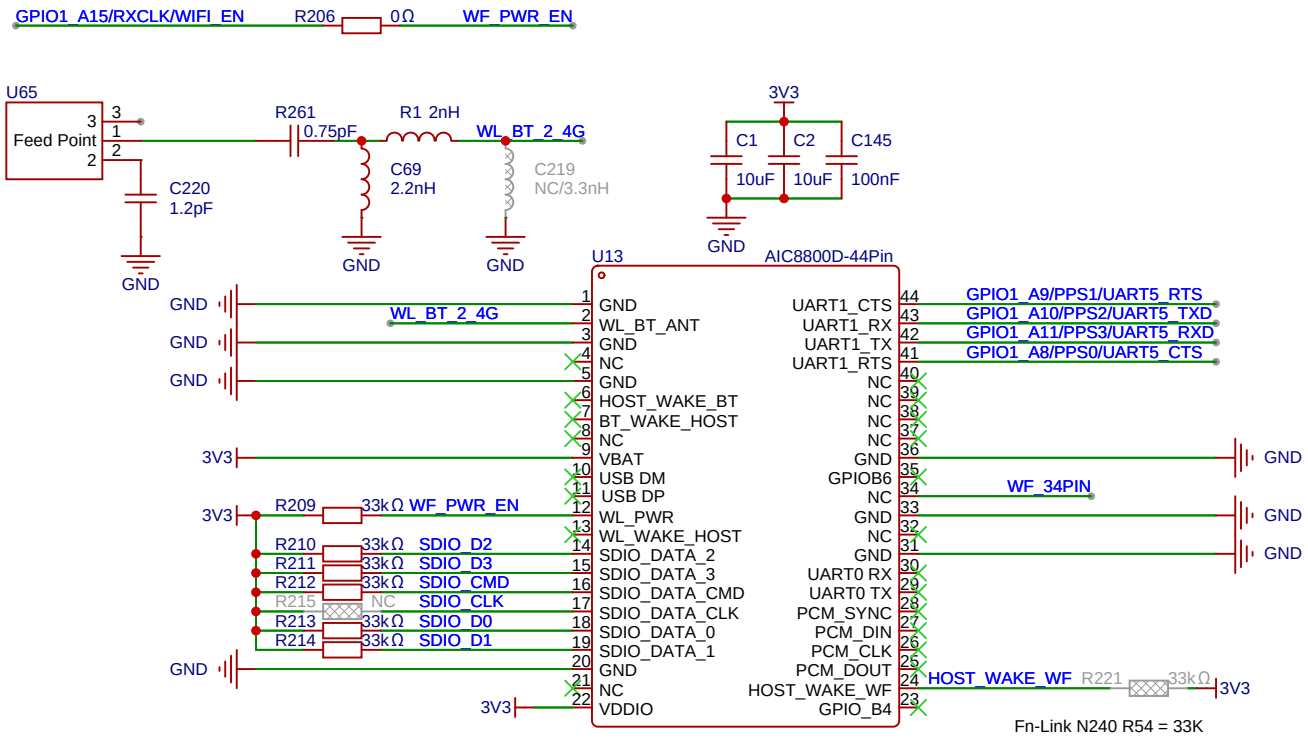

原理图	MaixCam2_379C	更新日期	2025-09-16
板子	MaixCam2_379C	图页	WIFI
绘制		MaixCam2	
审阅			
		版本	尺寸	页 2 共 13
嘉立创EDA		V1.0	A4	嘉立创EDA

PWR & User LED | BOOT & RESET KEY

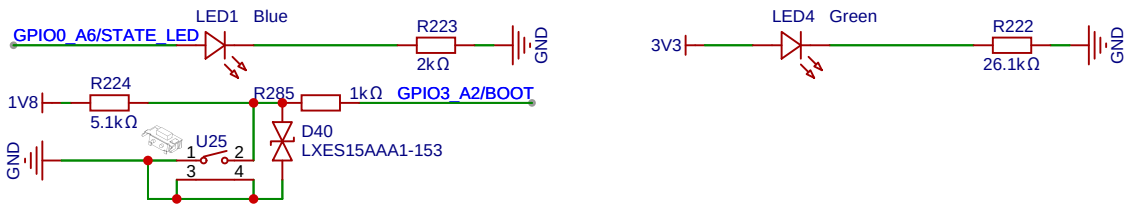

Flash Light

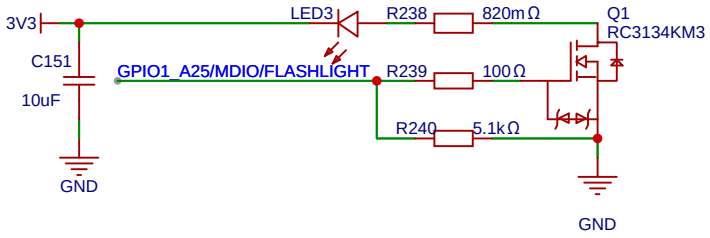

原理图	MaixCam2_379C	更新日期	2025-09-16
板子	MaixCam2_379C	图页	Button_LED
绘制		MaixCam2	
审阅			
		版本	尺寸	页 3 共 13
嘉立创EDA		V1.0	A4	嘉立创EDA

Backlight LED Driver (Series)

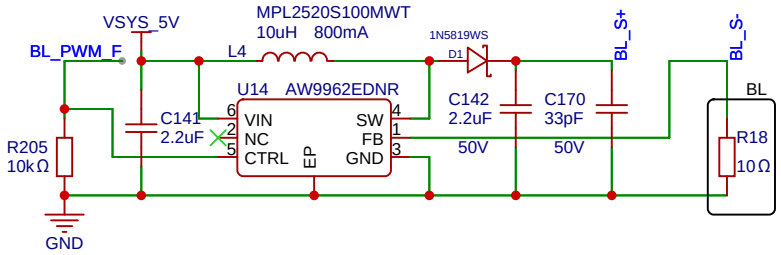

R = 200mV/20mA/N = 10Ω/N

Backlight LED (N)	BL (R18)
1 Series	NC
2 Series	10Ω
4 Series	3.3Ω

GPIO1_A22/LCD_PWM — BL_PWM_F

GPIO0_A23/SD_PWR_EN/LCD_RST — LCD0_RESET

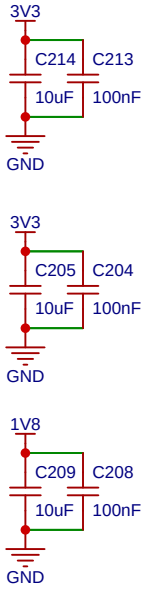

Touch Interface

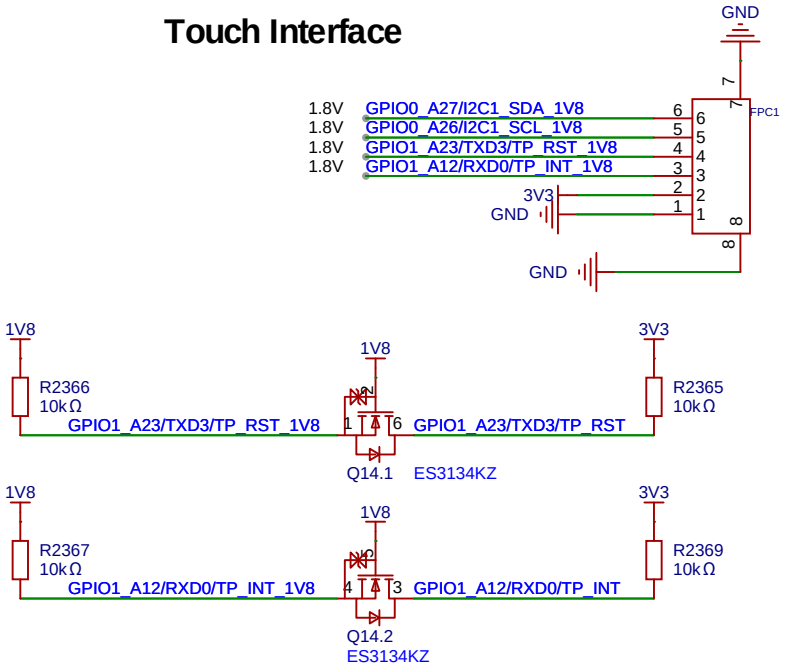

DSI Interface

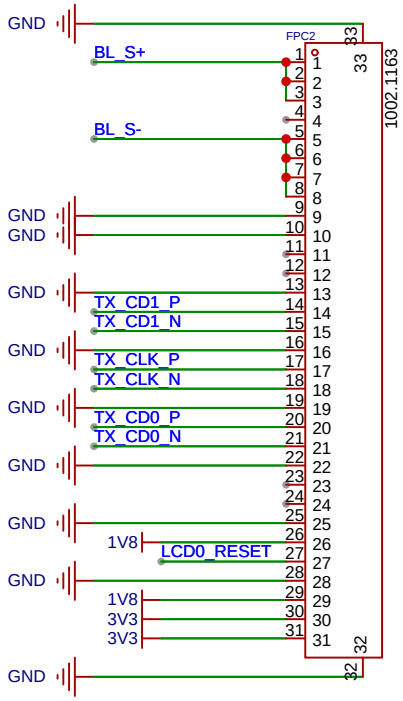

原理图	MaixCam2_379C	更新日期	2025-09-16
板子	MaixCam2_379C	图页	LCD
绘制		MaixCam2	
审阅			
		版本	尺寸	页 4 共 13
嘉立创EDA		V1.0	A4	嘉立创EDA

Camera Connector

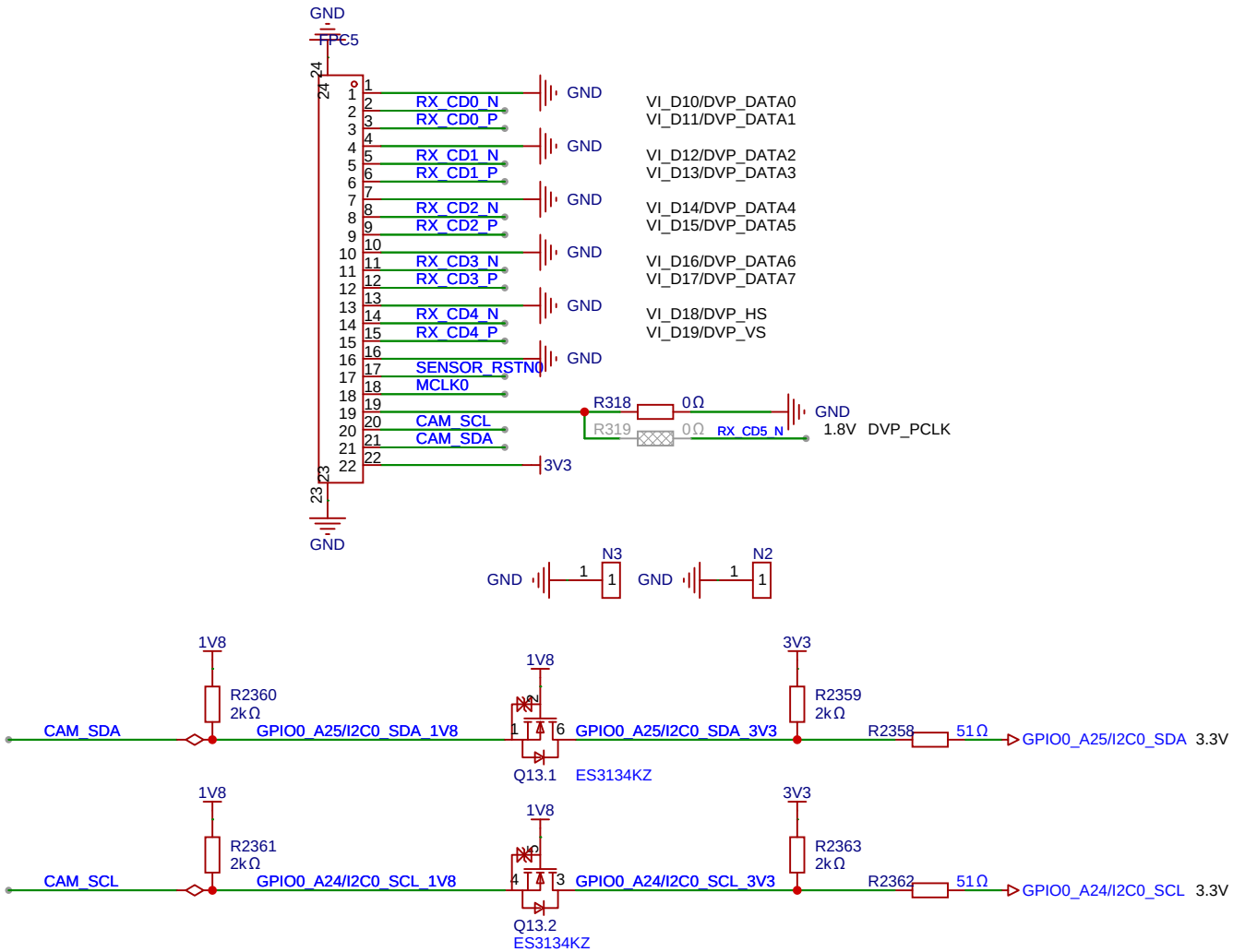

原理图	MaixCam2_379C	更新日期	2025-09-16
板子	MaixCam2_379C	图页	Camera
绘制		MaixCam2	
审阅			
		版本	尺寸	页 5 共 13
嘉立创EDA		V1.0	A4	嘉立创EDA

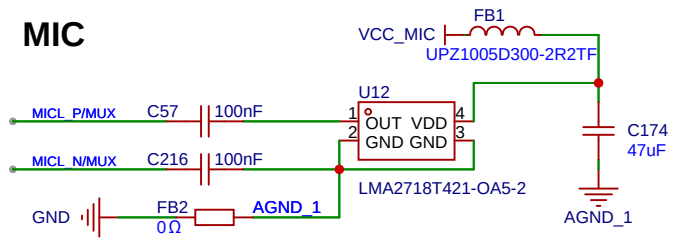

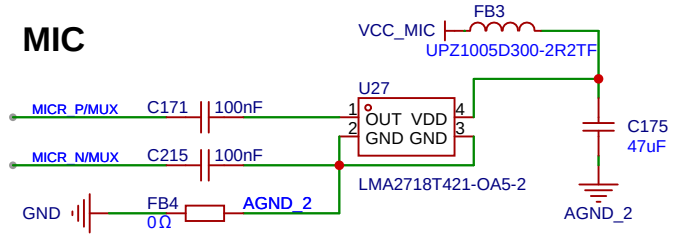

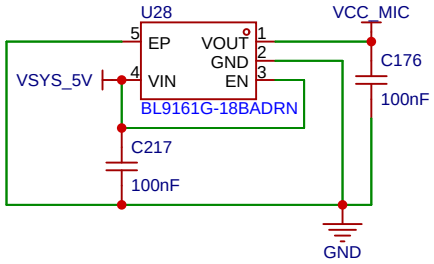

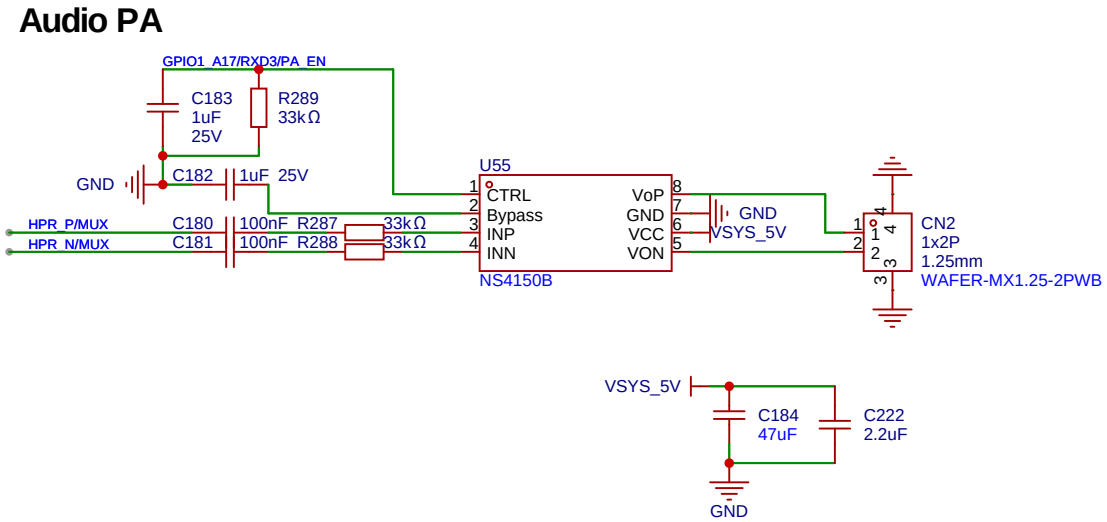

原理图	MaixCam2_379C	更新日期	2025-09-16
板子	MaixCam2_379C	图页	Audio
绘制		MaixCam2	
审阅			
		版本	尺寸	页 6 共 13
嘉立创EDA		V1.0	A4	嘉立创EDA

IMU

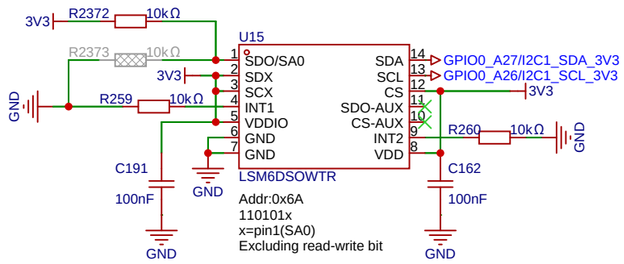

RTC

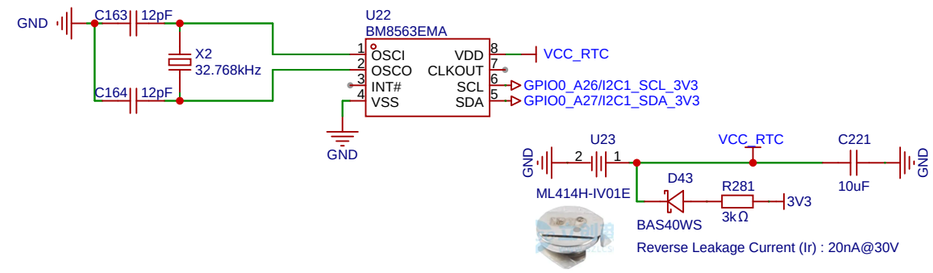

2x6 Header B

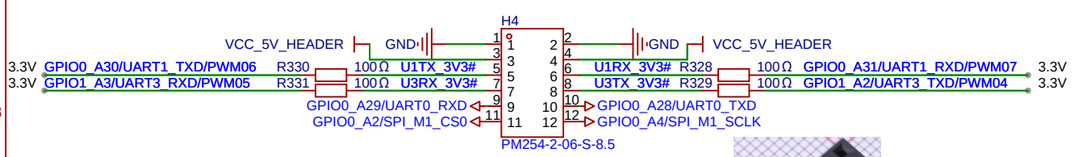

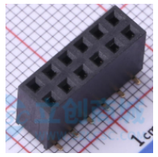

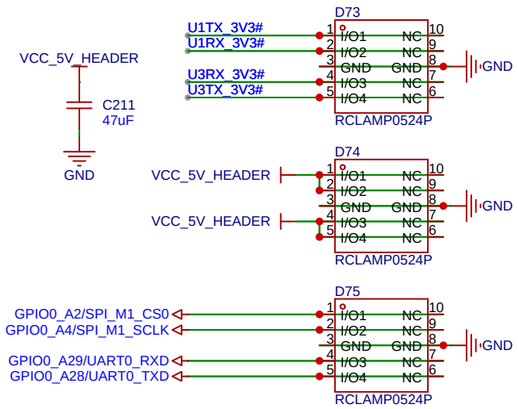

2x6 Header A

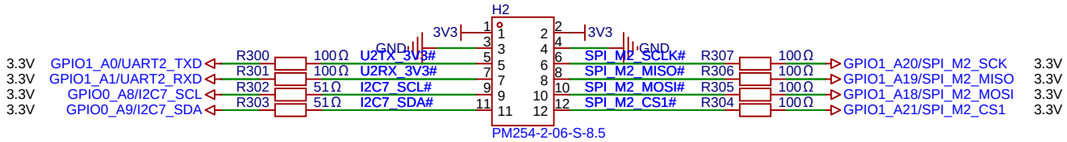

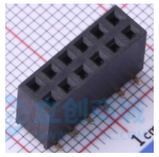

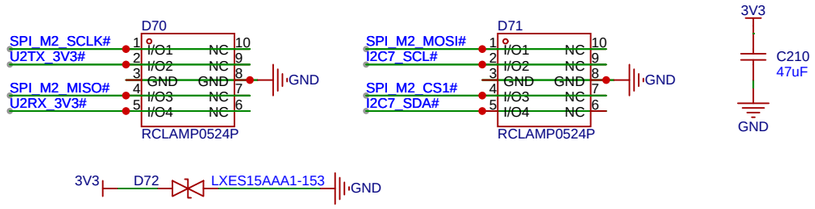

6P 1.25mm

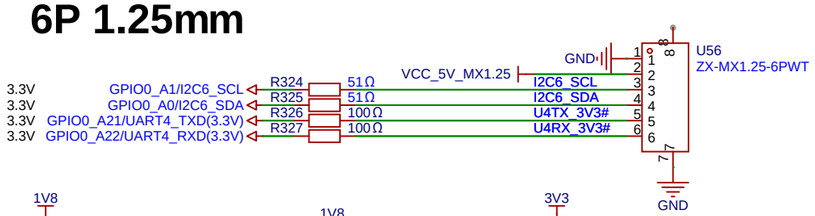

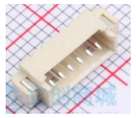

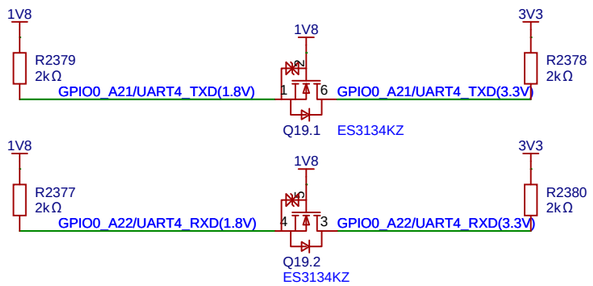

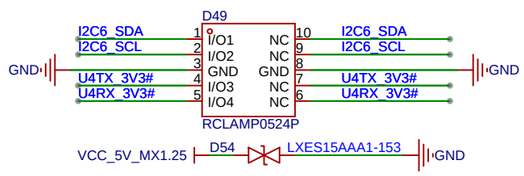

原理图	MaixCam2_379C	更新日期	2025-09-16
板子	MaixCam2_379C	图页	Peripheral
绘制		MaixCam2	
审阅			
	版本	尺寸	页 7 共 13
嘉立创EDA	V1.0	A4	嘉立创EDA

USB TypeC

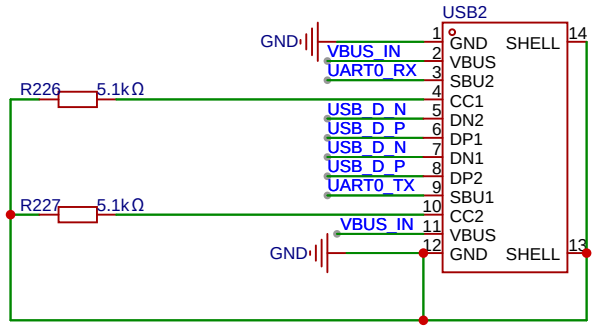

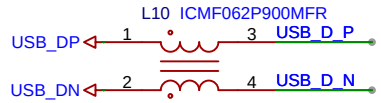

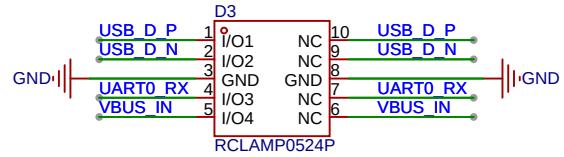

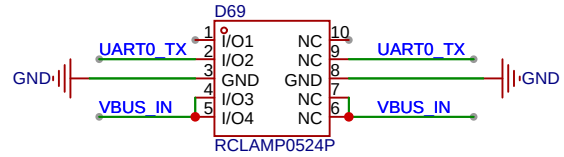

原理图	MaixCam2_379C	更新日期	2025-09-16
板子	MaixCam2_379C	图页	USB
绘制		MaixCam2	
审阅			
		版本 / 尺寸	页 8 共 13
嘉立创EDA		V1.0 / A4	嘉立创EDA

POWER PATH

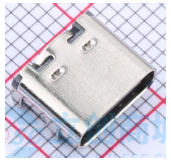

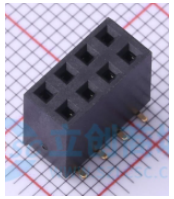

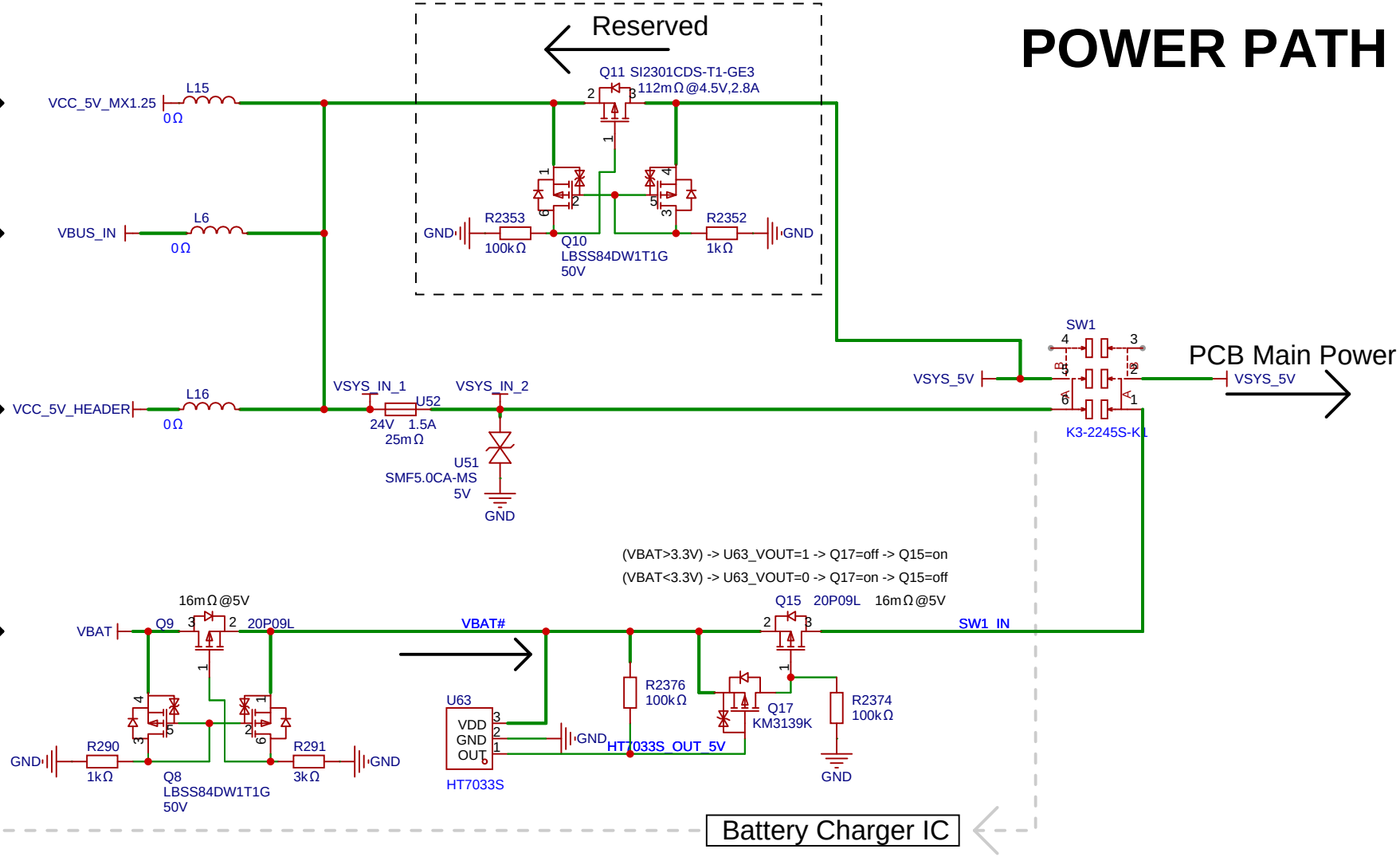

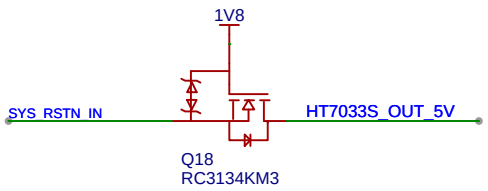

上电时给630提供一个一百多毫秒的复位信号，确保630正常启动

Provide a reset signal of more than 100ms to the 630 during power-on to ensure its normal startup.

原理图	MaixCam2_379C	更新日期	2025-09-16
板子	MaixCam2_379C	图页	PowerPath
绘制		MaixCam2	
审阅			
	版本	尺寸	页 9 共 13
嘉立创EDA	V1.0	A4	嘉立创EDA

Battery Connector

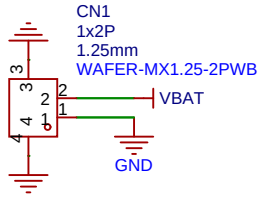

Fuel Gauge IC

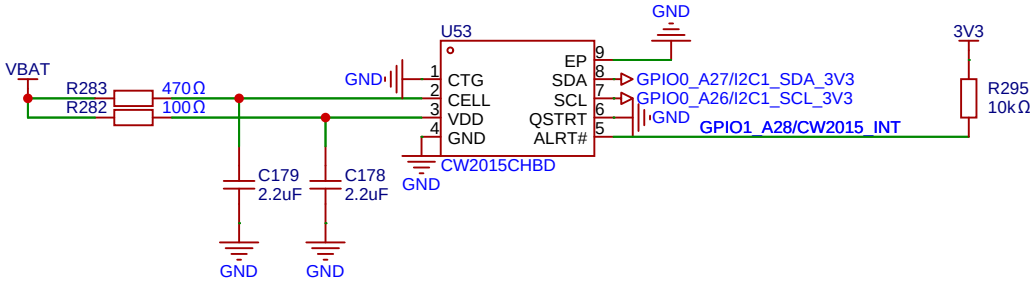

Battery Charger

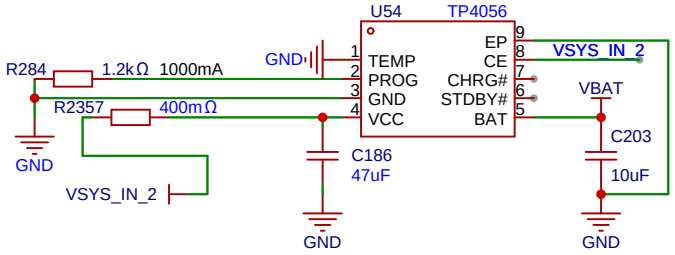

原理图	MaixCam2_379C	更新日期	2025-09-16
板子	MaixCam2_379C	图页	Battery
绘制		MaixCam2	
审阅			
		版本	尺寸	页 10 共 13
嘉立创EDA		V1.0	A4	嘉立创EDA

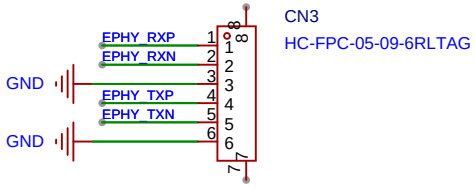

原理图	MaixCam2_379C	更新日期	2025-09-16
板子	MaixCam2_379C	图页	Ethernet
绘制		MaixCam2	
审阅			
		版本	尺寸	页 11 共 13
嘉立创EDA		V1.0	A4	嘉立创EDA

TF card Connector

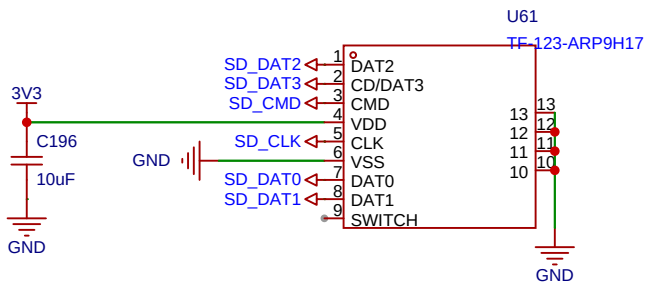

原理图	MaixCam2_379C	更新日期	2025-09-16
板子	MaixCam2_379C	图页	TF
绘制		MaixCam2	
审阅			
		版本	尺寸	页 12 共 13
嘉立创EDA		V1.0	A4	嘉立创EDA

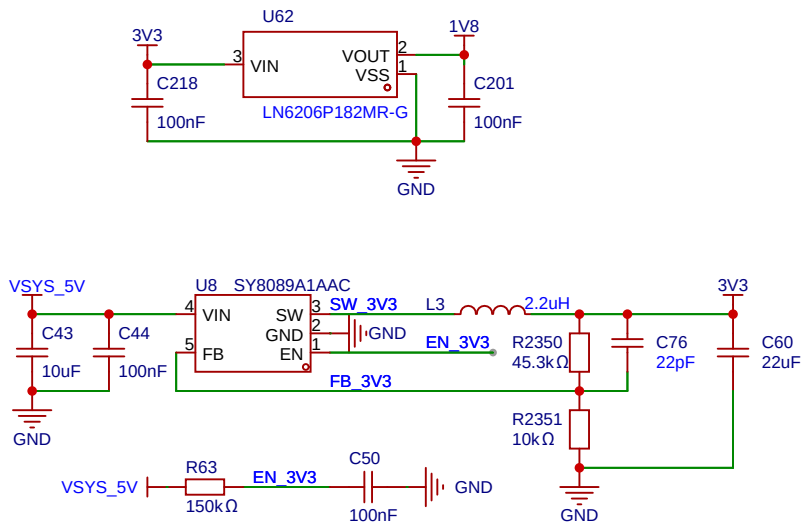

原理图	MaixCam2_379C	更新日期	2025-09-16
板子	MaixCam2_379C	图页	LDO_DCDC
绘制		MaixCam2	
审阅			
		版本	尺寸	页 13 共 13
嘉立创EDA		V1.0	A4	嘉立创EDA