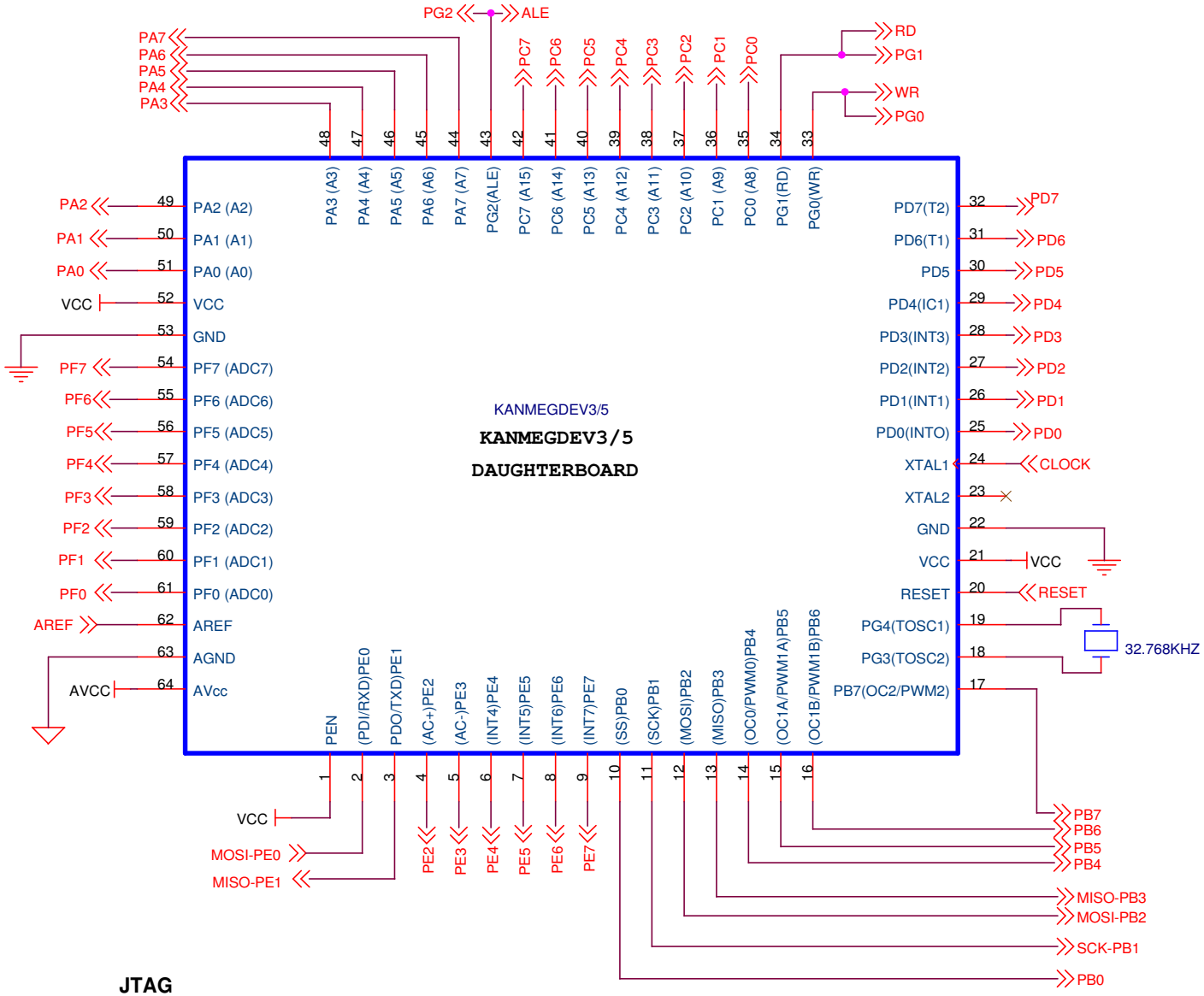

EXTERNAL PORT (CONNECTIONS)

Misc

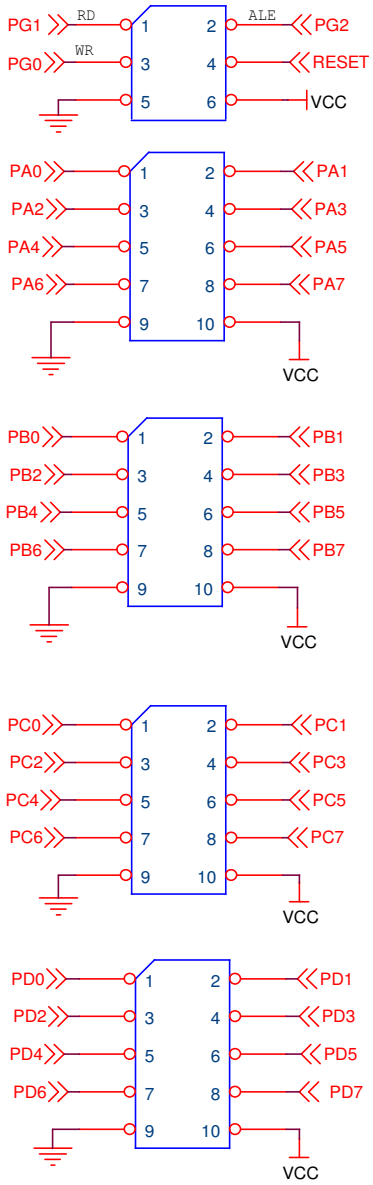

JTAG Interface

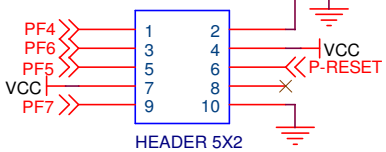

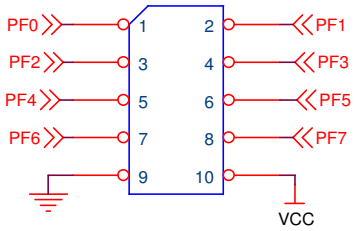

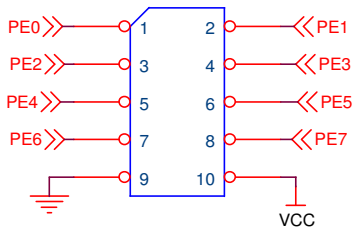

Title	STK300 revB	
Size A4	Document Number Embedded results-stk300b	Rev B
Date: Wednesday, June 07, 2006	Sheet 1 of 3	