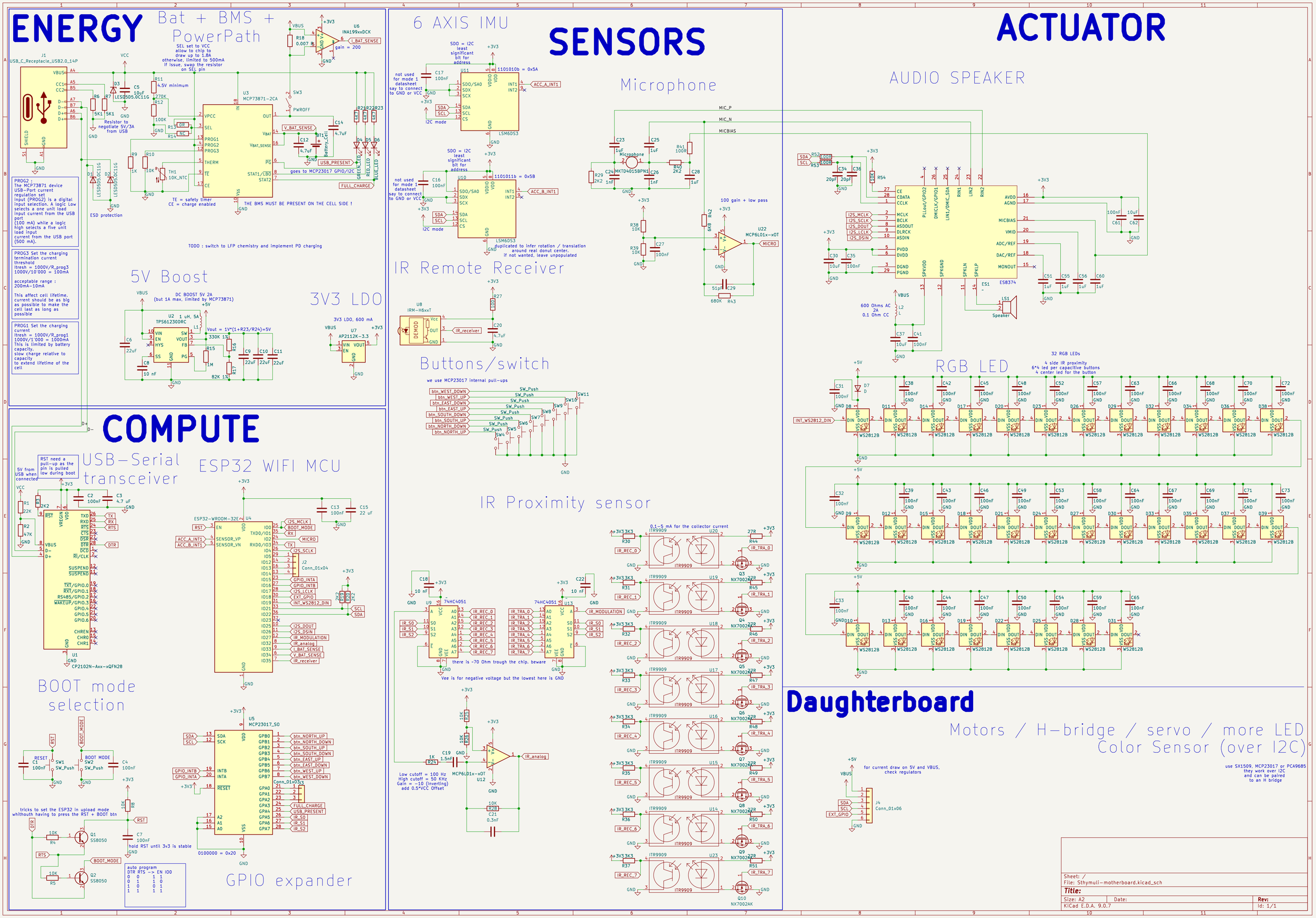
ENERGY
Bat + BMS + PowerPath
5V Boost
3V3 LDO
SENSORS
6 AXIS IMU
Microphone
IR Remote Receiver
Buttons/switch
IR Proximity sensor
ACTUATOR
AUDIO SPEAKER
RGB LED
COMPUTE
USB-Serial transceiver
ESP32 WIFI MCU
BOOT mode selection
GPIO expander
Daughterboard
Motors / H-bridge / servo / more LED
Color Sensor (over I2C)
Sheet: /
File: Sthymuli-motherboard.kicad_sch
Title:
Size: A2
Date:
Rev:
KiCad E.D.A. 9.0.7
Id: 1/1