ENERGY

USB-C input

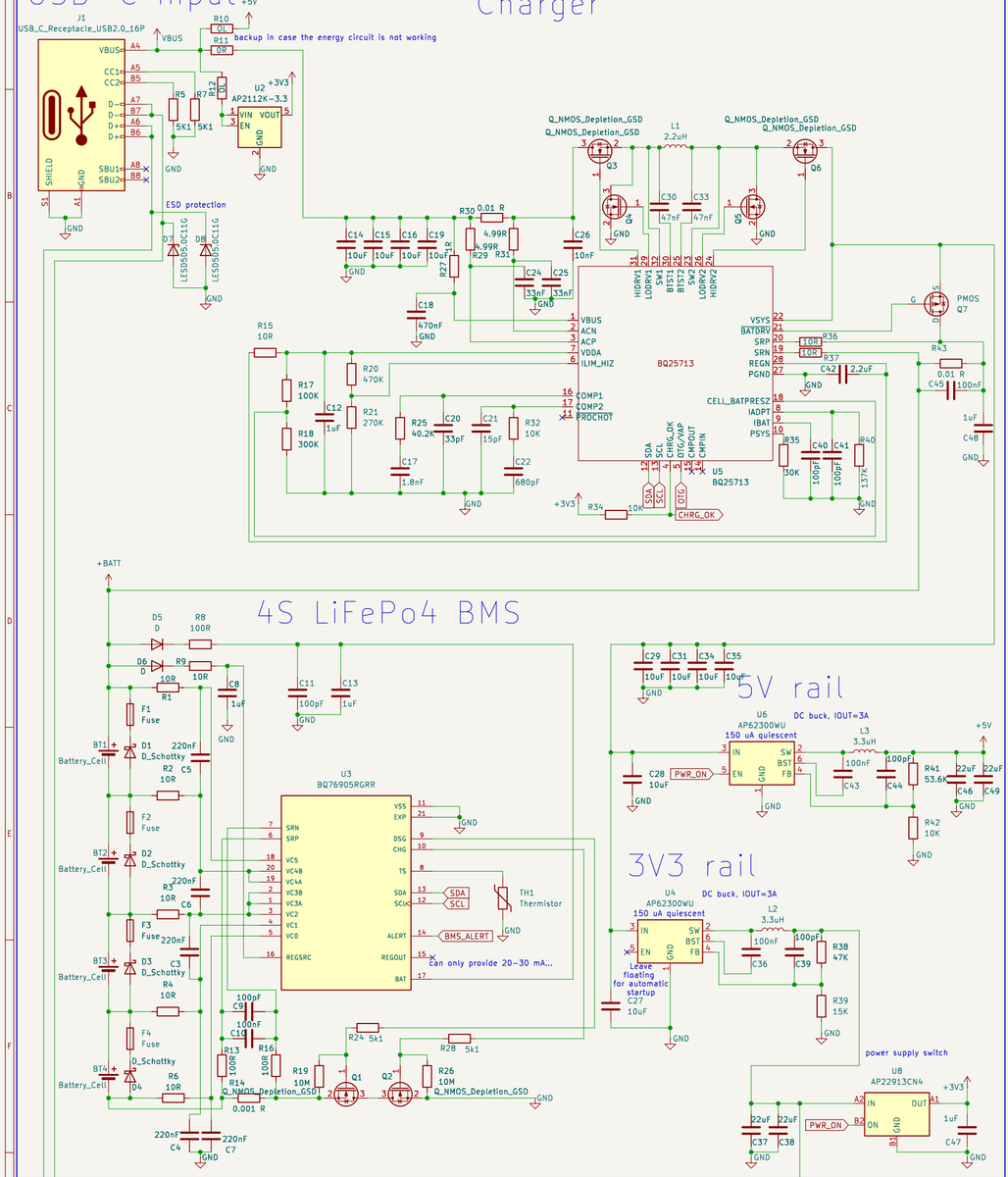

Daughterboard

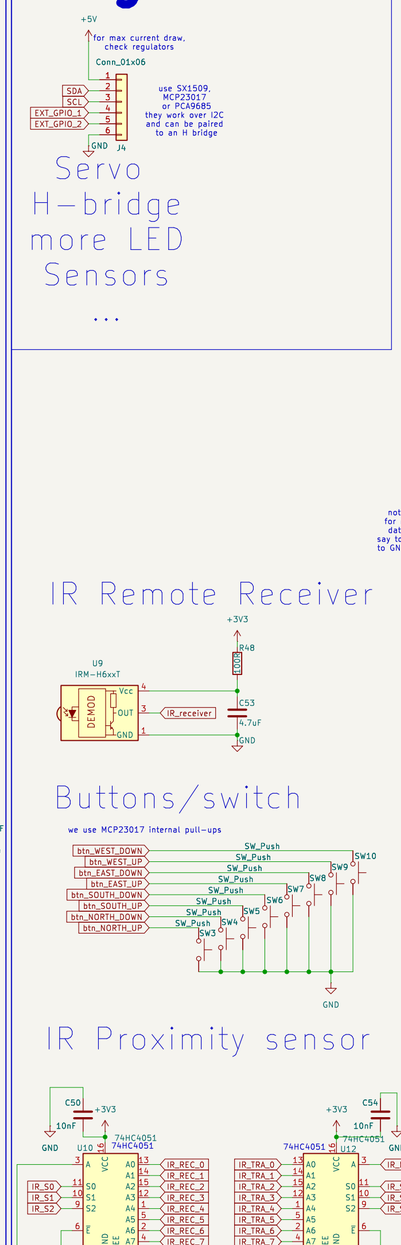

SENSORS

Microphone

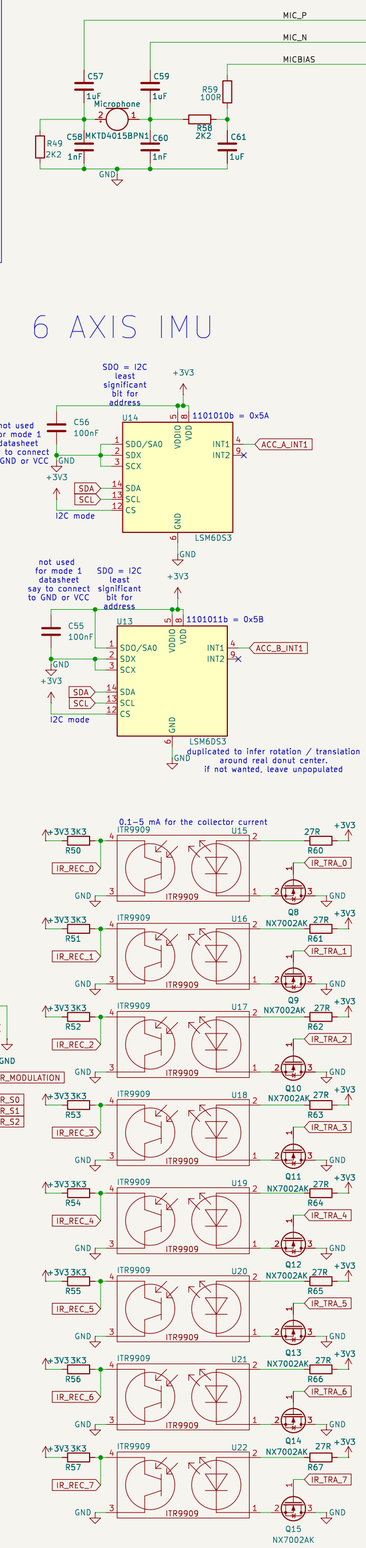

ACTUATOR

AUDIO SPEAKER

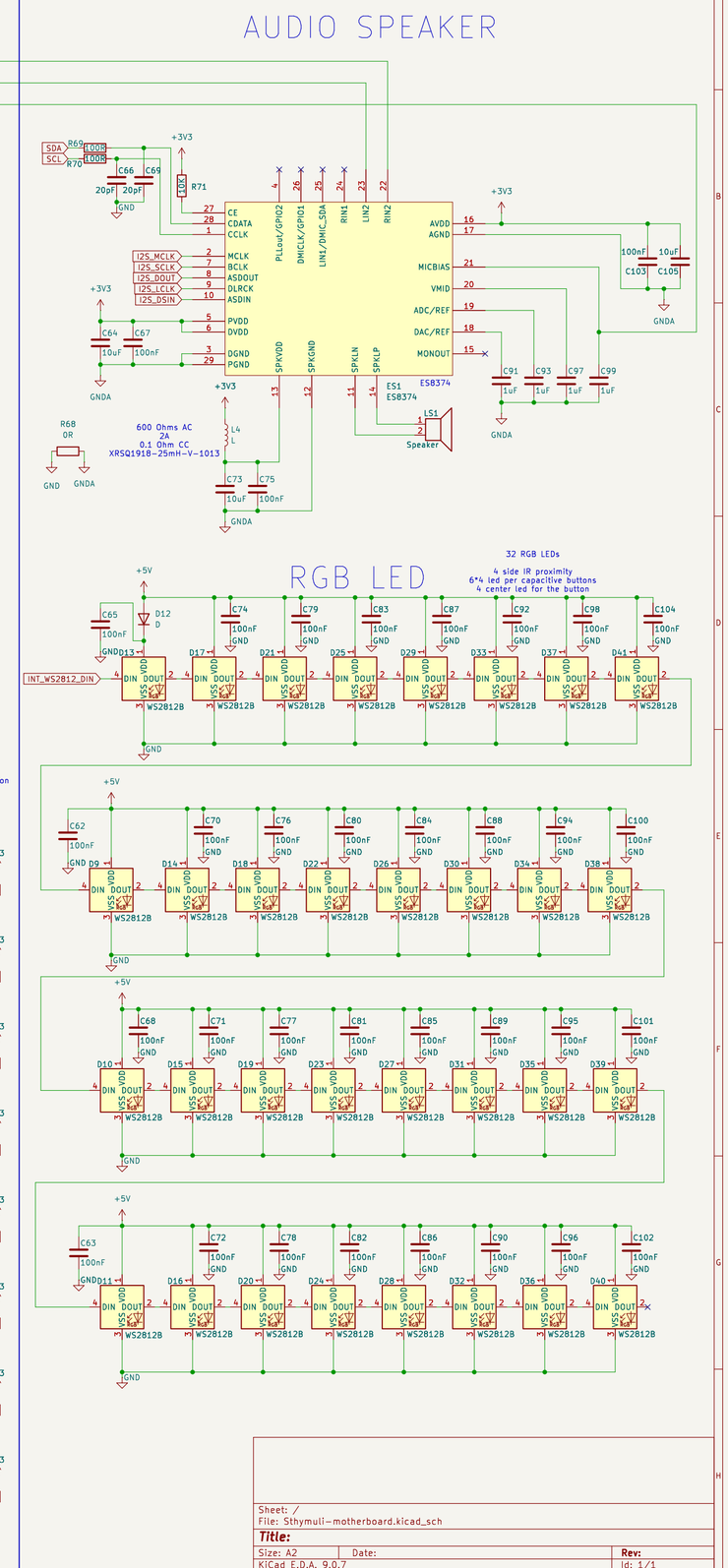

COMPUTE

ESP32 WIFI MCU

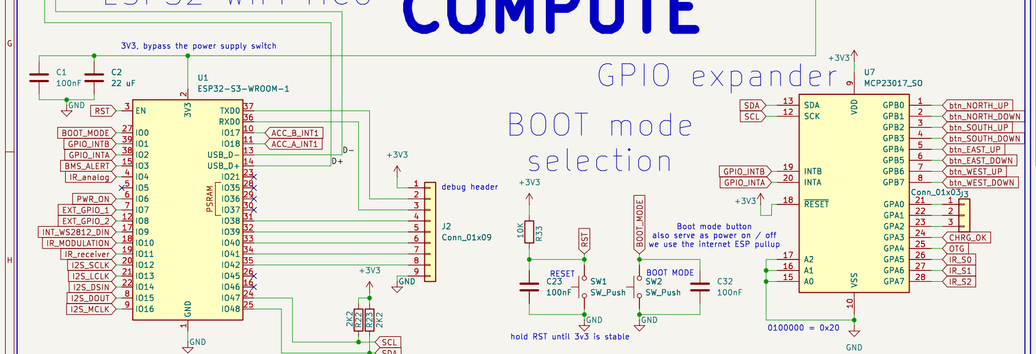

Sheet: /
File: Sthymuli-motherboard.kicad_sch

Title:

Size: A2	Date:	Rev:
KiCad E.D.A. 9.0.7		Id: 1/1