ENERGY

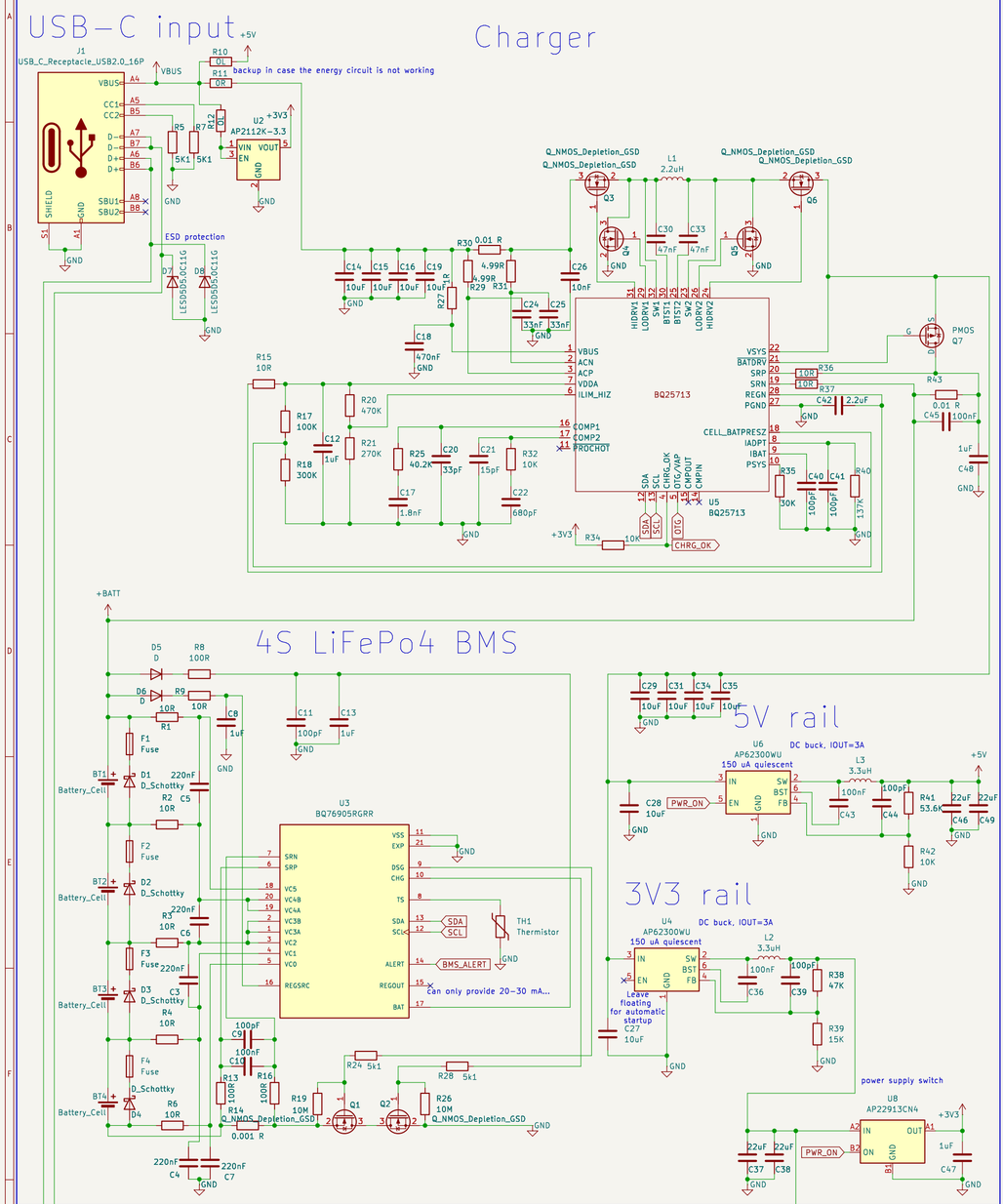

COMPUTE

Daughterboard

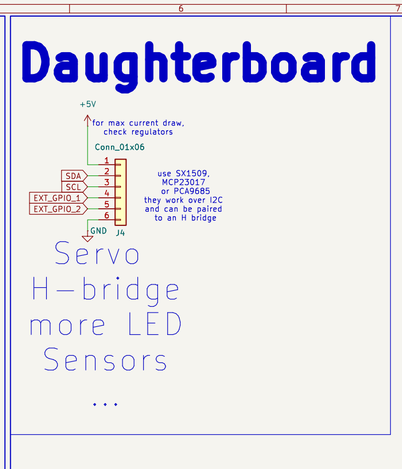

SENSORS

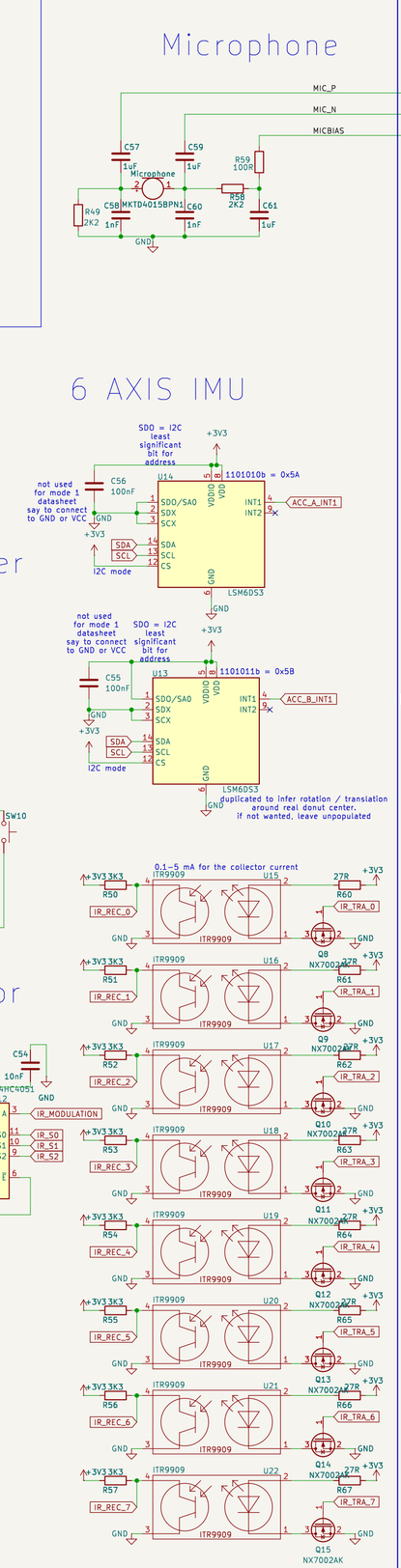

ACTUATOR

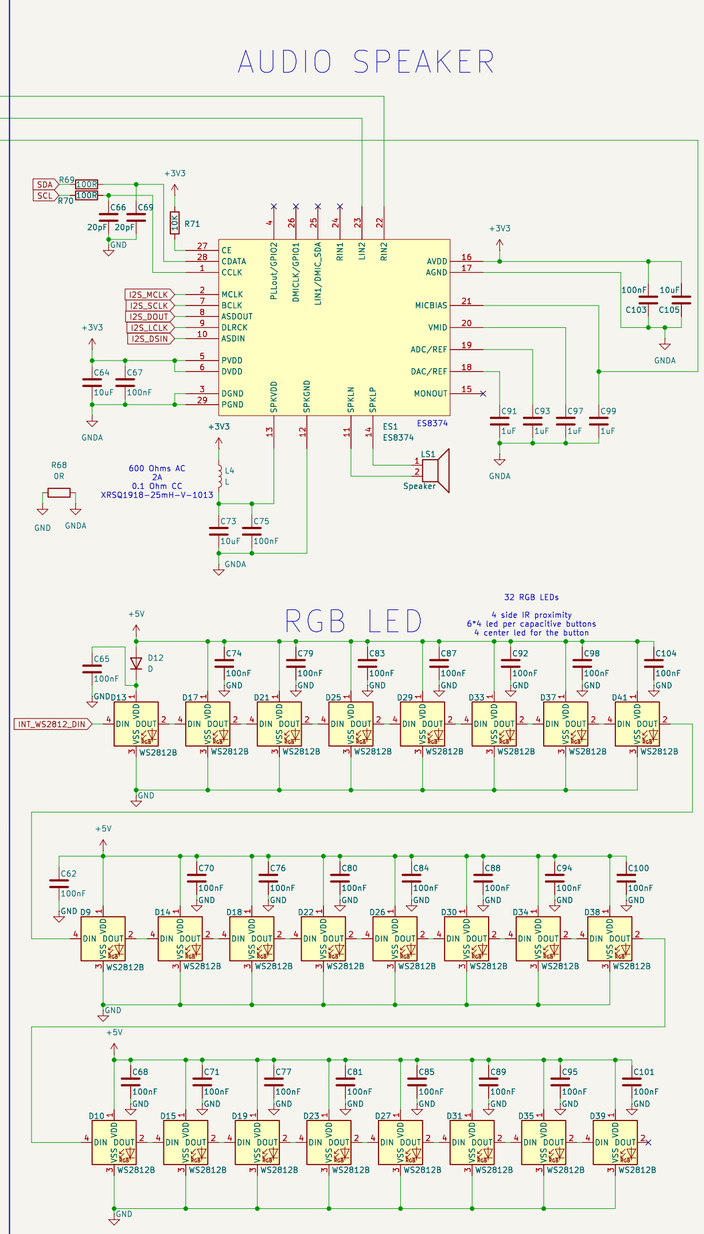

Sheet: /	
File: Sthymuli-motherboard.kicad_sch	
Title:	
Size: A2	Date:
KiCad E.D.A. 9.0.7	Rev:
	Id: 1/1