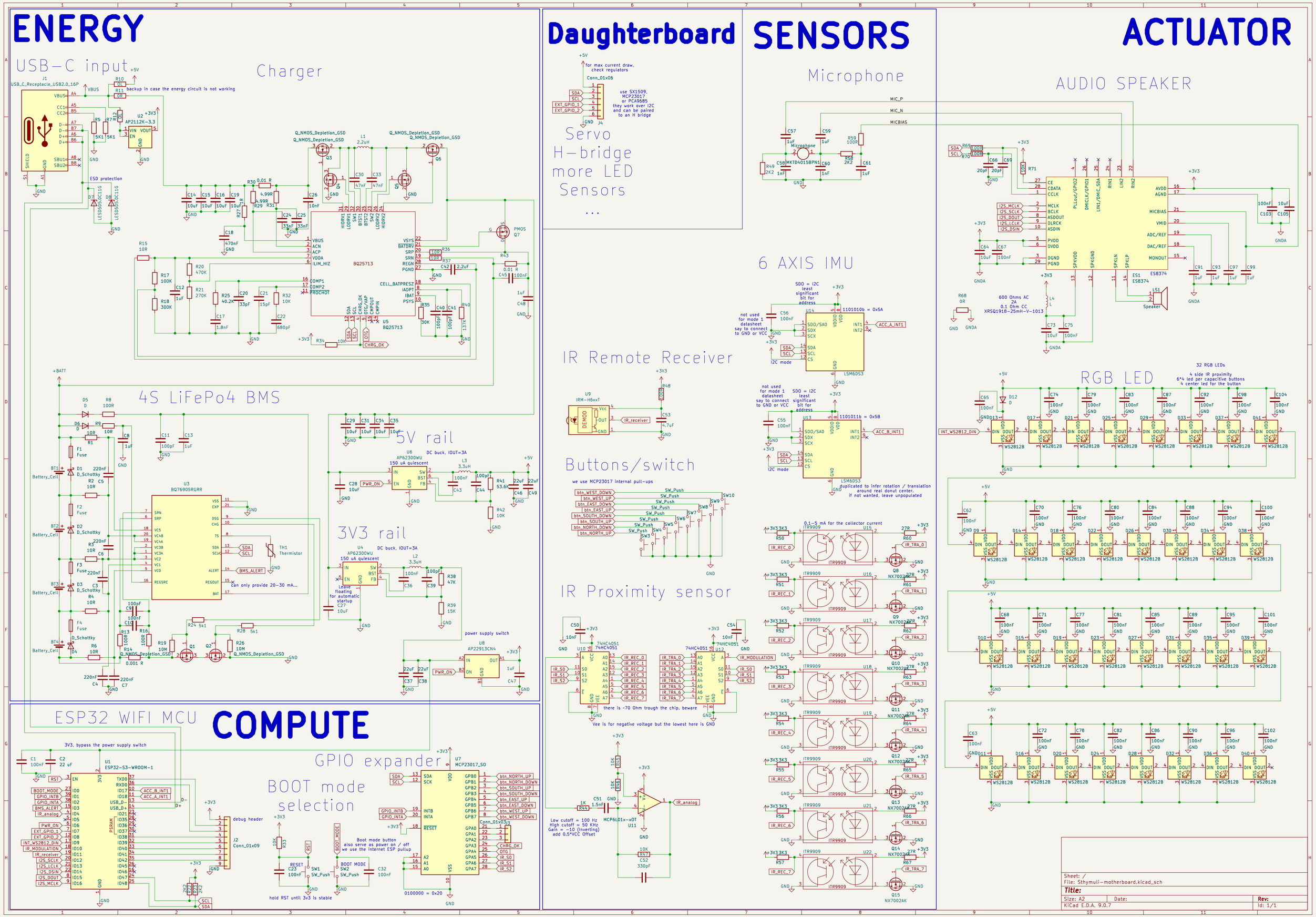
ENERGY
USB-C input
Charger
4S LiFePo4 BMS
5V rail
3V3 rail
Daughterboard
Servo
H-bridge
more LED
Sensors
...
SENSORS
Microphone
6 AXIS IMU
IR Remote Receiver
Buttons/switch
IR Proximity sensor
ACTUATOR
AUDIO SPEAKER
RGB LED
COMPUTE
ESP32 WIFI MCU
GPIO expander
BOOT mode selection
Sheet: /
File: Sthymuli-motherboard.kicad_sch
Title:
Size: A2
Date:
Rev:
KiCad E.D.A. 9.0.7
Id: 1/1