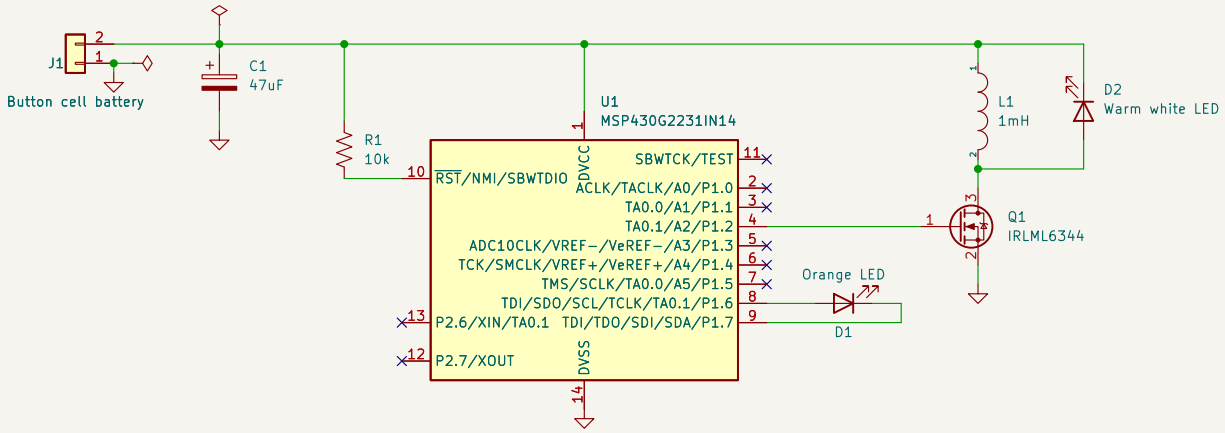

Design by
Navaneeth Bhardwaj

Sheet: /
File: firefly_v1.kicad_sch

Title: uLightHouse

Size: A4	Date: 2023-07-02	**Rev: 1**
KiCad E.D.A. kicad 6.0.11-2627ca5db0~126~ubuntu20.04.1		Id: 1/1