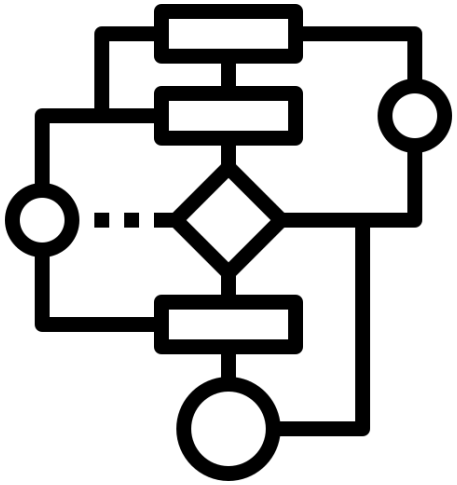

CS 310: Algorithms

Lecture 25

Instructor: Naveed Anwar Bhatti

Few Slides taken from Dr. Imdad's CS 510 course

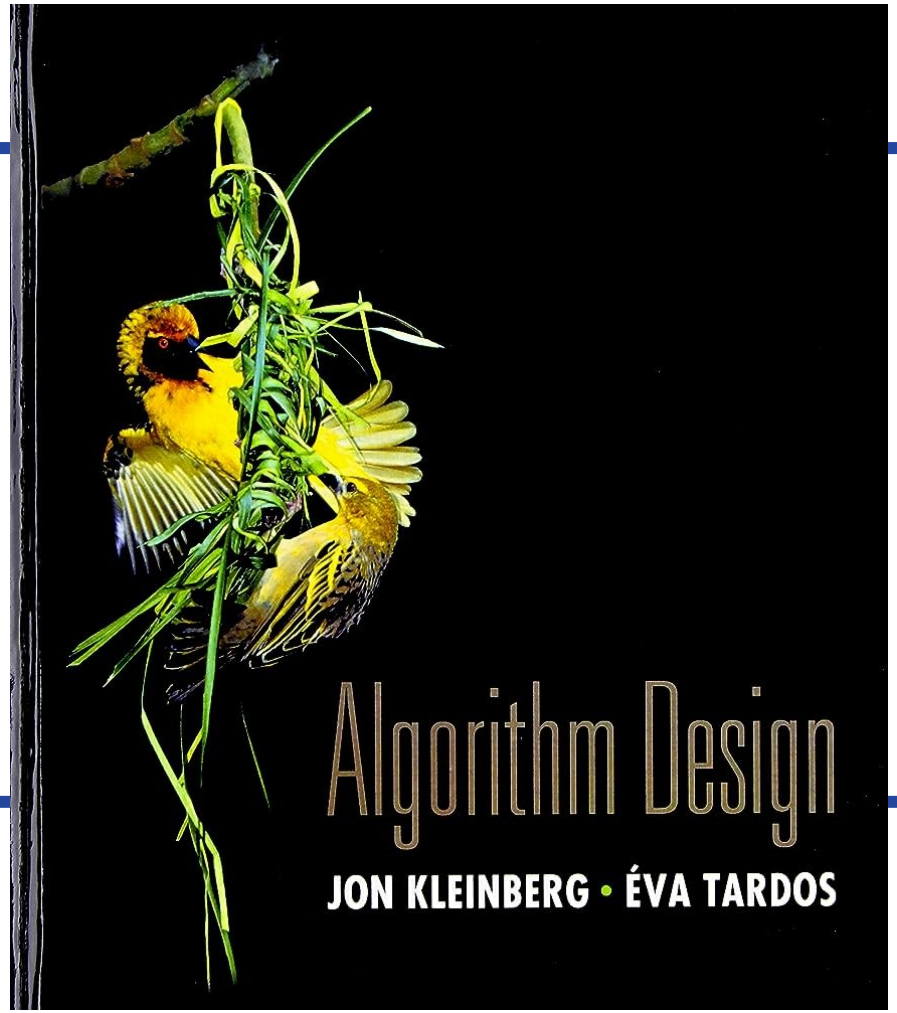

Chapter 8:
NP and Computational Intractability

Section 8.3 :
NP-hard and NP-Complete

NP-Complete vs NP-Hard

A problem X is NP-HARD, if every problem in NP is polynomial time reducible to X

$$\forall\, Y \in \mathrm{NP}, \quad Y \leq_p X$$

A problem $X \in \mathrm{NP}$ is NP-COMPLETE, if every problem in NP is polynomial time reducible to X

$$X \in \mathrm{NP} \quad \text{AND} \quad \forall\, Y \in \mathrm{NP}, \quad Y \leq_p X$$

NP-Complete vs NP-Hard

A problem X is NP-HARD, if every problem in NP is polynomial time reducible to X

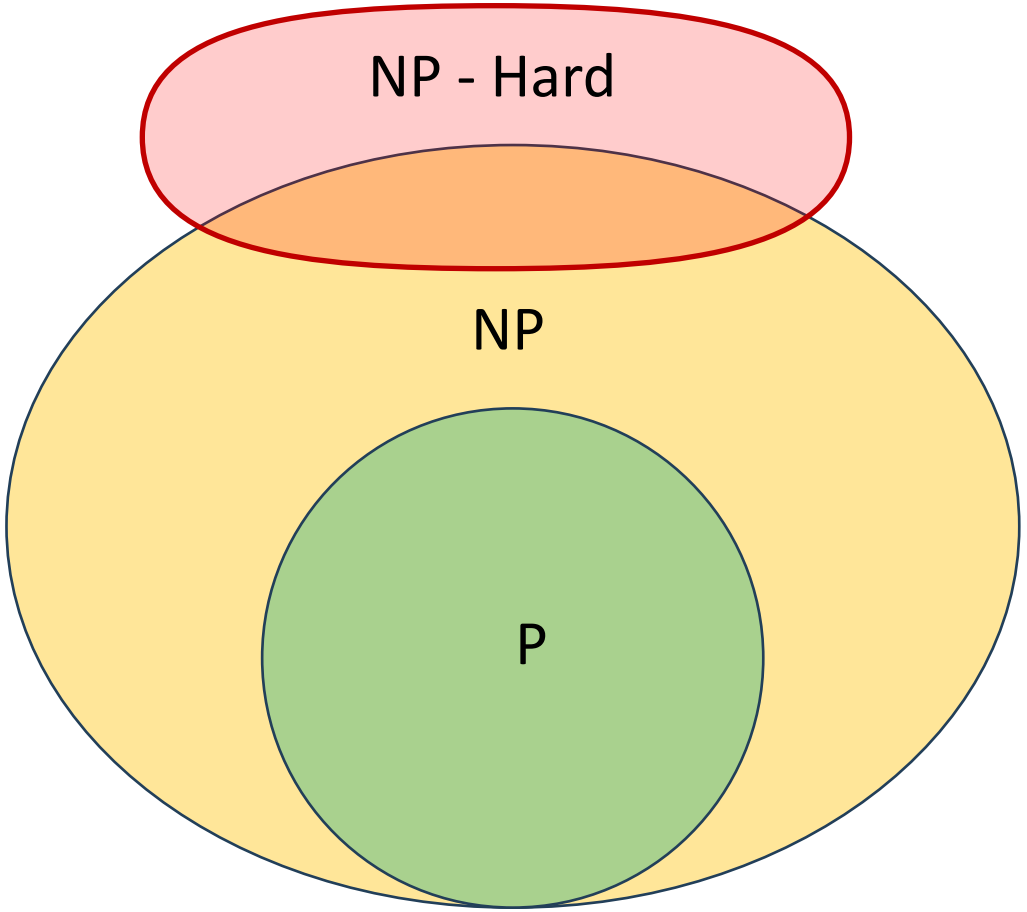

NP-Complete vs NP-Hard

A problem $X \in \mathrm{NP}$ is NP-COMPLETE, if every problem in NP is polynomial time reducible to X

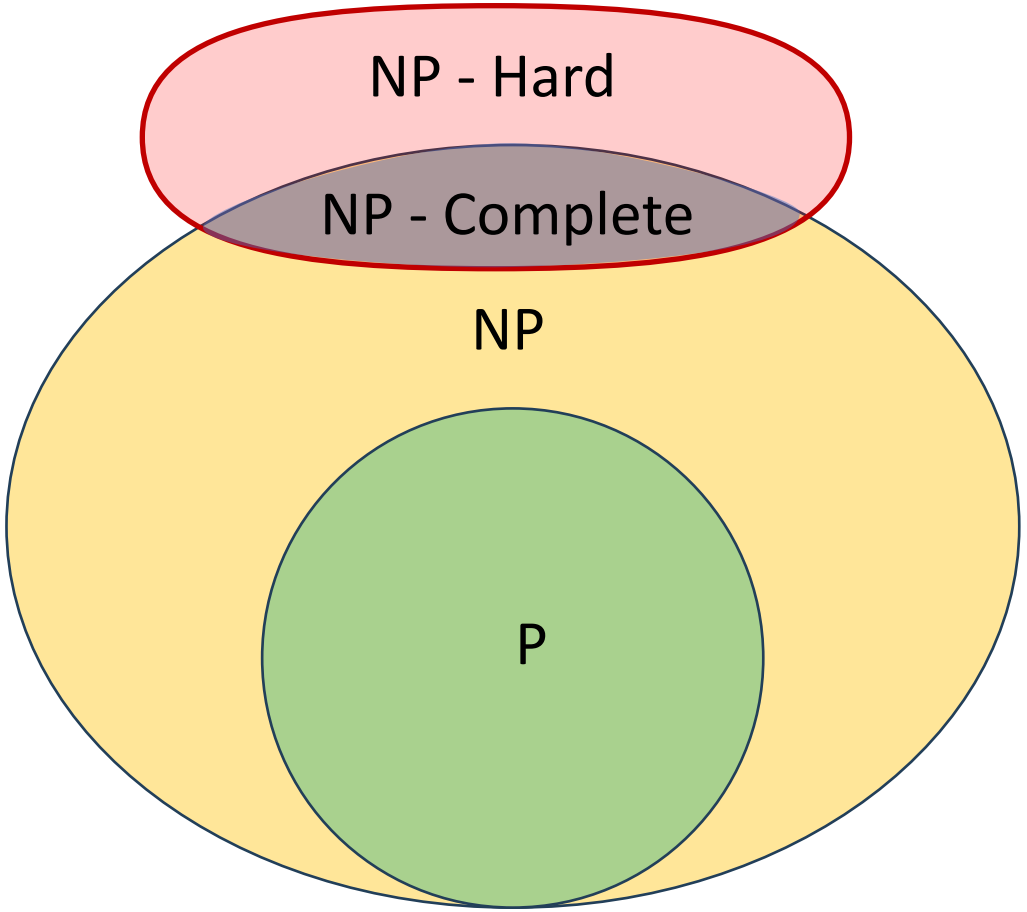

NP-Complete Problems

A problem X is **NP-Complete**, if

1. $X \in \mathrm{NP}$
2. $\forall\, Y \in \mathrm{NP}\ Y \leq_p X$

$\mathrm{P} \subseteq \mathrm{NP}$

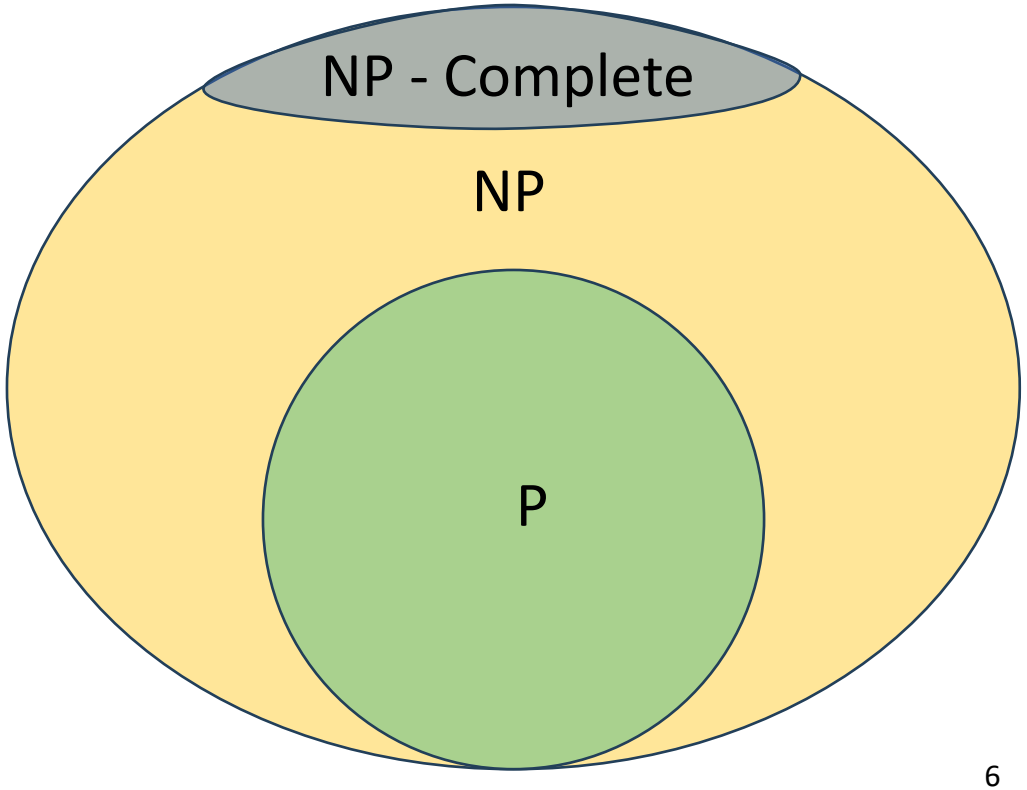

NP-Complete Problems

A problem X is **NP-Complete**, if

1. $X \in \mathrm{NP}$
2. $\forall\, Y \in \mathrm{NP}\ Y \leq_p X$

$\mathrm{P} \subseteq \mathrm{NP}$ $\qquad$ $\mathrm{NPC} \subseteq \mathrm{NP}$

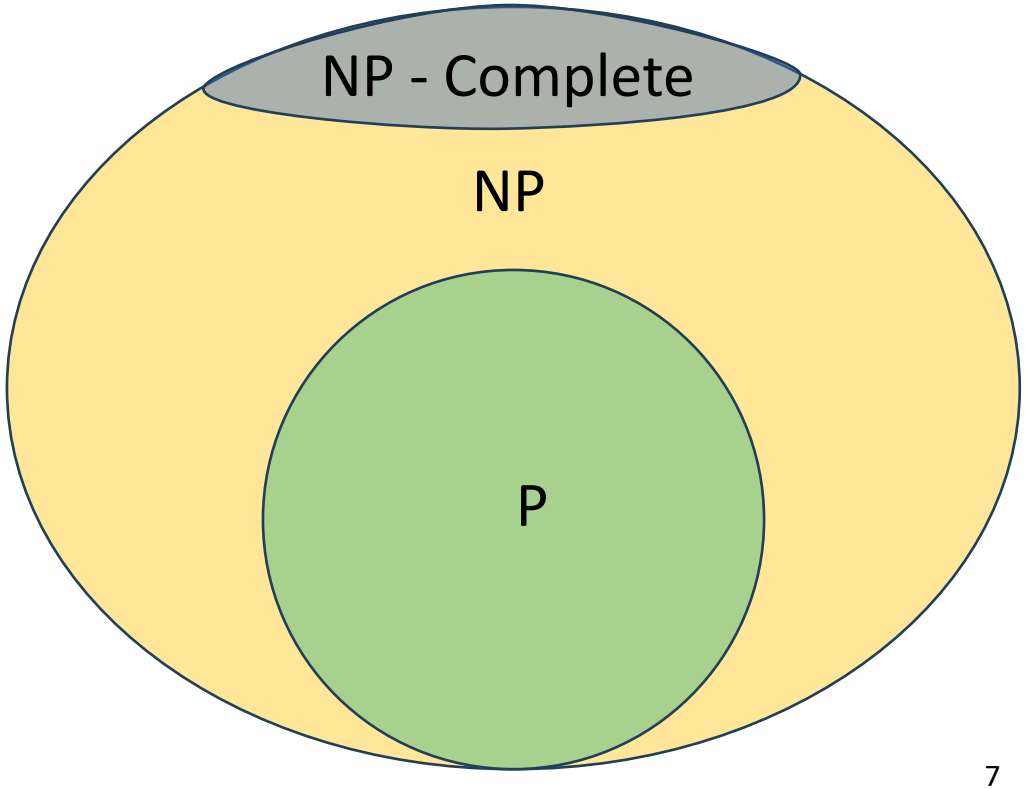

NP-Complete Problems

A problem X is **NP-Complete**, if

1. $X \in \mathrm{NP}$
2. $\forall\, Y \in \mathrm{NP}\ Y \leq_p X$

$\mathrm{P} \subseteq \mathrm{NP}$ $\qquad$ $\mathrm{NPC} \subseteq \mathrm{NP}$

- Take any $X \in \mathrm{NP}$ and prove that it cannot be solved in poly time
  - You proved $\mathrm{P} \neq \mathrm{NP}$

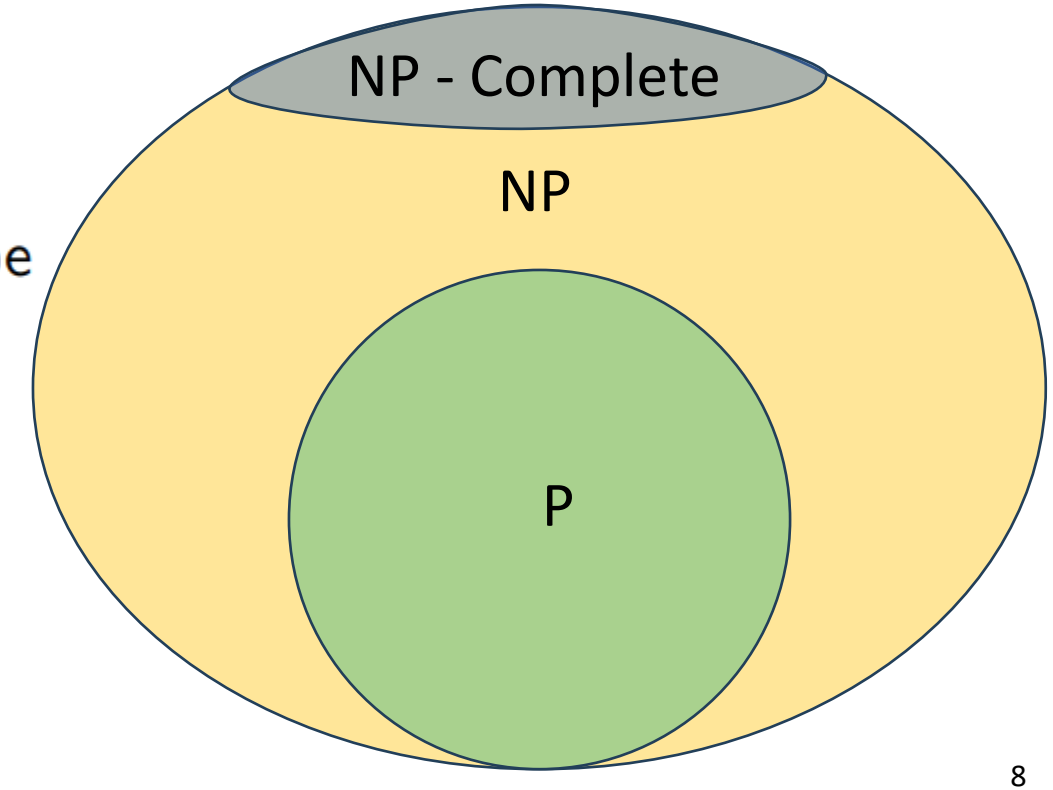

NP-Complete Problems

A problem X is **NP-Complete**, if

1. $X \in \mathrm{NP}$
2. $\forall\, Y \in \mathrm{NP}\ Y \leq_p X$

$\mathrm{P} \subseteq \mathrm{NP}$ $\qquad$ $\mathrm{NPC} \subseteq \mathrm{NP}$

- Take any $X \in \mathrm{NP}$ and prove that it cannot be solved in poly time
  - You proved $\mathrm{P} \neq \mathrm{NP}$
- Take any $X \in \mathrm{NPC}$ and solve it in poly time
  - You proved $\mathrm{P} = \mathrm{NP}$

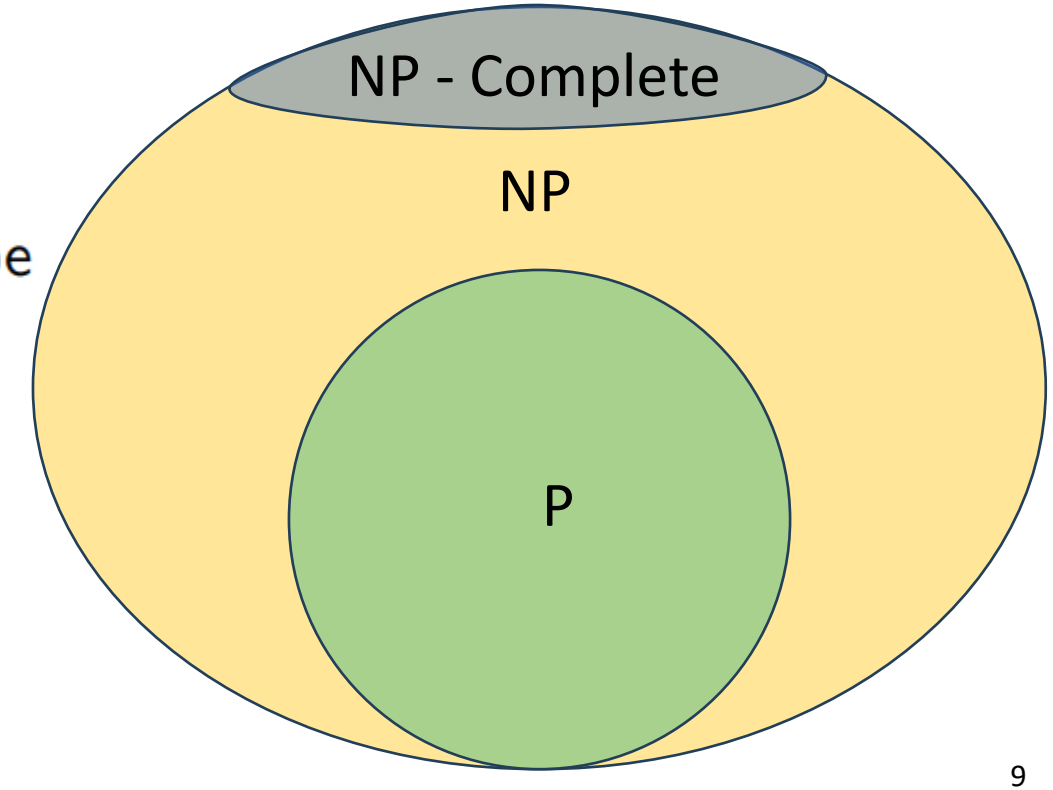

NP-Complete Problems

A problem X is **NP-Complete**, if

1. $X \in \mathrm{NP}$
2. $\forall\, Y \in \mathrm{NP}\ Y \leq_p X$

Why should you prove a problem to be NP-COMPLETE?

NP-Complete Problems

A problem X is **NP-Complete**, if

1. $X \in \mathrm{NP}$
2. $\forall\, Y \in \mathrm{NP}\ Y \leq_p X$

Why should you prove a problem to be NP-COMPLETE?

- Good evidence that it is hard
- Unless your interest is proving $\mathrm{P} = \mathrm{NP}$ stop trying finding efficient algorithm

NP-Complete Problems

A problem X is **NP-Complete**, if

1. $X \in \mathrm{NP}$
2. $\forall\, Y \in \mathrm{NP}\ Y \leq_p X$

Why should you prove a problem to be NP-COMPLETE?

- Good evidence that it is hard
- Unless your interest is proving $\mathrm{P} = \mathrm{NP}$ stop trying finding efficient algorithm

What to tell your boss if you fail to find a fast algorithm for a problem?

NP-Complete Problems

A problem X is **NP-Complete**, if

1. $X \in \mathrm{NP}$
2. $\forall\, Y \in \mathrm{NP}\ Y \leq_p X$

Why should you prove a problem to be NP-COMPLETE?

- Good evidence that it is hard
- Unless your interest is proving $\mathrm{P} = \mathrm{NP}$ stop trying finding efficient algorithm

What to tell your boss if you fail to find a fast algorithm for a problem?

1. I am too dumb! ▷ You are fired

NP-Complete Problems

A problem X is **NP-Complete**, if

1. $X \in \mathrm{NP}$
2. $\forall\, Y \in \mathrm{NP}\ Y \leq_p X$

Why should you prove a problem to be NP-COMPLETE?

- Good evidence that it is hard
- Unless your interest is proving $\mathrm{P} = \mathrm{NP}$ stop trying finding efficient algorithm

What to tell your boss if you fail to find a fast algorithm for a problem?

1. I am too dumb! ▷ You are fired
2. There is no fast algorithm! *You claim that* $\mathrm{P} \neq \mathrm{NP}$ ▷ Need a proof

NP-Complete Problems

A problem X is **NP-Complete**, if

1. $X \in \mathrm{NP}$
2. $\forall\, Y \in \mathrm{NP}\ Y \leq_p X$

Why should you prove a problem to be NP-COMPLETE?

- Good evidence that it is hard
- Unless your interest is proving $\mathrm{P} = \mathrm{NP}$ stop trying finding efficient algorithm

What to tell your boss if you fail to find a fast algorithm for a problem?

1. I am too dumb! ▷ You are fired
2. There is no fast algorithm! *You claim that* $\mathrm{P} \neq \mathrm{NP}$ ▷ Need a proof
3. I cannot solve it, but neither can anyone in the world! ▷ Need reduction

NP-Complete Problems

A problem X is **NP-Complete**, if

1. $X \in \mathrm{NP}$
2. $\forall\, Y \in \mathrm{NP}\ Y \leq_p X$

What to tell your boss if you fail to find a fast algorithm for a problem?

Dealing with Hard Problems

- What to do when we find a problem that looks hard...

I couldn't find a polynomial-time algorithm;
I guess I'm too dumb.

Dealing with Hard Problems

- Sometimes we can prove a strong lower bound... (but not usually)

I couldn't find a polynomial-time algorithm,
because no such algorithm exists!

Dealing with Hard Problems

- NP-completeness let's us show collectively that a problem is hard.

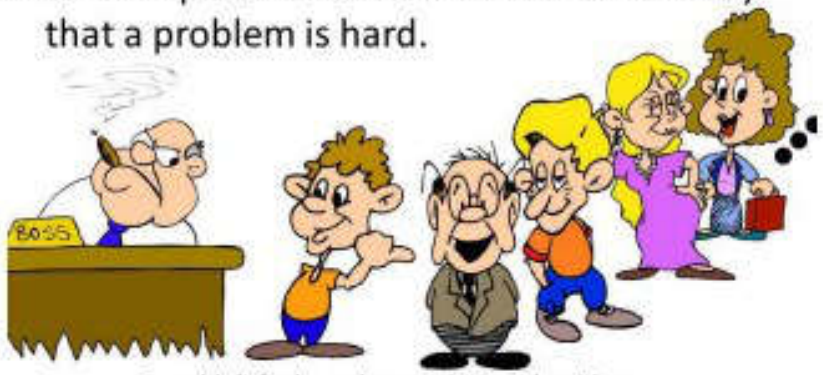

I couldn't find a polynomial-time algorithm,
but neither could all these other smart people.

Proving NP-Complete Problems

A problem X is **NP-Complete**, if

1. $X \in \mathrm{NP}$
2. $\forall\, Y \in \mathrm{NP}\ Y \leq_p X$

How to prove a problem NP-COMPLETE?

Proving NP-Complete Problems

A problem X is **NP-Complete**, if

1. $X \in \mathrm{NP}$
2. $\forall\, Y \in \mathrm{NP}\ Y \leq_p X$

How to prove a problem NP-COMPLETE?

Can we do so many reductions?

Proving NP-Complete Problems

A problem X is **NP-Complete**, if

1. $X \in \mathrm{NP}$
2. $\forall\, Y \in \mathrm{NP}\ Y \leq_p X$

To prove X NP-COMPLETE, reduce an NP-COMPLETE problem Z to X

Proving NP-Complete Problems

A problem X is **NP-Complete**, if

1. $X \in \mathrm{NP}$
2. $\forall\, Y \in \mathrm{NP}\ Y \leq_p X$

To prove X NP-COMPLETE, reduce an NP-COMPLETE problem Z to X

If Z is NP-COMPLETE, and

1. $X \in \mathrm{NP}$
2. $Z \leq_p X$

then X is NP-COMPLETE

Proving NP-Complete Problems

A problem X is **NP-Complete**, if

1. $X \in \mathrm{NP}$
2. $\forall\, Y \in \mathrm{NP}\ Y \leq_p X$

To prove X NP-COMPLETE, reduce an NP-COMPLETE problem Z to X

Where to begin? we need a first NP-COMPLETE Problem

Proving NP-Complete Problems

A problem X is **NP-Complete**, if

1. $X \in \mathrm{NP}$
2. $\forall\, Y \in \mathrm{NP}\ Y \leq_p X$

To prove X NP-COMPLETE, reduce an NP-COMPLETE problem Z to X

Theorem (The Cook-Levin theorem)

SAT(f) *is* NP-COMPLETE

- Proved by Stephen Cook (1971) and earlier by Leonid Levin (but became known later)
- Levin proved six NP-COMPLETE problems (in addition to other results)

Proving NP-Complete Problems

A problem X is **NP-Complete**, if

1. $X \in \mathrm{NP}$
2. $\forall\, Y \in \mathrm{NP}\ Y \leq_p X$

To prove X NP-COMPLETE, reduce an NP-COMPLETE problem Z to X

Theorem (The Cook-Levin theorem)

SAT(f) *is* NP-COMPLETE

CIRCUIT-SAT is NP-COMPLETE

What is Circuit SAT problem?

Circuit-SAT is the decision problem of determining whether a given Boolean circuit has an assignment of its inputs that makes the output ***TRUE***

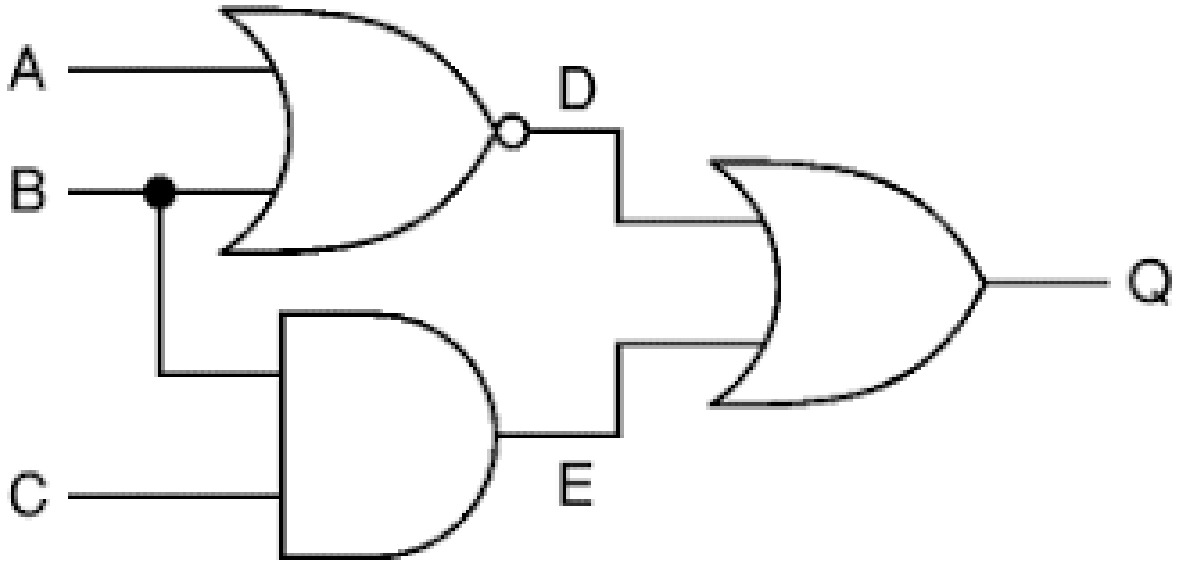

What is Circuit SAT problem?

Circuit-SAT is the decision problem of determining whether a given Boolean circuit has an assignment of its inputs that makes the output ***TRUE***

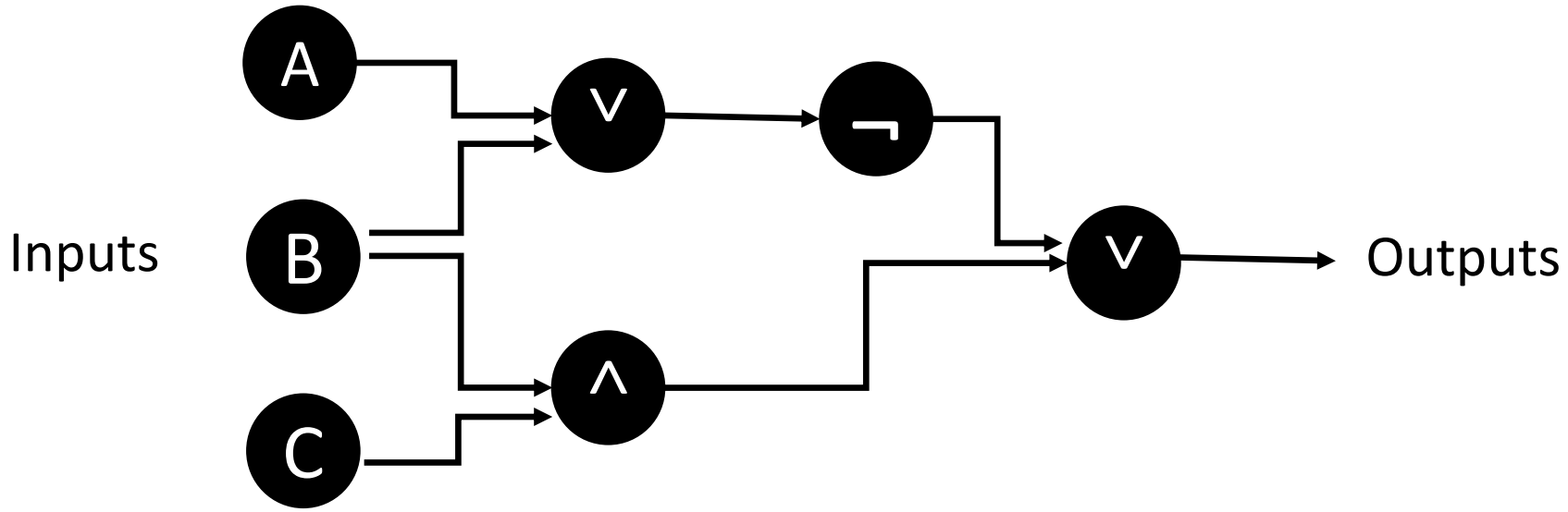

Claim: 3-Sat is NP-Complete

If Z is NP-COMPLETE, and

1. $X \in \mathrm{NP}$
2. $Z \leq_p X$

then X is NP-COMPLETE

1) **3-SAT** ϵ NP

Claim 3-Sat is NP-Complete

If Z is NP-COMPLETE, and
1. $X \in \mathrm{NP}$
2. $Z \leq_p X$

then X is NP-COMPLETE

1) 3-SAT ϵ NP

Certificate:

T or ***F*** for each variable

Verifier:

- Check cert has the right format
- Check that formula evaluates to T

Claim 3-Sat is NP-Complete

If Z is NP-COMPLETE, and
1. $X \in \mathrm{NP}$
2. $Z \leq_p X$

then X is NP-COMPLETE

1) **3-SAT** ϵ **NP**

2) **NP-Complete** $\leq_{\mathbf{p}}$ **3-SAT**

   Circuit-SAT $\leq_{\mathrm{p}}$ 3-SAT

Claim 3-Sat is NP-Complete

2) NP-Complete $\leq_p$ 3-SAT Circuit-SAT $\leq_p$ 3-SAT

Assign variable for every gate

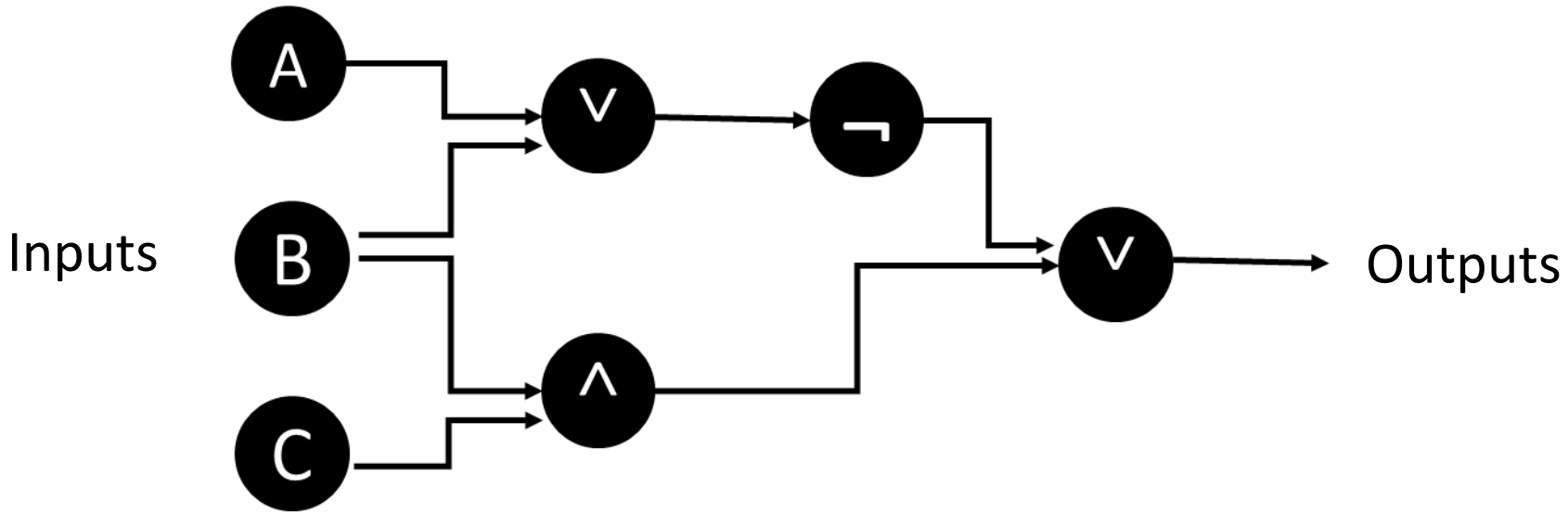

Claim 3-Sat is NP-Complete

2) NP-Complete $\leq_p$ 3-SAT Circuit-SAT $\leq_p$ 3-SAT

Assign variable for every gate

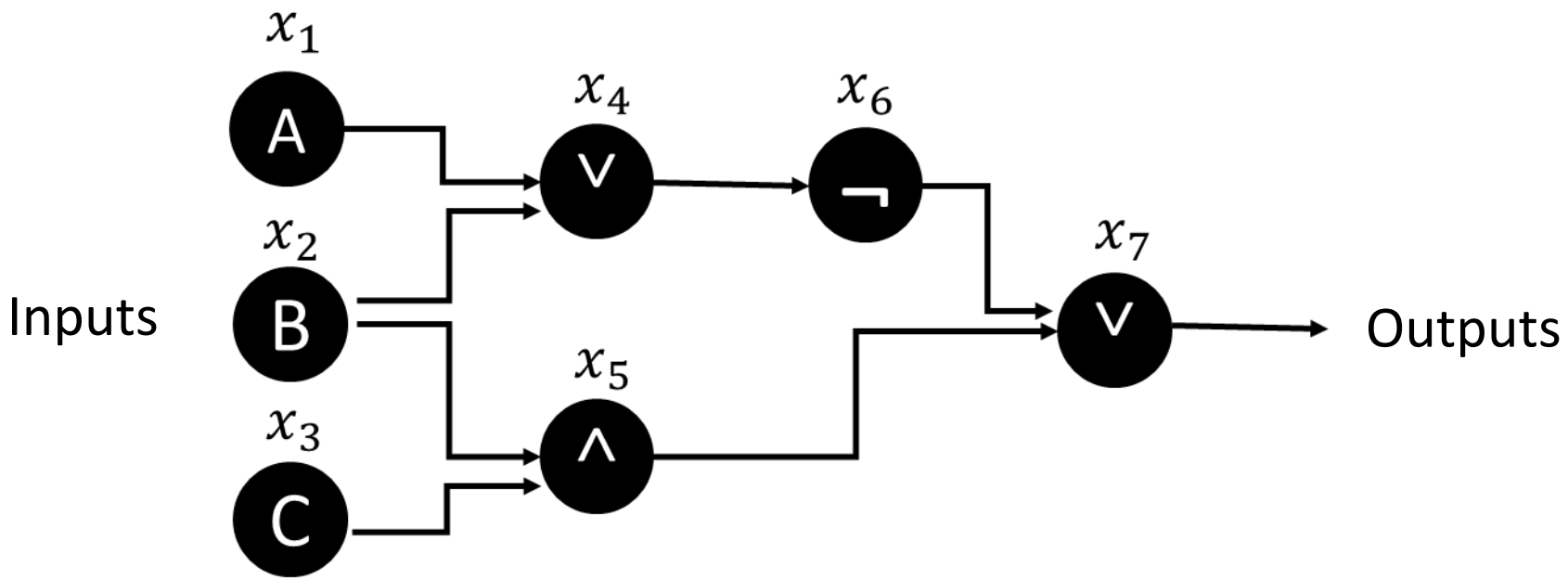

Claim 3-Sat is NP-Complete

2) NP-Complete $\leq_p$ 3-SAT Circuit-SAT $\leq_p$ 3-SAT

Assign variable for every gate

For each **NOT** gate:

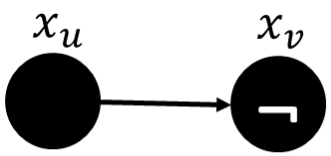

$$(x_u \vee x_v) \wedge (\overline{x_u} \vee \overline{x_v})$$

For each **OR** gate:

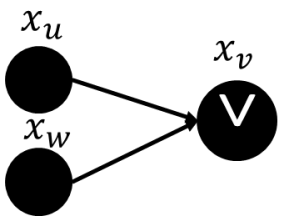

$$(x_v \vee \overline{x_u}) \wedge (x_v \vee \overline{x_w}) \wedge (\overline{x_v} \vee x_u \vee x_w)$$

For each **AND** gate:

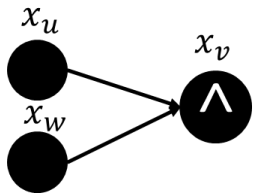

$$(\overline{x_v} \vee x_u) \wedge (\overline{x_v} \vee x_w) \wedge (x_v \vee \overline{x_u} \vee \overline{x_w})$$

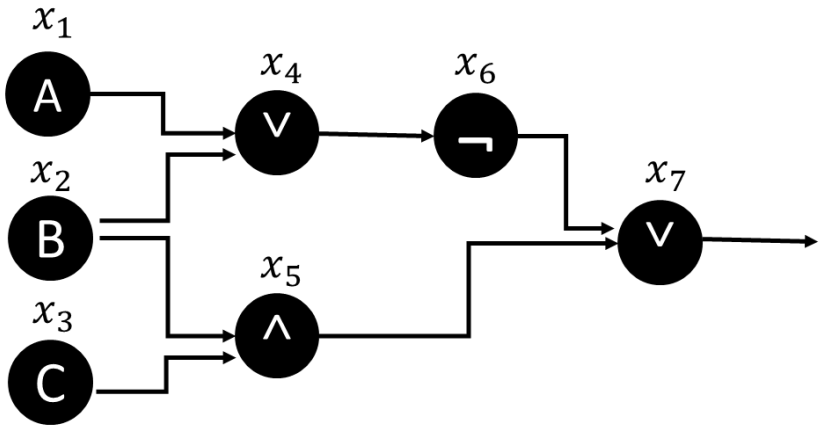

Claim 3-Sat is NP-Complete

2) NP-Complete $\leq_p$ 3-SAT Circuit-SAT $\leq_p$ 3-SAT

Assign variable for every gate

For each **NOT** gate:

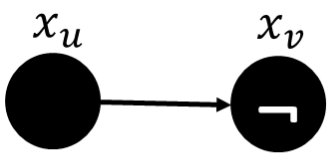

$$(x_u \vee x_v) \wedge (\overline{x_u} \vee \overline{x_v})$$

For each **OR** gate:

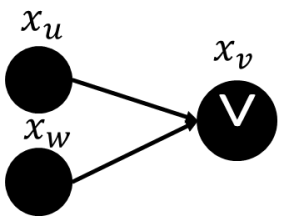

$$(x_v \vee \overline{x_u}) \wedge (x_v \vee \overline{x_w}) \wedge (\overline{x_v} \vee x_u \vee x_w)$$

For each **AND** gate:

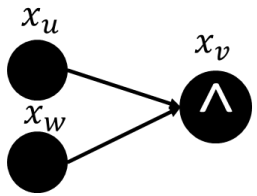

$$(\overline{x_v} \vee x_u) \wedge (\overline{x_v} \vee x_w) \wedge (x_v \vee \overline{x_u} \vee \overline{x_w})$$

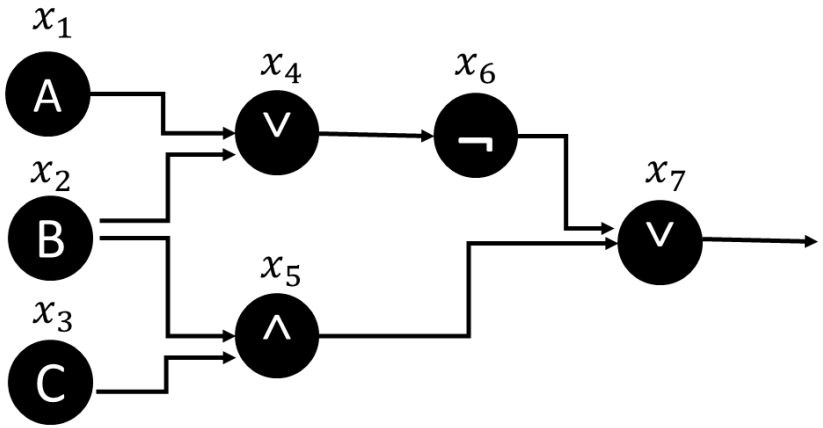

AND together clauses for every gate

Claim 3-Sat is NP-Complete

2) NP-Complete $\leq_p$ 3-SAT Circuit-SAT $\leq_p$ 3-SAT

Assign variable for every gate

For each **NOT** gate:

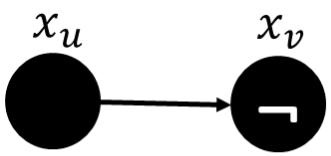

$$(x_u \vee x_v \vee \text{FALSE}) \wedge (\overline{x_u} \vee \overline{x_v} \vee \text{FALSE})$$

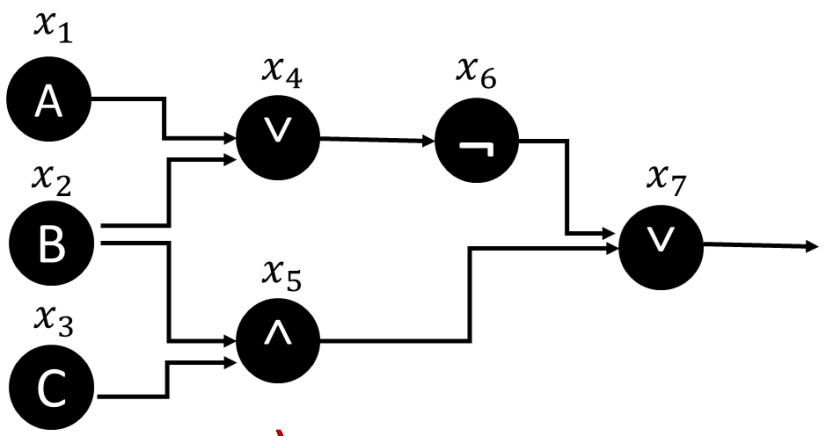

For each **OR** gate:

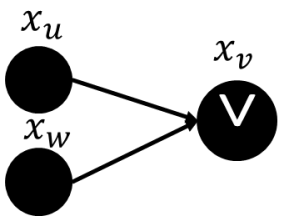

$$(x_v \vee \overline{x_u} \vee \text{FALSE}) \wedge (x_v \vee \overline{x_w} \vee \text{FALSE}) \wedge (\overline{x_v} \vee x_u \vee x_w)$$

For each **AND** gate:

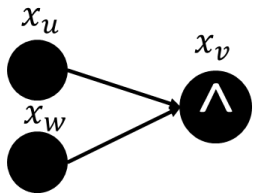

AND together clauses for every gate

$$(\overline{x_v} \vee x_u \vee \text{FALSE}) \wedge (\overline{x_v} \vee x_w \vee \text{FALSE}) \wedge (x_v \vee \overline{x_u} \vee \overline{x_w})$$

Claim 3-Sat is NP-Complete

2) NP-Complete $\leq_p$ 3-SAT Circuit-SAT $\leq_p$ 3-SAT

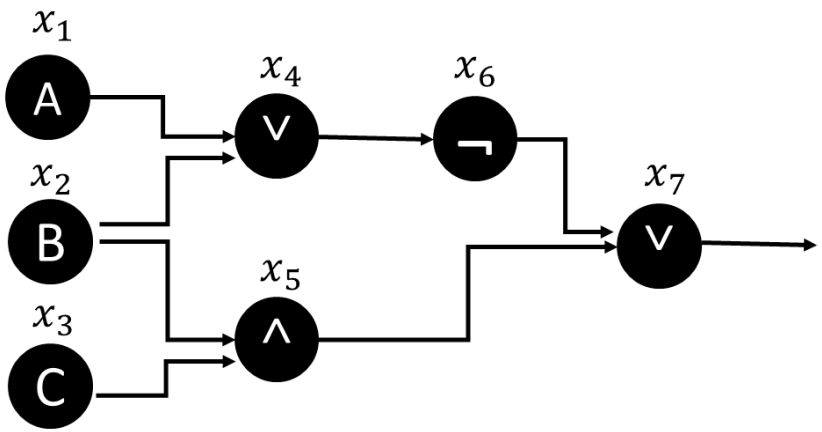

$$(x_4 \vee x_6 \vee \text{FALSE}) \wedge (\overline{x_4} \vee \overline{x_6} \vee \text{FALSE})$$

$$\wedge$$

$$(x_4 \vee \overline{x_1} \vee \text{FALSE}) \wedge (x_4 \vee \overline{x_2} \vee \text{FALSE}) \wedge (\overline{x_4} \vee x_1 \vee x_2)$$

$$\wedge$$

$$(\overline{x_5} \vee x_2 \vee \text{FALSE}) \wedge (\overline{x_5} \vee 3 \vee \text{FALSE}) \wedge (x_5 \vee \overline{x_2} \vee \overline{x_3})$$

$$\wedge$$

$$(x_7 \vee \overline{x_6} \vee \text{FALSE}) \wedge (x_7 \vee \overline{x_5} \vee \text{FALSE}) \wedge (\overline{x_7} \vee x_6 \vee x_5)$$

Thanks a lot

"In case I don't see you again,
Good Morning, **Good Afternoon** and **Good Evening**" – Jim Carry