Data Structures and Object Oriented Programming

Lecture 18

Dr. Naveed Anwar Bhatti

Webpage: naveedanwarbhatti.github.io

Types of Inheritance

Types of Inheritance

C++ supports six types of inheritance

- Single Inheritance
- Multiple Inheritance
- Multilevel Inheritance
- Hybrid Inheritance
- Hierarchical Inheritance
- Multipath Inheritance

Single Inheritance

"A derived class with only one base class is called **single inheritance**"

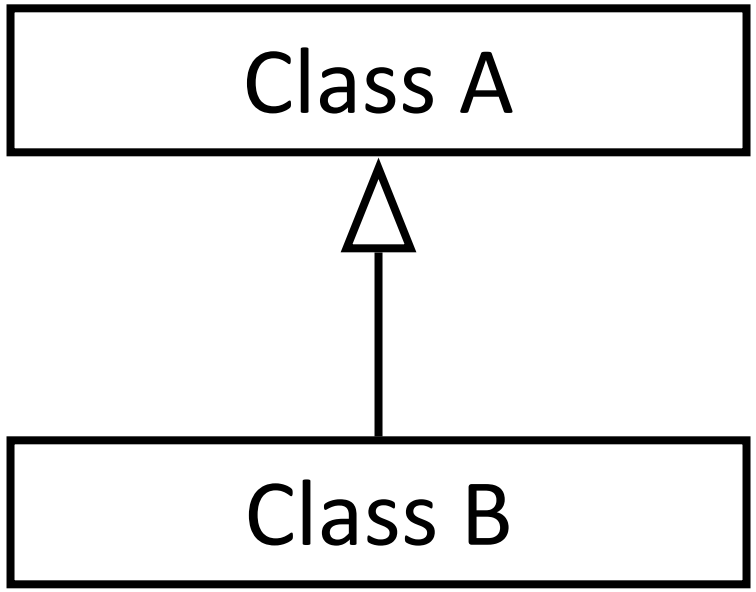

Inheritance (example)

```
#include <iostream>
using namespace std;

class Parent{
public:
    void myFunction()
    {
        cout << “Parent class“ << endl;
    }
};
```

```
class Child : public Parent {

};



int main() {
    Child myObj;
    myObj.myFunction();
    return 0;
}
```

Multilevel Inheritance

"A derived class with one base class and that base class is a derived class of another is called **multilevel inheritance**."

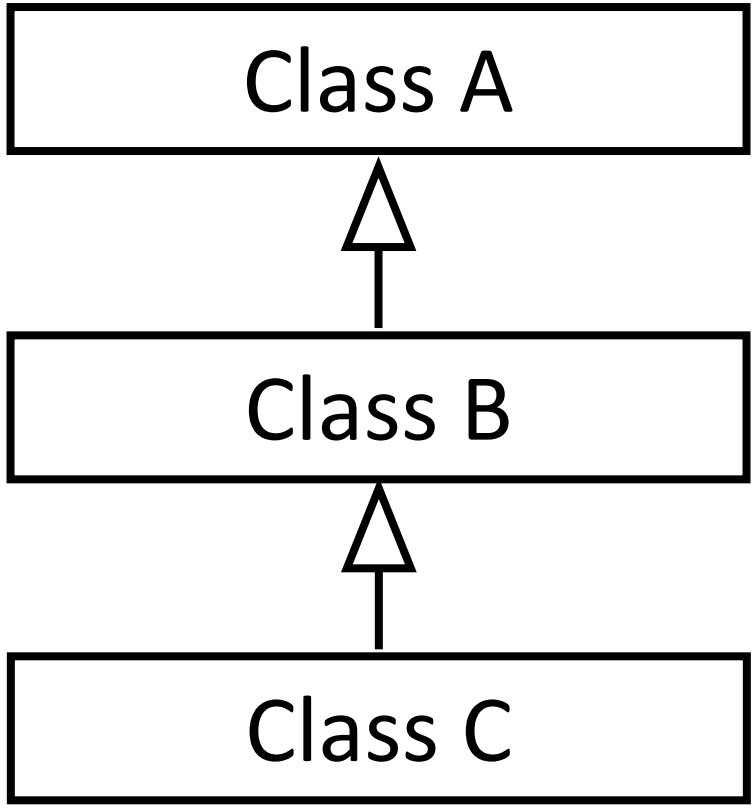

Multilevel Inheritance

```
class Grand_Parent {

public:
    void MyGrandParent()
    {
        cout << "Grand Parent class" << endl;
    }
};

class Parent : public Grand_Parent {

public:
    void MyParent()
    {
        cout << "Parent class" << endl;
    }
};
```

```
class Child : public Parent {
public:
    void Me()
    {
        cout << "Child class" << endl;
    }
};

int main() {
    Child myObj;
    myObj.MyGrandParent();
    myObj.MyParent();
    myObj.Me();

    return 0;
}
```

Microsoft Visual Studio Debug Console

```
Grand Parent class
Parent class
Child class
```

Multiple Inheritance

"A derived class with multiple base class is called **multiple inheritance**."

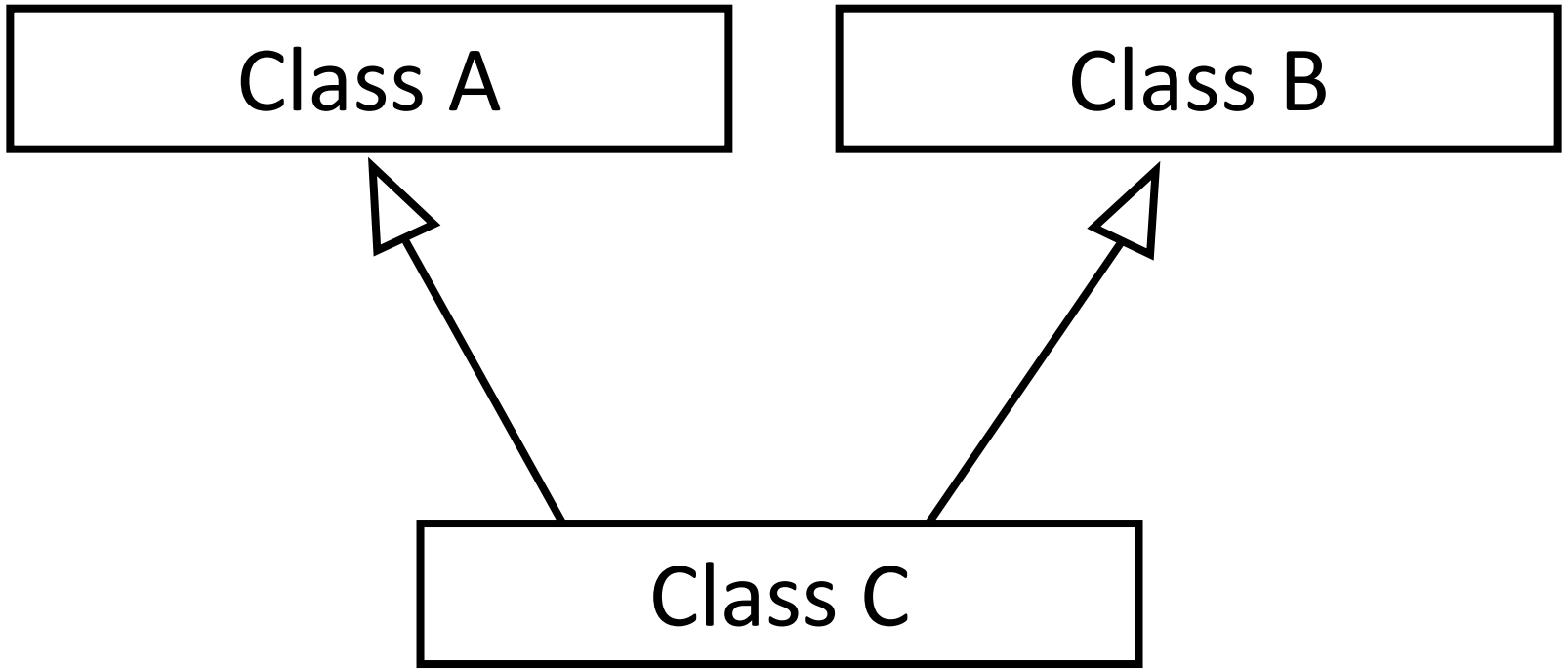

Multiple Inheritance (example)

```
class MyClass {
public:
    void myFunction() {
    cout << “class 1“ << endl;
   }
};

// Another base class
class MyOtherClass {
public:
    void myOtherFunction() {
    cout << “class 2" << endl;
    }
};
```

```
// Derived class
class MyChildClass : public MyClass, public MyOtherClass
{
};


 int main() {
     MyChildClass myObj;
     myObj.myFunction();
     myObj.myOtherFunction();
 return 0;
 }
```

Hybrid Inheritance

"Inheritance in which the derivation of a class involves both multilevel and multiple inheritance is called **hybrid inheritance**"

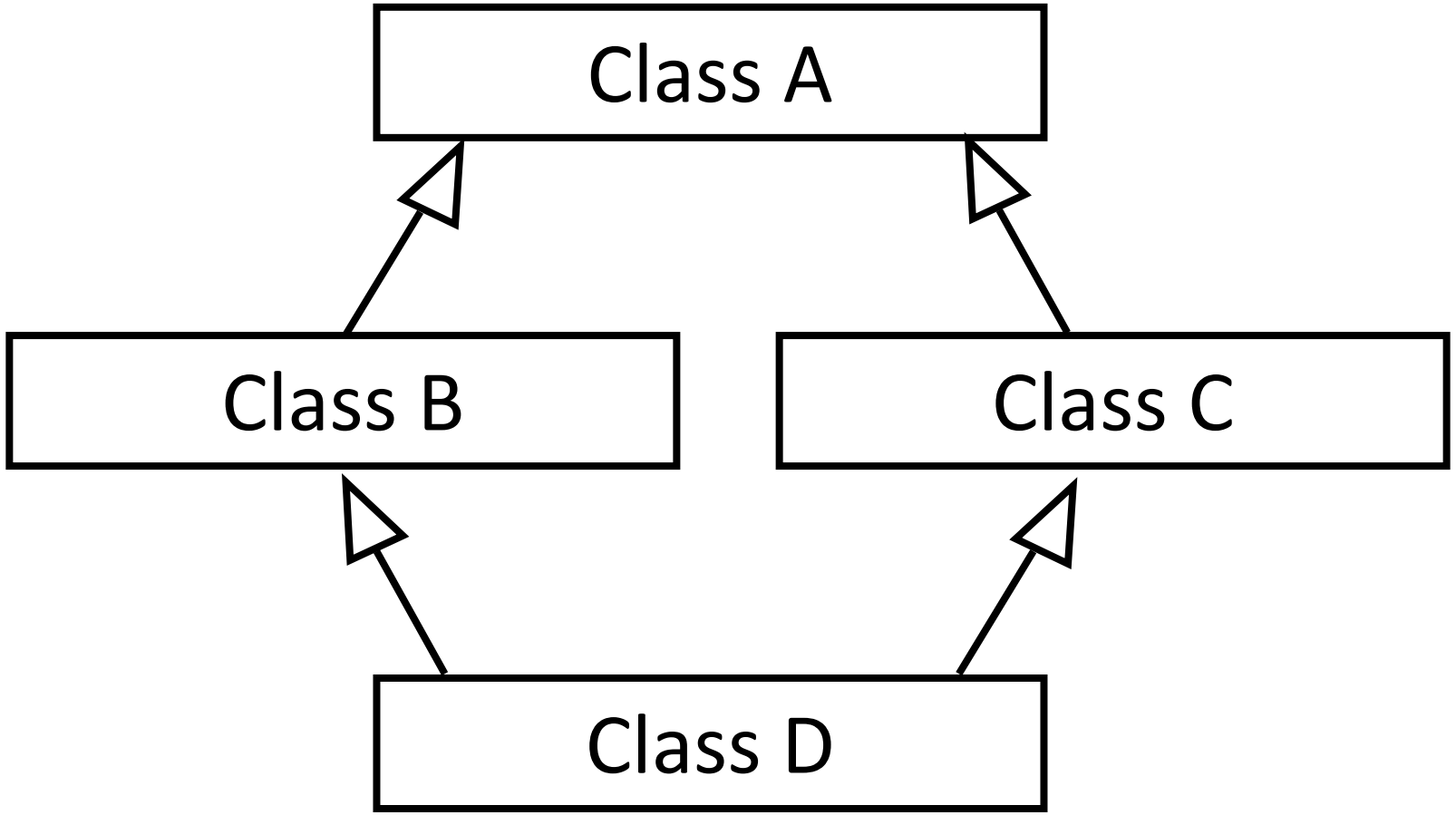

Inheritance (example)

```
class A
{
public:
    int x;
};

class B : public A
{
public:
    B()
    {
        x = 10;
    }
};
```

```
class C
{
public:
    int y;
    C() {
        y = 4;
    }
};
class D : public B, public C
{
public:
    void sum()
    {
        cout << "Sum= " << x + y;
    }
};
```

```
int main()
{
    D obj1;
    obj1.sum();
    return 0;
}
```

Other types of Inheritance

Hierarchal Inheritance

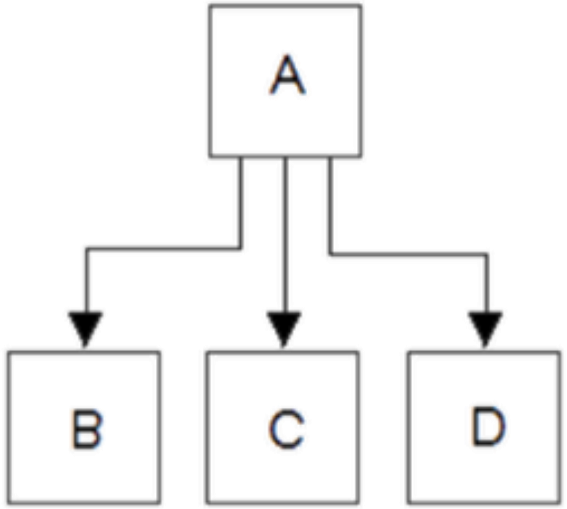

Multipath Inheritance

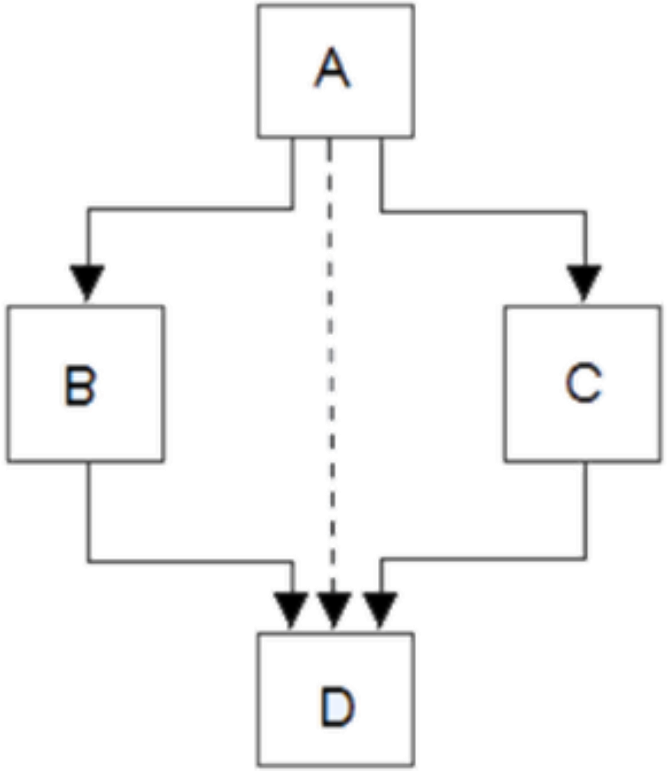

Thanks a lot

If you are taking a Nap, **wake up**.....Lecture Over