Shared by QualifyGate

MADE EASY

India's Best Institute for IES, GATE & PSUs

GATE 2018

Electrical Engineering

(Afternoon Session : 10-02-2018)

Click here for Detailed Solutions

- MADE EASY has taken due care in making solutions. If you find any discrepancy/ typo/technical error, kindly share/post your views.
- If you want to contest the answer key given by MADE EASY, kindly post your suggested answer with detailed explanations at MADE EASY facebook++.
- Students are requested to share their expected marks in GATE 2017.

www.madeeasy.in

Corporate Office: 44-A/1, Kalu Sarai, New Delhi - 110016 | **Ph:** 011-45124612, 9958995830

Delhi | Hyderabad | Noida | Bhopal | Jaipur | Lucknow | Indore | Pune | Bhubaneswar | Kolkata | Patna

Shared by QualifyGate

SECTION A : GENERAL APTITUDE

Q.1 For what values of k given below is $\frac{(k+2)^2}{k-3}$ an integer?

(a) 4, 8, 18
(b) 4, 10, 16
(c) 4, 8, 28
(d) 8, 26, 28

Ans. (c)

$$K = 4 \Rightarrow \frac{(4+2)^2}{4-3} = 36$$

$$K = 8 \Rightarrow \frac{(8+2)^2}{8-3} = \frac{100}{5} = 20$$

$$K = 28 \Rightarrow \frac{(28+2)^2}{28-3} = \frac{900}{25} = 36$$

Integers

So, option (c) $\Rightarrow$ 4, 8, 28

End of Solution

Q.2 "Since you have gone off the _____, the _____ sand is likely to damage the car". The words that best fill the blanks in the above sentence are

(a) course, coarse
(b) course, course
(c) coarse, course
(d) coarse, coarse

Ans. (a)

- Going off the course - not following the intended route.
- Coarse sand - harsh in texture

End of Solution

Q.3 The three roots of the equation $f(x) = 0$ are $x = \{-2, 0, 3\}$. What are the three values of x for which $f(x - 3) = 0$?

(a) –5, –3, 0
(b) –2, 0, 3
(c) 0, 6, 8
(d) 1, 3, 6

Ans. (d)

$$f(x) = 0$$
$$x = \{-2, 0, 3\}$$
$$f(-2) = 0 \ , \ f(0) = 0 \ , \ f(3) = 0$$
$$f(x - 3) = 0$$

1, 3, 6

$$f(1 - 3) = f(-2) = 0$$
$$f(3 - 3) = f(0) = 0$$
$$f(6 - 3) = f(3) = 0$$

End of Solution

Shared by QualifyGate

Q.4 Functions, $F(a, b)$ and $G(a, b)$ are defined as follows:

$F(a, b) = (a - b)^2$ and $G(a, b) = |a - b|$, where $|x|$ represents the absolute value of x.

What would be the value of $G(F(1, 3), G(1, 3))$?

(a) 2 (b) 4

(c) 6 (d) 36

Ans. (a)

$$F(a, b) = (a - b)^2$$

$$G(a, b) = |a - b|$$

$$\begin{aligned} G(F(1, 3)\ G(1, 3)) &= G((1 - 3)^2, |1 - 3|) \\ &= G(4, 2) \\ &= |4 - 2| = 2 \end{aligned}$$

End of Solution

Q.5 "A common misconception among writers is that sentence structure mirrors thought; the more _____ the structure, the more complicated the ideas".

The word that best fills the blank in the above sentence is

(a) detailed (b) simple

(c) clear (d) convoluted

Ans. (d)

End of Solution

Q.6 In a certain code AMCF is written as EQGJ and NKUF is written as ROYJ. How will DHLP be written in the code?

(a) RSTN (b) TLPH

(c) HLPT (d) XSVR

Ans. (c)

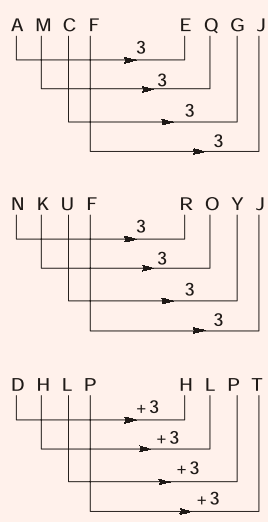

End of Solution

Shared by QualifyGate

Q.7 An e-mail password must contain three characters. The password has to contain one numeral from 0 to 9, one upper case and one lower case character from the English alphabet. How many distinct passwords are possible?

(a) 6,760
(b) 13,520
(c) 40,560
(d) 1,05,456

Ans. (c)

Numeral can be selected in 10 ways (0 - 9).
Each of upper case and lower case alphabhats can be done in 26 ways each.
All three choosen (1 numeral and 2 alphabat) can be arrange in 3! ways.
So, total number of ways will be $10 \times 26 \times 26 \times 3! = 40560$ ways

End of Solution

Q.8 A designer uses marbles of four different colours for his designs. The cost of each marble is the same, irrespective of the colour. The table below shows the percentage of marbles of each colour used in the current design. The cost of each marble increased by 25%. Therefore, the designer decided to reduce equal numbers of marbles of each colour to keep the total cost unchanged. What is the percentage of blue marbles in the new design?

Blue	Black	Red	Yellow
40%	25%	20%	15%

(a) 35.75
(b) 40.25
(c) 43.75
(d) 46.25

Ans. (c)

Assume number of marbles = 100
Cost of marbles increased = 25
New cost = Rs. 125

Number of marbles in Rs.100 = $\frac{100}{125} \times 100 = 80$ marbles

now, $(40 - x) + (25 - x) + (20 - x) + (15 - x) = 80$

$100 - 4x = 80$

$x = 5$

% blue marbles in new design = $\frac{(40-5)}{80} \times 100 = 35 \times \frac{5}{4} = 43.75\%$

End of Solution

Shared by QualifyGate

Q.9 P, Q, R and S crossed a lake in a boat that can hold a maximum of two persons, with only one set of oars. The following additional facts are available

(i) The boat held two persons on each of the three forward trips across lake and one person on each of the two return trips.

(ii) P is unable to row when someone else is in the boat.

(iii) Q is unable to row with anyone else except R.

(iv) Each person rowed for at least one trip.

(v) Only one person can row during a trip.

Who rowed twice?

(a) P (b) Q

(c) R (d) S

Ans. (c)

(i) Q and R moves first.
In forward trip Q rowed.
In return trip R rowed.

(ii) P and R moves in second trip
R rowed in forward trip
P rowed in return trip

(iii) P and S moves in last trip
S rowed in forward trip.
R rowed twice.

End of Solution

Q.10 A class of twelve children has two more boys than girls. A group of three children are randomly picked from this class to accompany the teacher on a field trip. What is the probability that the group accompanying the teacher contains more girls than boys?

(a) 0 (b) $\frac{325}{864}$

(c) $\frac{525}{864}$ (d) $\frac{5}{12}$

Ans. (b)

$$B + G = 12$$
$$B = G + 2$$
$$\Rightarrow \quad B = 7$$
$$G = 5$$

7 Boys and 5 Girls are there is 12 students. Among 3 students selected boys have to be more than girls.

So only two cases arise.

G	B
2	1
3	0

Shared by QualifyGate

As case (i) $GGG \rightarrow \frac{5}{12} \times \frac{5}{12} \times \frac{7}{12}$

case (ii) $\left.\begin{matrix} G & G & B \\ G & B & G \\ B & G & G \end{matrix}\right\} \rightarrow 3 \times \frac{5}{12} \times \frac{5}{12} \times \frac{5}{12}$

$$\text{Required prob.} = \left(\frac{5}{12}\right)^3 + 3\left(\frac{5}{12}\right)^2 \times \left(\frac{7}{12}\right)$$

$$= \frac{650}{1728} = \frac{325}{864} = 0.3761574 \approx 0.376$$

Alternative Method :

There are $7B$ and $5G$

Through as question is stating 3 students are taken at random.

This can be a possible way to approach it.

G	B
2	1
3	0

$$= \frac{{}^5C_2 + {}^7C_1 + {}^5C_3 + {}^7C_0}{{}^{12}C_3}$$

$$= \frac{10 \times 7 + 10 \times 1}{\frac{12 \times 10 \times 11}{6}} = \frac{80}{220} = \frac{4}{11} \approx 0.3636$$

End of Solution

Shared by QualifyGate

Regular and Weekend Classroom Courses for ESE 2019 & GATE 2019

MADE EASY

India's Best Institute for IES, GATE & PSUs

1 YEAR / 2 YEARS PROGRAMME

Regular & Weekend Batches Commencement Dates

Delhi
Regular Batches from 26th Feb, 2018
Weekend Batches from 17th Feb, 2018

Noida
Weekend Batches from 10th Feb, 2018

Indore
Regular Batches from 19th Feb, 2018

Pune
Regular Batches from 12th Feb, 2018

Patna
Regular Batches from 26th Feb, 2018

Lucknow
Regular Batches from 8th Mar, 2018

Hyderabad
Regular Batches from 19th Feb, 2018

Jaipur
Regular Batches from 18th Feb, 2018

Kolkata
Regular Batches from 15th Feb, 2018
Weekend Batches from 24th Feb, 2018

Bhubaneswar
Regular Batches from 15th Feb, 2018

Bhopal
Regular Batches from 15th Feb, 2018

ADMISSION OPEN at all Centres

MADE EASY Centres

Delhi	Hyderabad	Noida	Jaipur	Bhopal	Lucknow	Indore	Bhubaneswar	Pune	Kolkata	Patna
011-45124612	040-66774612	0120-6524612	0141-4024612	0755-4004612	09919111168	0731-4029612	0674-6999888,	020-26058612	033-68888880	0612-2356615

Shared by QualifyGate

SECTION B : TECHNICAL

Q.1 Consider a lossy transmission line with V_1 and V_2 as the sending and receiving end voltages, respectively. Z and X are the series impedance and reactance of the line, respectively. The steady-state stability limit for the transmission line will be

(a) greater than $\left|\frac{V_1 V_2}{X}\right|$

(b) less than $\left|\frac{V_1 V_2}{X}\right|$

(c) equal to $\left|\frac{V_1 V_2}{X}\right|$

(d) equal to $\left|\frac{V_1 V_2}{Z}\right|$

Ans. (b)

With only x:

$$P_{max} = \left|\frac{V_1 V_2}{x}\right|$$

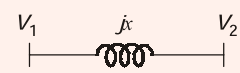

With Lossy Tr. Line

$$P = \left|\frac{V_1 V_2}{Z}\right|\cos(\beta - \delta) - \left|\frac{A V_2^2}{Z}\right|\cos(\beta - \alpha)$$

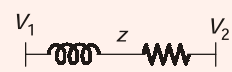

$\therefore$ With Lossy Line $P_{max} < \left|\frac{V_1 V_2}{x}\right|$

End of Solution

Q.2 Two wattmeter method is used for measurement of power in a balanced three-phase load supplied from a balanced three-phase system. If one of the wattmeters reads half of the other (both positive), then the power factor of the load is

(a) 0.532

(b) 0.632

(c) 0.707

(d) 0.866

Ans. (d)

In two Wattmeter method

$$\tan\phi = \frac{\sqrt{3}(W_1 - W_2)}{(W_1 + W_2)}$$

Given: $W_2 = \frac{W_1}{2}$

$$\tan\phi = \frac{\sqrt{3}\left(W_1 - \frac{W_1}{2}\right)}{\left(W_1 + \frac{W_1}{2}\right)}$$

$$\phi = 30^\circ$$

$$\cos\phi = \cos 30^\circ = 0.866$$

End of Solution

Shared by QualifyGate

Q.3 A continuous-time input signal $x(t)$ is an eigen function of an LTI system, if the output is

(a) $k\,x(t)$, where k is an eigenvalue.

(b) $k e^{j\omega t} x(t)$, where k is an eigenvalue and $e^{j\omega t}$ is a complex exponential signal.

(c) $x(t)\, e^{j\omega t}$, where $e^{j\omega t}$ is a complex exponential signal.

(d) $k\,H(\omega)$, where k is an eigenvalue and $H(\omega)$ is a frequency response of the system.

Ans. (a)

Eigen-function is a type of input for which output is constant times of input.
i.e.

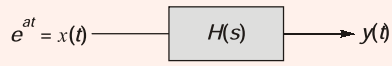

where $x(t)$ = system input = eigen-function

$H(s)$ = transfer function of system

$y(t)$ = system output

Here, $y(t) = H(s)|_{s=a}$ (eigen value) e^{at} (eigen-function)

$= K \,.\, x(t)$

where, K = eigen-value

$x(t)$ = eigen-function input

End of Solution

Q.4 In the logic circuit shown in the figure, Y is given by

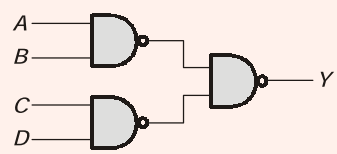

(a) $Y = ABCD$

(b) $Y = (A + B)(C + D)$

(c) $Y = A + B + C + D$

(d) $Y = AB + CD$

Ans. (d)

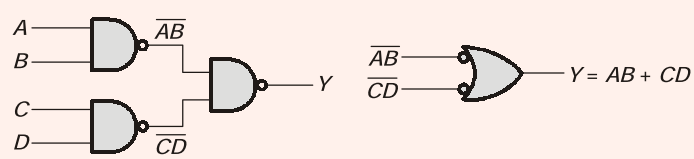

End of Solution

Q.5 The value of the directional derivative of the function $\phi(x, y, z) = xy^2 + yz^2 + zx^2$ at the point (2, –1, 1) in the direction of the vector $p = i + 2j + 2k$ is

(a) 1

(b) 0.95

(c) 0.93

(d) 0.9

Shared by QualifyGate

Ans. (a)

$$\phi = xy^2 + yz^2 + zx^2$$

$$\nabla\phi = \bar{i}\frac{\partial\phi}{\partial x} + \bar{j}\frac{\partial\phi}{\partial y} + \bar{k}\frac{\partial\phi}{\partial z}$$

$$= \bar{i}\left(y^2 + 2xz\right) + \bar{j}\left(2xy + z^2\right) + \bar{k}\left(2yz + x^2\right)$$

$$\nabla\phi_{(2,\,-1,\,1)} = \bar{i}(1+4) + \bar{j}(-4+1) + \bar{k}(-2+4)$$

$$= 5\bar{i} - 3\bar{j} + 2\bar{k}$$

$$\bar{P} = \bar{i} + 2\bar{j} + 2\bar{k}$$

$$|\bar{P}| = \sqrt{1+4+4} = 3$$

The directional derivative of $\phi(x, y, z)$ at (2, –1, 1) in the direction of $\bar{P}$ is $\nabla\phi_{\text{at } P} \cdot \frac{\bar{P}}{|\bar{P}|}$

$$= \left(5\bar{i} - 3\bar{j} + 2\bar{k}\right).\left(\frac{\bar{i} + 2\bar{j} + 2\bar{k}}{3}\right)$$

$$= \frac{5-6+4}{3} = 1$$

End of Solution

Q.6 Let f be a real valued function of a real variable defined as $f(x) = x - [x]$, where $[x]$ denotes the largest integer less than or equal to x. The value of $\int_{0.25}^{1.25} f(x)\,dx$ is _____(up to 2 decimal places).

Ans. (0.5)

$$\int_{0.25}^{1.25} f(x)\,dx = \int_{0.25}^{1} (x - [x])dx + \int_{1}^{1.25} (x - [x])\,dx$$

$$= \int_{0.25}^{1.25} (x\,dx) - \left[\int_{0.25}^{1} [x]dx + \int_{1}^{1.25} [x]dx\right]$$

$$= \left(\frac{x^2}{2}\right)\Bigg|_{0.25}^{1.25} - \left(\int_{0.25}^{1} 0\,dx + \int_{1}^{1.25} 1dx\right)$$

$$= \frac{(1.25)^2}{2} - \left(\frac{(0.25)^2}{2}\right) - (0 + 0.25)$$

$$= \frac{1}{2}\left[(1.5625 - 0.0625)\right] - 0.25 = 0.5$$

End of Solution

Shared by QualifyGate

Q.7 The waveform of the current drawn by a semi-converter from a sinusoidal AC voltage source is shown in the figure. If I_0 = 20 A, the rms value of fundamental component of the current is _____ A (up to 2 decimal places).

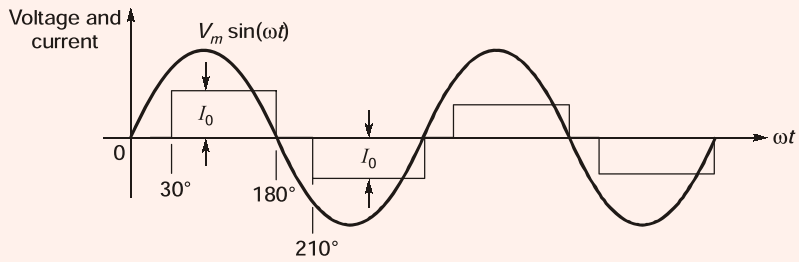

Ans. (17.39)

$$i_{s1} = \frac{4I_0}{\pi}\cos\frac{\alpha}{2}$$

$$I_{s1}(\text{rms}) = \frac{2\sqrt{2}}{\pi} I_0 \cdot \cos\frac{\alpha}{2}$$

$$= \frac{2\sqrt{2}}{\pi} \times 20 \times \cos\left(\frac{30°}{2}\right) = 17.39 \text{ A}$$

End of Solution

Q.8 The series impedance matrix of a short three-phase transmission line in phase coordinates is $\begin{bmatrix} Z_s & Z_m & Z_m \\ Z_m & Z_s & Z_m \\ Z_m & Z_m & Z_s \end{bmatrix}$. If the positive sequence impedance is (1 + j10) Ω, and the zero sequence is (4 + j31) Ω, then the imaginary part of Z_m (in Ω) is _____(up to 2 decimal places).

Ans. (7.00)

$$Z_1 = (1 + j10)\Omega$$
$$Z_0 = (4 + j31)\Omega$$

We know,

$$Z_1 = Z_s - Z_m$$
$$Z_0 = Z_s + 2Z_m$$

$$Z_1 - Z_0 = -3\,Z_m$$

$$Z_m = \frac{Z_0 - Z_1}{3}$$

$$= \frac{4 + j31 - 1 - j10}{3} = \frac{3 + j21}{3} = (1 + j7)$$

The imaginary part of Z_m is 7.00.

End of Solution

Shared by QualifyGate

MADE EASY

India's Best Institute for IES, GATE & PSUs

Rank Improvement Batches

for ESE 2019 & GATE 2019

"Failures are not meant to bow down, but they are for : to repeat, to improve and emerge as a winner"

These batches are designed for repeater students who have taken classroom coaching or prepared themselves and already attempted GATE/ESE Exams, but want to give next attempt for better result. The content of Rank Improvement batches are designed to give exposure for solving different types of questions within fixed time frame.

Features :

- Comprehensive problem solving sessions
- Smart techniques to solve problems
- Techniques to improve accuracy & speed
- Systematic & cyclic revision of all subjects
- Doubt clearing sessions
- Weekly class tests for performance improvement
- Inclusive of Interview guidance for PSUs
- **Specially designed workbooks for technical subjects**

Eligibility :

- Ex. MADE EASY students who have undergone classroom coaching from any centre of MADE EASY
- Students who have undergone classroom coaching from any other Institute
- Qualified in GATE Exam
- Qualified in ESE (Pre/ Mains) written exam
- Qualified in any PSU exam
- M. Tech from reputed colleges

SYLLABUS COVERED	COURSE DURATION	CLASS DURATION
Complete GATE syllabus & Technical syllabus of ESE	Approximately 5 months 450 - 475 teaching hours	5-6 days a week 4 hours a day

Streams	Timing	Date	Venue
CE	5:00 PM to 9:00 PM	**8th March, 2018**	Saket-2 (Delhi)
ME	5:00 PM to 9:00 PM	**8th March, 2018**	Ghitorni (Delhi)
EE	5:00 PM to 9:00 PM	**8th March, 2018**	Kalu Sarai (Delhi)
EC	5:00 PM to 9:00 PM	**8th March, 2018**	Saket-2 (Delhi)

FEE STRUCTURE		
Non-MADE EASY Students	Ex. MADE EASY Students	
	Those students who were enrolled in Postal study course, Rank Improvement, Conventional, GS, Post-GATE Batches	Those students who were enrolled in GATE / I+G+P batches
₹ 37,500	₹ 35,500	₹ 32,500

Note: Timing & Venue are subjected to periodic changes as per requirements. **These batches will be conducted at Delhi centre only**

Note 1 These batches will be focusing on solving problems and doubt clearing sessions. Therefore if a student is weak in basic concepts & fundamentals then he/ she is recommended to join regular classroom course.

Note 2 G.S & Online Test Series are NOT included in this course

ADMISSION OPEN

Documents Required

- 2 Photographs + Valid photo ID proof
- Documents required : M. Tech marksheet, PSUs/IES Interview call letter, GATE score card, MADE EASY I-card

011-45124612 www.madeeasy.in

Shared by QualifyGate

Q.9 In the two-port network shown, the h_{11} parameter $\left(\text{where, } h_{11} = \frac{V_1}{I_i}, \text{ when } V_2 = 0\right)$ in ohms is _____ (up to 2 decimal places).

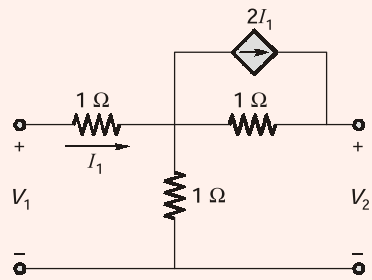

Ans. (0.5)

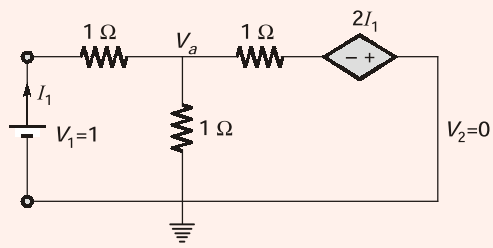

By KCL,

$$\frac{V_a - 1}{1} + \frac{V_a}{1} + \frac{V_a + 2I_1}{1} = 0$$

$$3V_a + 2I_1 = 1 \quad \text{...(i)}$$

$$I_1 = \frac{1 - V_a}{1} \quad \text{...(ii)}$$

Substitute equation (ii) in equation (i),

$$V_a = -1$$

$$I_1 = \frac{1 - V_a}{1} = \frac{1-(-1)}{1} = 2$$

$$h_{11} = \frac{V_1}{I_1} = \frac{1}{2} = 0.5\,\Omega$$

End of Solution

Q.10 The graph of a network has 8 nodes and 5 independent loops. The number of branches of the graph is

(a) 11
(b) 12
(c) 13
(d) 14

Shared by QualifyGate

Ans. (b)

$$\text{Loops} = b - (N - 1)$$
$$5 = b - (8 - 1)$$
$$5 = b - 7$$
$$b = 12$$

End of Solution

Q.11 In a salient pole synchronous motor, the developed reluctance torque attains the maximum value when the load angle in electrical degree is

(a) 0
(b) 45°
(c) 60°
(d) 90°

Ans. (b)

Salient pole synchronous motor power and torque relations per phase:

$$P = \frac{E_b V}{X_t} \cdot \sin\delta + \frac{V^2}{2}\left(\frac{X_d - X_q}{X_d X_q}\right)\sin(2\delta) \text{ Watts}$$

$$T = \frac{60}{2\pi N_S}\left[\frac{E_b V}{X_d}\sin\delta + \frac{V^2}{2}\left(\frac{X_d - X_q}{X_d X_q}\right)\sin 2\delta\right] \text{N-m}$$

The second term is reluctance power or reluctance torque, which is directly proportional to sin2δ.

∴ Reluctance torque will be maximum.

When, $\delta = 45°$

∵ $\sin 2(45°) \Rightarrow \sin 90° = 1$ (Maximum)

End of Solution

Q.12 Match the transfer functions of the second-order systems with the nature of the system given below.

Transfer functions	Nature of system
P. $\frac{15}{s^2 + 5s + 15}$	I. Overdamped
Q. $\frac{25}{s^2 + 10s + 25}$	II. Critically damped
R. $\frac{35}{s^2 + 18s + 35}$	III. Underdamped

(a) P-I, Q-II, R-III
(b) P-II, Q-I, R-III
(c) P-III, Q-II, R-I
(d) P-III, Q-I, R-II

Shared by QualifyGate

Ans. (c)

$$P = \frac{15}{s^2 + 5s + 15}$$

$$\omega_n = \sqrt{15} = 3.872 \text{ rad/sec.} \qquad \text{(Underdamped)}$$

$$2\xi \times 3.872 = 5$$

$$\xi = \frac{5}{2 \times 3.872} = 0.64$$

$$Q = \frac{25}{s^2 + 10s + 25}$$

$$\omega_n = \sqrt{25} = 5 \text{ rad/sec.} \qquad \text{(Critically damped)}$$

$$2\xi \times 5 = 10$$

$$\Rightarrow \quad \xi = 1$$

Observing all the options, option (c) is correct.

End of Solution

Q.13 A single-phase fully controlled rectifier is supplying a load with an anti-parallel diode as shown in the figure. All switches and diodes are ideal. Which one of the following is true for instantaneous load voltage and current?

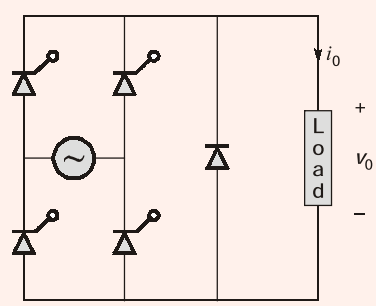

(a) $v_0 \geq 0$ and $i_0 < 0$
(b) $v_0 < 0$ and $i_0 < 0$
(c) $v_0 \geq 0$ and $i_0 \geq 0$
(d) $v_0 < 0$ and $i_0 \geq 0$

Ans. (c)

End of Solution

Q.14 A positive charge of 1 nC is placed at (0, 0, 0.2) where all dimensions are in meters. Consider the *x-y* plane to be a conducting ground plane. Take $\epsilon_0 = 8.85 \times 10^{-12}$ F/m. The *Z* component of the *E* field at (0, 0, 0.1) is closed to

(a) 899.18 V/m
(b) –899.18 V/m
(c) 999.09 V/m
(d) –999.09 V/m

Shared by QualifyGate

Ans. (d)

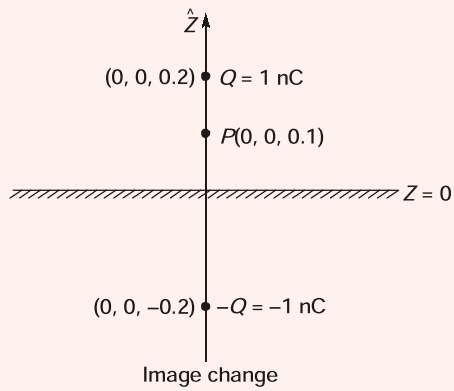

Net electric field at point P due to charge Q is,

$$\vec{E}_{12} = \frac{Q\vec{R}_{12}}{4\pi\varepsilon_0\left|\vec{R}_{12}\right|^3}$$

Total,

$$\vec{E}_{12} = \frac{1\times10^{-9}(-0.1\hat{a}_z)}{4\pi(8.854\times10^{-12})(0.1)^3} + \frac{(-1\times10^{-9})((0.3)\hat{a}_z)}{4\pi(8.854\times10^{-12})(0.3)^3}$$

$$= \left[\frac{-10^5}{4\pi(8.854)} - \frac{10^5}{4\pi(8.854)9}\right]\hat{a}_z$$

$$= (-898.774 - 99.863)\hat{a}_z \cong -999.09\,\hat{a}_z \text{ V/m}$$

End of Solution

Q.15 Consider a unity feedback system with forward transfer function given by

$$G(s) = \frac{1}{(s+1)(s+2)}$$

The steady-state error in the output of the system for a unit-step input is _____ (upto 2 decimal places.

Ans. (0.66)

Steady-state error for type-0 and step input,

$$e_{ss} = \frac{1}{1+k_p}$$

$$k_p = \lim_{s\to0}\frac{1}{(s+1)(s+2)} = \frac{1}{2}$$

$$e_{ss} = \frac{1}{1+\frac{1}{2}} = \frac{2}{3} = 0.66 \text{ units}$$

End of Solution

Shared by QualifyGate

Q.16 Consider a non-singular 2 × 2 square matrix A. If trace (A) = 4 and trace (A^2) = 5, the determinant of the matrix A is _____ (upto 1 decimal place).

Ans. (5.5)

A is 2 × 2 matrix

$$Tr\ A = 4$$
$$\lambda_1 + \lambda_2 = 4$$
$$tr\,(A^2) = 5$$
$$\lambda_1^2 + \lambda_2^2 = 5$$
$$(\lambda_1 + \lambda^2)^2 = \lambda_1^2 + \lambda_2^2 + 2\lambda_1\lambda_2$$
$$16 = 5 + 2\lambda_1\lambda_2$$
$$2\lambda_1\lambda_2 = 11$$
$$\lambda_1\lambda_2 = \frac{11}{2}$$
$$|A| = \frac{11}{2} = 5.5$$

End of Solution

Q.17 A 1000 × 1000 bus admittance matrix for an electric power system has 8000 non-zero elements. The minimum number of branches (transmission lines and transformers) in this system are _____ (upto 2 decimal places).

Ans. (3500)

Number of buses = 1000

No. of non-zero element = 8000

$$\%\ \text{sparsity} = \%x = \frac{\text{Number of zero element}}{\text{Total number of elements}}$$
$$= \frac{10^6 - 8000}{10^6} = 0.992$$
$$\text{Number of Tr-lines} = \frac{N^2(1-x) - N}{2}$$
$$= \frac{1000^2(1-0.992) - 1000}{2} = 3500$$

End of Solution

Shared by QualifyGate

MADE EASY

India's Best Institute for IES, GATE & PSUs

ESE-2018 Mains Batches

Conventional Questions Practice Program + Mains Offline Test Series

Mains batches are exclusively designed for practice of conventional questions for ESE-2018. Although the syllabus of ESE pre & mains is well covered in classroom course, but still interested candidates can enroll in these batches to develop additional skills in order to excel in main examination. The approach followed in these batches are very beneficial to improve answer writing skills and special emphasis is given on presentation of answers. These batches are supplemented by well-designed ESE-2018 mains offline test series as per UPSC-QCAB pattern.

Key Features

- Very useful to develop numerical solving approach & improving writing skills.
- Discussion on probable questions.
- Helps to develop step by step question solving approach.
- Comprehensive and in-depth discussion on collection of conventional questions, thus strengthening fundamental concepts.
- Special focus on improving answer layout specially for theory questions.
- Classes will be delivered by senior faculties.
- **Updated Mains workbook for every subject having varied practice question sets (unsolved and solved).**
- Test series will be conducted on every Sunday in synchronisation with the syllabus taught in classes.

Batch Details

COURSE DURATION	CLASS DURATION	TEST SERIES
70 to 80 days | 250-300 hours	5-6 days a week and 6-7 hours a day	Every Sunday evening

Streams	Centre (Delhi)	Batch Type	Date	Timings
ME	Ghitorni Centre	Regular	5th March, 2018	7:30 AM to 1:30 PM
CE	Kalu Sarai	Regular	Batches Commencing from 25th February, 2018	7:30 AM to 1:30 PM
EE	Kalu Sarai (Choudhary House)	Regular		7:30 AM to 1:30 PM
E & T	Lado Sarai Centre	Regular		7:30 AM to 1:30 PM

Program	Commencing Date	Ex. MADE EASY Students (Enrolled in Postal, Rank Improvement, Conventional, GS, Post-GATE, GATE, I+G+P Batches)	Non MADE EASY students
Mains Exclusive Batch Inclusive of Mains Classroom Test Series for ESE-2018	25th February, 2018	₹ 12,500	₹ 16,500
Mains Test Series (Offline/Online)	18th March, 2018	₹ 2,000	₹ 3,000

ADMISSION OPEN

44-A/1, Kalu Sarai, Sarvapriya Vihar, New Delhi - 110016

Documents Required

- 2 Photographs + Valid photo ID proof
- Ex MADE EASY students should produce their MADE EASY ID card

011-45124612

www.madeeasy.in

Note : These batches will be conducted at Delhi centre only

Shared by QualifyGate

Q.18 In the figure, the voltages are $v_1(t) = 100\cos(\omega t)$, $v_2(t) = 100\cos\left(\omega t + \frac{\pi}{18}\right)$ and $v_3(t) = 100\cos\left(\omega t + \frac{\pi}{36}\right)$. The circuit is in sinusoidal steady-state, and $R << \omega L$. P_1, P_2 and P_3 are the average power outputs. Which one of the following statements is true?

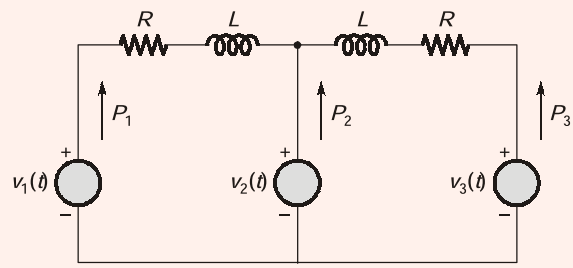

(a) $P_1 = P_2 = P_3 = 0$
(b) $P_1 < 0, P_2 > 0, P_3 > 0$
(c) $P_1 < 0, P_2 > 0, P_3 < 0$
(d) $P_1 > 0, P_2 < 0, P_3 > 0$

Ans. (c)

$$V_2 : \frac{\pi}{18} = \frac{180°}{18} = 10°$$

$$V_3 : \frac{\pi}{36} = \frac{180°}{36} = 5°$$

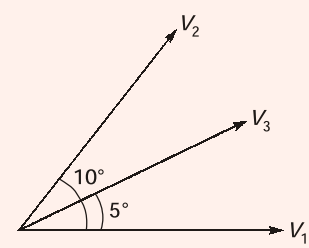

V_2 leads V_1 and V_3.
So, V_2 is a source, V_1 and V_3 are absorbing. Hence,
$P_2 > 0$, $P_1, P_3 < 0$

End of Solution

Q.19 The op-amp shown in the figure is ideal. The input impedance V_{in}/i_{in} is given by

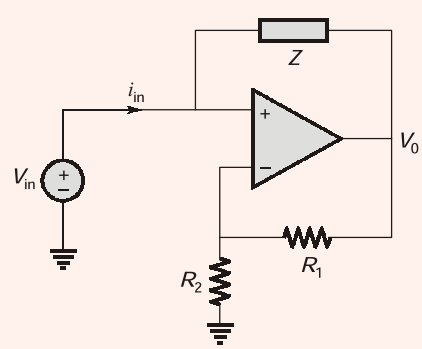

(a) $Z\frac{R_1}{R_2}$
(b) $-Z\frac{R_2}{R_1}$
(c) Z
(d) $-Z\frac{R_2}{R_1 + R_2}$

Shared by QualifyGate

Ans. (b)

According to virtual ground,

$$V_A = V_B = V_{in}$$

At node A,

$$\frac{V_{in} - V_0}{Z} = i_{in} \quad \text{...(i)}$$

$$V_{in}\left[\frac{1}{R_2} + \frac{1}{R_1}\right] = \frac{V_0}{R_1}$$

$$V_{in}\left[\frac{R_1 + R_2}{R_1 R_2}\right] \times R_1 = V_0$$

$$V_0 = V_{in} \times \left[\frac{R_1 + R_2}{R_2}\right] \quad \text{...(ii)}$$

Equation (ii) in equation (i),

$$\frac{V_{in} - V_0}{Z} = i_{in}$$

$$\frac{V_{in} - V_{in}\left[\frac{R_1 + R_2}{R_2}\right]}{Z} = i_{in}$$

$$\frac{V_{in}}{i_{in}}\left[1 - \frac{R_1 + R_2}{R_2}\right] = Z$$

$$\frac{V_{in}}{i_{in}}\left[\frac{R_2 - R_1 + R_2}{R_2}\right] = Z$$

$$\frac{V_{in}}{i_{in}} = -Z \cdot \frac{R_2}{R_1}$$

End of Solution

Q.20 The value of the integral $\oint \frac{z+1}{z^2 - 4} dz$ in counter clockwise direction around a circle C of radius 1 with center at the point $z = -2$ is

(a) $\frac{\pi i}{2}$

(b) $2\pi i$

(c) $-\frac{\pi i}{2}$

(d) $-2\pi i$

Shared by QualifyGate

Ans. (a)

$$\int \frac{z+1}{z^2-4}\,dz$$

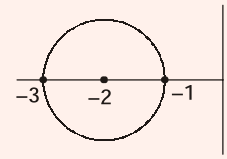

$$\int \frac{z+1}{(z-2)(z+2)}\,dz$$

$$\int \frac{\left(\frac{z+1}{z-2}\right)}{(z+2)}\,dz$$

where, $f(z) = \dfrac{z+1}{z-2}$

$$= 2\pi i\, f(-2)$$

$$= 2\pi i\left(\frac{-2+1}{-2-2}\right)$$

$$= 2\pi i\left(\frac{-1}{-4}\right) = \frac{\pi i}{2}$$

End of Solution

Q.21 The positive, negative and zero sequence impedances of a 125 MVA, three-phase, 15.5 kV, star-grounded, 50 Hz generator are *j*0.1 pu, *j*0.05 pu and *j*0.01 pu respectively on the machine rating base. The machine is unloaded and working at the rated terminal voltage. If the grounding impedance of the generator is j0.01 pu, then the magnitude of fault current for a *b*-phase to ground fault (in kA) is _____ (upto 2 decimal places).

Ans. (73.52)

For LG fault,

$$I_{f_{Pu}} = \frac{3.V_{Th}}{z_1+z_2+z_0+3z_n}$$

$$= \frac{3\times 1}{0.1+0.05+0.01+3(0.01)}$$

$$= 15.789 \text{ Pu}$$

$$I_{base} = \frac{P}{\sqrt{3}.V_L} = \frac{125\times 10^6}{\sqrt{3}\times 15.5\times 10^3} = 4656.05 \text{ A}$$

$$I_f = I_{f_{Pu}} \times I_{base} = 15.789 \times 4656.05$$

$$= 73516.538 = 73.52 \text{ kA}$$

End of Solution

Shared by QualifyGate

Q.22 Four power semiconductor devices are shown in the figure along with their relevant terminals. The device(s) that can carry dc current continuously in the direction shown when gated appropriately is (are)

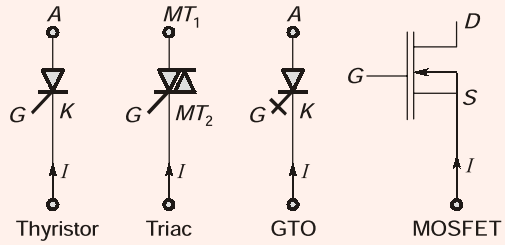

(a) Triac only
(b) Triac and MOSFET
(c) Triac and GTO
(d) Thyristor and Triac

Ans. (a)

End of Solution

Q.23 Let f be a real-valued function of a real variable defined as $f(x) = x^2$ for $x \geq 0$, and $f(x) = -x^2$ for $x < 0$. Which one of the following statements is true?

(a) $f(x)$ is discontinuous at $x = 0$.
(b) $f(x)$ is continuous but not differentiable at $x = 0$.
(c) $f(x)$ is differentiable but its first derivative is not continuous at $x = 0$.
(d) $f(x)$ is differentiable but its first derivative is not differentiable at $x = 0$.

Ans. (d)

$$f(x) = \begin{cases} x^2 & x \geq 0 \\ -x^2 & x < 0 \end{cases}$$

$$f'(x) = \begin{cases} 2x & x \geq 0 \\ -2x & x < 0 \end{cases}$$

$$f''(x) = \begin{cases} 2 & x \geq 0 \\ -2 & x < 0 \end{cases}$$

The first derivation of f (i.e) $f'(x)$ is not derivable at $x = 0$.

End of Solution

Q.24 A single-phase 100 kVA, 1000 V/100 V, 50 Hz transformer has a voltage drop of 5% across its series impedance at full load. Of this, 3% is due to resistance. The percentage regulation of the transformer at full load with 0.8 lagging power factor is

(a) 4.8
(b) 6.8
(c) 8.8
(d) 10.8

Shared by QualifyGate

Ans. (a)

$$\text{Percent voltage regulation} = \left(\frac{I_2 R_{02}}{E_2} \times 100\right)\cos\phi_2 \pm \left(\frac{I_2 X_{02}}{E_2} \times 100\right)\sin\phi_2$$

$$\%\ \text{V.R.} = V_r \cos\phi_2 \pm V_x \sin\phi_2$$

(where, '+' lag p.f. and '–' lead p.f.)

At full load:

Given, $V_r = 3\%$

Impedance drop, $V_z = 5\%$

$\therefore$ Reluctance drop, $V_x = \sqrt{5^2 - 3^2} = 4\%$

Voltage regulation at full load at 0.8 p.f. lagging

$$\text{V.R.} = 3(0.8) + 4(0.6)$$
$$= 2.4 + 2.4 = 4.8\%$$

End of Solution

Q.25 A separately excited dc motor has an armature resistance $R_a = 0.05\ \Omega$. The field excitation is kept constant. At an armature voltage of 100 V, the motor produces a torque of 500 Nm at zero speed. Neglecting all mechanical losses, the no-load speed of the motor (in radian/s) for an armature voltage of 150 V is _____ (upto 2 decimal places).

Ans. (150)

Given, separately initiated DC motor.

Field excitation is constant,

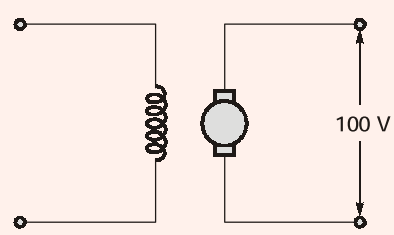

Producing a torque of 500 N-m

At zero speed,

$\because$ $N = 0, \quad E_b = 0$

$$E_b = V - I_a R_a$$

$\therefore$ $0 = 100 - I_a(0.05)$

$\therefore$ $$I_{a1} = \frac{100}{0.05} = 2000\ \text{A}$$

$$T = \frac{60}{2\pi N} E_b I_a = \frac{60}{2\pi N}\frac{\phi ZNP}{60\ \text{A}} \cdot I_a$$

Let, $$T_1 = \frac{1}{2\pi}\frac{ZP}{A}\phi I_{a1}\ \text{N-m}$$

Let, $T_1 = kI_{a1}$ where, $k = \frac{1}{2\pi}\frac{ZP\phi}{A}$

Shared by QualifyGate

$$T_1 = 500 \text{ N-m}, \; I_{a1} = 2000 \text{ A}$$

$$k = \frac{500}{2000} = 0.25$$

When motor runs on no-load given all mechanical losses neglected. No-load current is negligible and the voltage drop at no-load can be neglegible.

$\therefore$ $$E_b \simeq V = 150 \text{ V}$$

$$E_b = \frac{\phi ZNP}{60A}$$

Already solved, $$k = \frac{1}{2\pi}\left(\frac{ZP\phi}{A}\right)$$

$\therefore$ $$\frac{ZP\phi}{A} = 2\pi(k)$$

$\therefore$ $$E_b = 2\pi(k)\cdot\frac{N}{60}$$

$\therefore$ $$E_b = k \cdot \omega$$ (ω : No-load speed in rad/sec.)

$\therefore$ $$\omega = \frac{E_b}{k}$$

$\therefore$ $$\omega = \frac{150}{0.25} = 600 \text{ rad/sec.}$$

End of Solution

Q.26 A transformer with toroidal core of permeability μ is shown in the figure. Assuming uniform flux density across the circular core cross-section of radius $r << R$, and neglecting any leakage flux, the best estimate for the mean radius R is

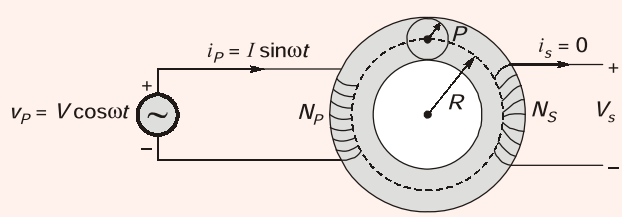

(a) $\dfrac{\mu V r^2 N_p^2 \omega}{I}$

(b) $\dfrac{\mu I r^2 N_P N_S \omega}{V}$

(c) $\dfrac{\mu V r^2 N_P^2 \omega}{2I}$

(d) $\dfrac{\mu I r^2 N_P^2 \omega}{2V}$

Shared by QualifyGate

Ans. (d)

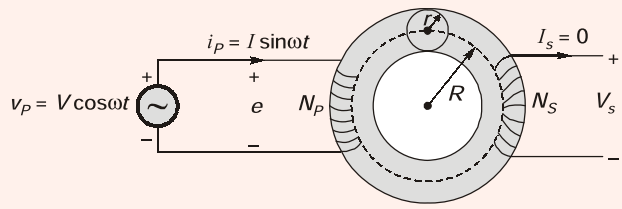

Since we know reluctance of core:

$$\Re = \frac{l_c}{\mu a}$$

Here, l_c = mean core length: a = area of core

Reluctance, $$\Re = \frac{2\pi R}{\mu \times \pi r^2} = \frac{2R}{\mu r^2}$$ [where, R = mean radius of core]

or $$R = \frac{\Re \cdot \mu r^2}{2}$$

and $$\Re = \frac{\text{mmf}}{\text{flux}} = \frac{N_p I_p}{\phi}$$

Here, $$\phi = -\frac{1}{N_p}\int_0^t e\,dt$$ [where e is primary generated voltage]

or, $$\phi = -\frac{1}{N_p}\int_0^t -(V_p)\,dt$$ [$\because$ since, $V_p = -e$]

$$\phi = \frac{1}{N_p}\int_0^t V\cos\omega t\,dt = \frac{V}{\omega N_p}\sin\omega t$$

Now reluctance, $$\Re = \frac{N_p . I \sin\omega t}{\frac{V}{\omega N_p}\sin\omega t} = \frac{N_p^2 . \omega I}{V}$$

So mean radius, $$R = \frac{N_p^2 \times \omega I \times \mu r^2}{2V}$$

End of Solution

Shared by QualifyGate

MADE EASY

India's Best Institute for IES, GATE & PSUs

National Scholarship Test (NST)

For GATE 2019 & ESE 2019 Aspirants

As it is rightly said, "An unfulfilled vocation drains the colour from a man's existence". Every budding engineer and engineering graduates dream about engineering service examination, public sectors, IITs, etc but often these sharp minds have to take step back due to unfavourable economic conditions. MADE EASY has taken an initiative to acknowledge these talented students by giving scholarship for coaching guidance and thereby assisting them in accomplishing their dreams. MADE EASY will provide scholarship worth Rs.5 crores for those students who wish to enroll in classroom courses for ESE-2019 and GATE-2019.

Category	Scholarship % in Tuition fee
A	100%
B	75%
C	50%
D	25%
E	10%

Scholarship will vary from 10% to 100% in tuition fee, based on merit list.

Avail Scholarship Worth

Rs. 5 Crores

NST 2

11 Mar, 2018

for batches commencing from Apr, 2018 to Jul, 2018

NST-2 : Test Centres

Agra, Ahmedabad, Allahabad, Amrawati, Bangalore, Bhilai, Bhopal, Bhubaneswar, Chandigarh, Chennai, Dehradun, Delhi, Dhanbad, Ghaziabad, Gorakhpur, Greater Noida , Gurgaon, Gwalior, Hyderabad, Indore, Jabalpur, Jaipur, Jalandhar, Jhansi, Jodhpur, Kanpur, Kochi, Kolkata, Lucknow, Mumbai, Nagpur, Noida, Patna, Pune, Ranchi, Roorkee, Tirupati, Varanasi, Vijayawada, Visakhapatnam, Warangal

Test Pattern : Objective Type Offline Test

Part-A:		
Engineering Discipline	:	50 Qns
Part-B:		
Engineering Mathematics	:	20 Qns
Reasoning & Aptitude	:	20 Qns
General English	:	10 Qns
Total Marks	:	100
Total Questions	:	100
Time Duration	:	2 hour
Per Question	:	1 mark
Negative Marking	:	0.33 marks

Test Syllabus

Part - A: Engineering Discipline

Civil Engineering : Strength of Materials, Design of Concrete Structures , Soil Mechanics, Environmental Engg, Fluid Mechanics & Highway Engg.

Mechanical Engineering : Basic Thermodynamics, Heat & Mass Transfer, Fluid Mechanics, Industrial Engg, Production Engg and Theory of Machines.

Electrical Engineering : Network Theory, Control System, Electrical Machines, Power Systems, Electrical Measurements, Analog Electronics.

Electronics Engineering : Network Theory, Control System, Electronic Devices & Circuits, Analog & Digital Electronics, Communication Systems.Computer Science Engg: TOC, Algorithms and Programming Methodology, Operating System, DBMS, Computer Networks, Compiler design

Part - B: Engineering Aptitude

Engineering Mathematics, Reasoning & Aptitude, General English as per GATE - 2018 Syllabus

Procedure of Registration

- Log on to www.madeeasy.in
- Fill NST online registration form & pay the registration fee.
- Log in credentials will be mailed to your respective e-mail id.
- Log in & download your Admit Card.
- Venue & timing will be mentioned on Admit Card.
- Candidate should produce Admit Card along with valid Photo ID proof to enter the examination hall.

Important Dates

Registration Opens from	20 Aug 2017
Last date to register online	20 Feb 2018
Download Admit Card	7 Mar to 11 Mar 2018
Test Date	11 Mar 2018
Results	26 Mar 2018

Note 1 : Separate stream-wise merit list will be prepared for each center of MADE EASY.

Note 2 : Ex. MADE EASY Students refers to those students who were previously enrolled in regular & weekend classroom courses like GATE, ESE+GATE+PSUs, Super Talent, GS, Conventional Practice, Post GATE, Rank Improvement batches.

Note 3 : This scholarship is applicable for GATE & GATE+ESE batches only.

Note 4 : Both Ex. MADE EASY & Non-MADE EASY students can appear for NST.

Fee: ₹200/-

For online registration, visit : www.madeeasy.in 011-45124612 nst@madeeasy.in

Shared by QualifyGate

Q.27 The number of roots of polynomial, $s^7 + s^6 + 7s^5 + 14s^4 + 31s^3 + 73s^2 + 25s + 200$, in the open left half of the complex plane is

(a) 3 (b) 4

(c) 5 (d) 6

Ans. (a)

Characteristic equation,

$s^7 + s^6 + 7s^5 + 14s^4 + 31s^3 + 73s^2 + 25s + 200 = 0$

s^7	1	7	31	25
s^6	1	14	73	200
s^5	–7	–42	–175	0
s^4	8	48	200	0
s^3	32	96	0	0
s^2	24	200	0	0
s^1	–170	0	0	0
s^0	200	0	0	0

Auxiliary equation, $A(s) = 8s^4 + 48s^2 + 200$

$$\frac{d}{ds}A(s) = 32s^3 + 96s$$

Total no of poles = 7

Two sign change above auxiliary equation = 2 poles in RHS

Two sign changes below auxiliary equation implies out of 4 symmetric roots about origin two poles are in LHS and two poles are in RHS.

∴ 3 poles in LHS and 4 poles in RHS.

End of Solution

Shared by QualifyGate

Q.28 The equivalent impedance Z_{eq} for the infinite ladder circuit shown in the figure is

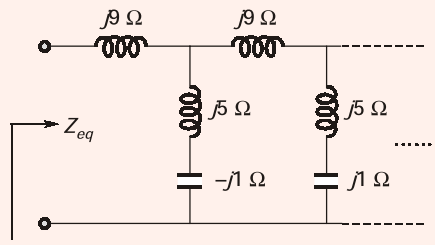

(a) $j12\ \Omega$
(b) $-j12\ \Omega$
(c) $j13\ \Omega$
(d) $13\ \Omega$

Ans. (a)

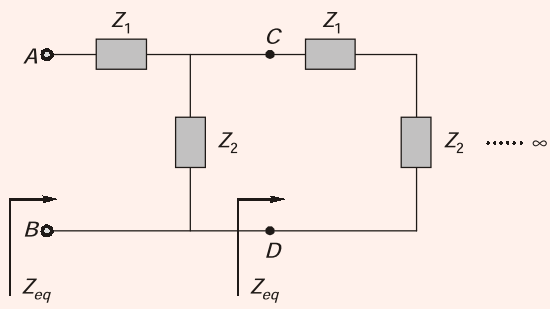

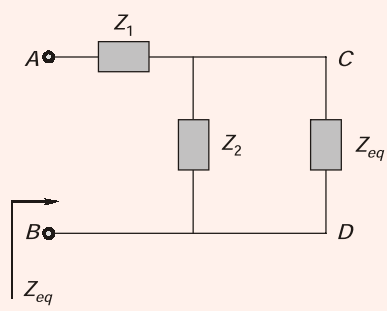

$Z_1 = j9$

$Z_2 = j5 - j1 = j4$

$$Z_{eq} = Z_1 + \frac{Z_2 Z_{eq}}{Z_2 + Z_{eq}}$$

By solving above equation,

$Z_{eq} = j12$

End of Solution

Shared by QualifyGate

Q.29 The capacitance of an air-filled parallel-plate capacitor is 60 pF. When a dielectric slab whose thickness is half the distance between the plates, is placed on one of the plates covering it entirely, the capacitance becomes 86 pF. Neglecting the fringing effects, the relative permittivity of the dielectric is _____ (upto 2 decimal places).

Ans. (2.53)

Given: $C = \dfrac{\varepsilon_0 A}{d} = 60 \text{ pF}$

In second case:

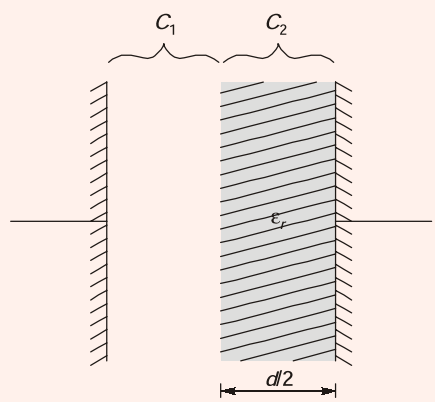

Capacitance, $C_1 = \dfrac{\varepsilon_0 A}{d/2}$

$$= \frac{2\varepsilon_0 A}{d} = 2 \times (60 \text{ pF}) = 120 \text{ pF}$$

and $C_2 = \dfrac{2\varepsilon_0 \varepsilon_r A}{d} = (2 \times 60)\,\varepsilon_r \text{ pF} = 120\,\varepsilon_r \text{ pF}$

Now, $C_{eq} = \dfrac{C_1 C_2}{C_1 + C_2} = \dfrac{120 \times 120\varepsilon_r}{(120 + 120\varepsilon_r)} \text{ pF} = 86 \text{ pF}$ (given)

or, $86 = \dfrac{120 \times 120\varepsilon_r}{120(1+\varepsilon_r)}$

$$\frac{86}{120} = \frac{\varepsilon_r}{1+\varepsilon_r}$$

or, $\varepsilon_r = \dfrac{86}{34} = 2.53$

End of Solution

Shared by QualifyGate

Q.30 The voltage across the circuit in the figure and the current through it, are given by the following expressions:

$v(t) = 5 - 10\cos(\omega t + 60°)$ V

$i(t) = 5 + X\cos(\omega t)$ A

where, $\omega = 100\,\pi$ radian/s. If the average power delivered to the circuit is zero, then the value of X(in ampere) is _____ (upto 2 decimal places).

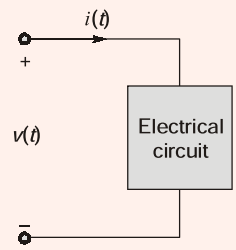

Ans. (10)

Given that,

$$v(t) = 5 - 10\cos(\omega t + 60°)$$

$$i(t) = 5 + X\cos(\omega t - 0°)$$

$$P_{req} = 0$$

$$0 = 5\times 5 + \frac{1}{2}[(-10)(X)\cos(60°)]$$

$$-25 = \frac{1}{2}[(-10)(X)\cos(60°)]$$

$$X = 10$$

End of Solution

Q.31 A dc to dc converter shown in the figure is charging a battery bank, $B2$ whose voltage is constant at 150 V. $B1$ is another battery bank whose voltage is constant at 50 V. The value of the inductor. L is 5 mH and the ideal switch, S is operated with a switching frequency of 5 kHz with a duty ratio of 0.4. Once the circuit has attained steady state and assuming the diode D to be ideal, the power transferred from $B1$ to $B2$ (in Watt) is _____ (upto 2 decimal places).

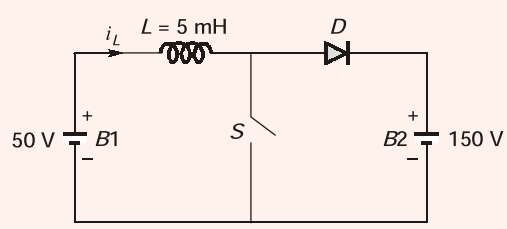

Shared by QualifyGate

Ans. (20)

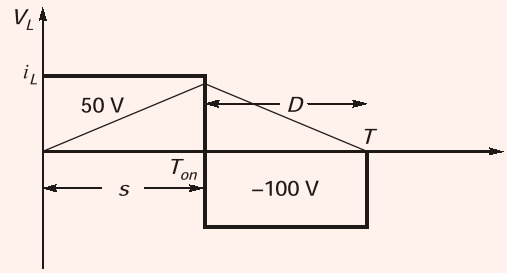

$S \rightarrow$ ON: $V_L = 50$ V

$S \rightarrow$ OFF, $D \rightarrow$ ON:

$$-50 + V_L + 150 = 0$$

$$V_L = -100 \text{ V}$$

$$\Delta I_L = \frac{\alpha V_s}{fL} = \frac{0.4 \times 50}{5 \times 10^3 \times 5 \times 10^{-3}} = 0.8 \text{ A}$$

$$(I_L)_{avg} = I_s = \frac{\Delta I_C}{2} = \frac{0.8}{2} = 0.4 \text{ A}$$

$$P = V_s \cdot I_s = 50 \times 0.4 = 20 \text{ W}$$

End of Solution

Q.32 Let $A = \begin{bmatrix} 1 & 0 & -1 \\ -1 & 2 & 0 \\ 0 & 0 & -2 \end{bmatrix}$ and $B = A^3 - A^2 - 4A + 5I$, where I is the 3×3 identity matrix.

The determinant of B is _____ (upto 1 decimal place).

Ans. (1)

$$A = \begin{bmatrix} 1 & 0 & -1 \\ -1 & 2 & 0 \\ 0 & 0 & -2 \end{bmatrix}$$

$$|A - \lambda I| = 0$$

$$\begin{vmatrix} 1-\lambda & 0 & -1 \\ -1 & 2-\lambda & 0 \\ 0 & 0 & -2-\lambda \end{vmatrix} = 0$$

$(1 - \lambda)((2 - \lambda)(-2 - \lambda)) - 1(0 - 0) = 0$

$\lambda = 1, 2, -2$

Eigen values of A are 1, 2, – 2

Eigen values of A^3 are 1, 8, –8

A^2 are 1, 4, 4

$4A$ are 4, 8, –8

Shared by QualifyGate

$5I$ are 5, 5, 5

$A^3 - A^2 - 4A + 5I$ are 1, 1, 1

$\therefore \quad |B| = (1)(1)(1) = 1$

End of Solution

Q.33 The figure shows two buck converters connected in parallel. The common input dc voltage for the converters has a value of 100 V. The converters have inductors of identical value. The load resistance is 1 Ω. The capacitor voltage has negligible ripple. Both converters operate in the continuous conduction mode. The switching frequency is 1 kHz, and the switch control signals are as shown. The circuit operates in the steady-state. Assuming that the converters share the load equally, the average value of i_{S1}, the current of switch $S1$ (in ampere) is _____ (upto 2 decimal places).

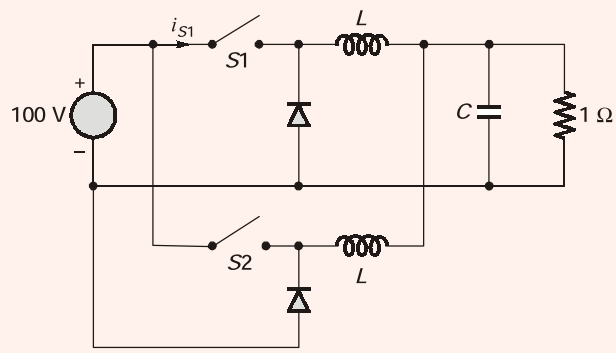

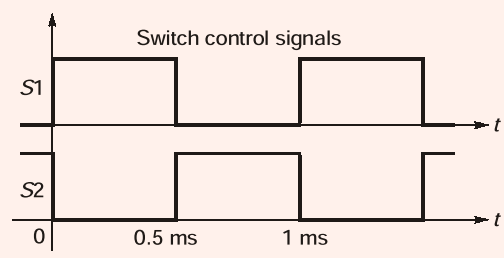

Ans. (50)

S_1 and S_2 are complimentry.

Load is always connected to source.

$\therefore \quad V_0 = V_s = 100 \text{ V}$

$$I_0 = \frac{V_0}{R} = \frac{100}{1} = 100 \text{ A}$$

$$P_{in} = P_0$$

$$V_s \cdot I_s = V_0 I_0$$

$\therefore \quad I_s = I_0 = 100 \text{ A}$

$$I_{s1} = \frac{I_s}{2} = \frac{100}{2} = 50 \text{ A}$$

End of Solution

Shared by QualifyGate

MADE EASY

India's Best Institute for IES, GATE & PSUs

General Studies & Engineering Aptitude Batches for ESE - 2019

MADE EASY announces exclusive batches for General Studies and Engineering Aptitude. These batches are exclusively designed to cover the Paper-I syllabus of Preliminary exam. The classes will be conducted by experienced faculties of MADE EASY focusing on revised exam pattern of Engineering Services Examination. Study material with effective presentation and latest updates will be provided to score well in Paper-I.

Syllabus Covered

1. Current issues of national and international importance relating to social economic and industrial development.
2. Engineering Aptitude covering Logical reasoning and Analytical ability.
3. Engineering Mathematics and Numerical Analysis.
4. General Principles of Design, Drawing, Importance of Safety.
5. Standards and Quality practices in production, construction, maintenance and services.
6. Basic of Energy and Environment : Conservation, Environmental pollution and degradation, Climate Change, Environmental impact assessment.
7. Basic of Project Management.
8. Basics of Material Science and Engineering.
9. Information and Communication Technologies (ICT) based tools and their applications in Engineering such as networking, e-governance and technology based education.
10. Ethics and values in engineering profession.

Batch Details

Course Duration
Regular Batches : 2.5 months
Weekend Batches : 4 months

Timings
Regular : 6 to 7 days a week and 4-6 hours a day
Weekend : Sat, Sun & public holiday, 8 hours each day

Teaching Hours
250-300 hours

Batch Type	Commencing from	Venue	Timing
Regular Batch	20th Feb, 2018	Ghitorni Centre (Delhi)	8:00 AM to 12:00 Noon
Weekend Batch	25th Feb, 2018	Ghitorni Centre (Delhi)	8:00 AM to 5:00 PM

Non-MADE EASY Students	Ex. MADE EASY Students Enrolled in Postal, Rank Improvement, Conventional, GS, Post-GATE, GATE, I+G+P Batches	
₹ 22,500 GS & Engg Aptitude Books will be issued.	₹ 16,500	• GS & Engg Aptitude Books will NOT be issued. • Interested students can avail books by paying the fee of Rs. 2,000/-

Note: Timing & Venue are subjected to periodic changes as per requirements.

ADMISSION OPEN

44-A/1, Kalu Sarai, Sarvapriya Vihar, New Delhi - 110016

Documents Required
- 2 Photographs + Valid photo ID proof
- Ex MADE EASY students should produce their MADE EASY ID card

011-45124612

www.madeeasy.in

Shared by QualifyGate

Q.34 Digital input signals A, B, C with A as the MSB and C as the LSB are used to realize the Boolean function $F = m_0 + m_2 + m_3 + m_5 + m_7$, where m_i denotes the ith minterm. In addition, F has a don't care for m_1. The simplified expression for F is given by

(a) $\bar{A}\bar{C}+\bar{B}C+AC$

(b) $\bar{A}+C$

(c) $\bar{C}+A$

(d) $\bar{A}C+BC+A\bar{C}$

Ans. (b)

Given, $f = m_0 + m_2 + m_3 + m_5 + m_7$

and m_1 = don't care

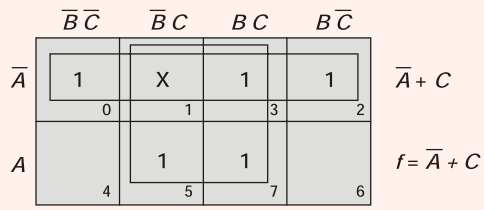

End of Solution

Q.35 Which one of the following statements is true about the digital circuit shown in the figure?

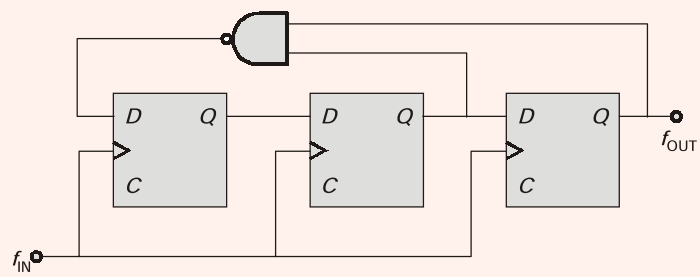

(a) It can be used for dividing the input frequency by 3.

(b) It can be used for dividing input frequency by 5.

(c) It can be used for dividing the input frequency by 7.

(d) It cannot be reliably used as a frequency divider due to disjoint internal cycles.

Ans. (b)

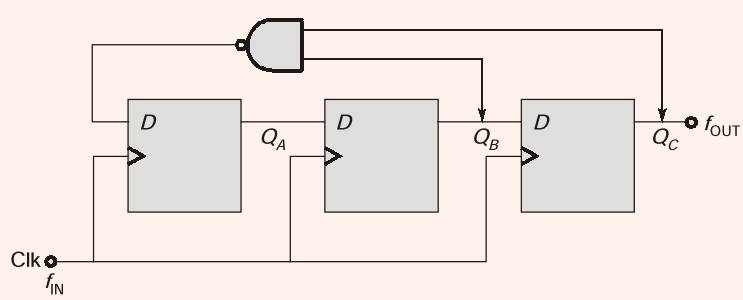

Shared by QualifyGate

$Q_B \cdot Q_C$	Q_A	Q_B			
D_A	D_B	D_C	Q_A	Q_B	Q_C
			0	0	0
1	0	0	1	0	0
1	1	0	1	1	0
1	1	1	1	1	1
0	1	1	0	1	1
0	0	1	0	0	1
1	0	0	1	0	0
1	1	0	1	1	0

Cycle

Repeated

mod 5 counter

So, frequency will be divided by 5.

End of Solution

Q.36 The equivalent circuit of a single-phase induction motor is shown in the figure, where the parameters are $R_1 = R_2' = X_{l_1} = X_{l_2}' = 12\,\Omega$, $X_M = 240\,\Omega$ and s is the slip. At no-load the motor speed can be approximated to be the synchronous speed. The no-load lagging power factor of the motor is _____ (upto 3 decimal places).

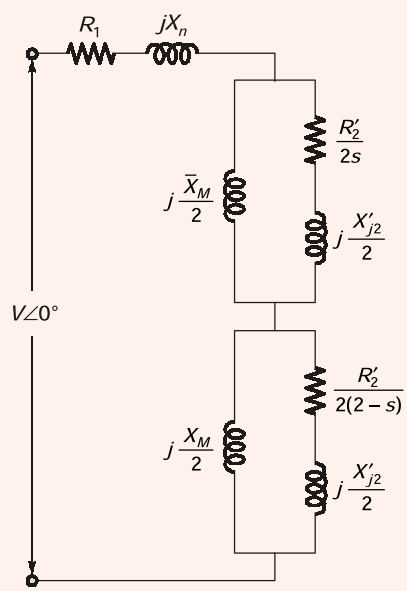

Shared by QualifyGate

Ans. (0.106)

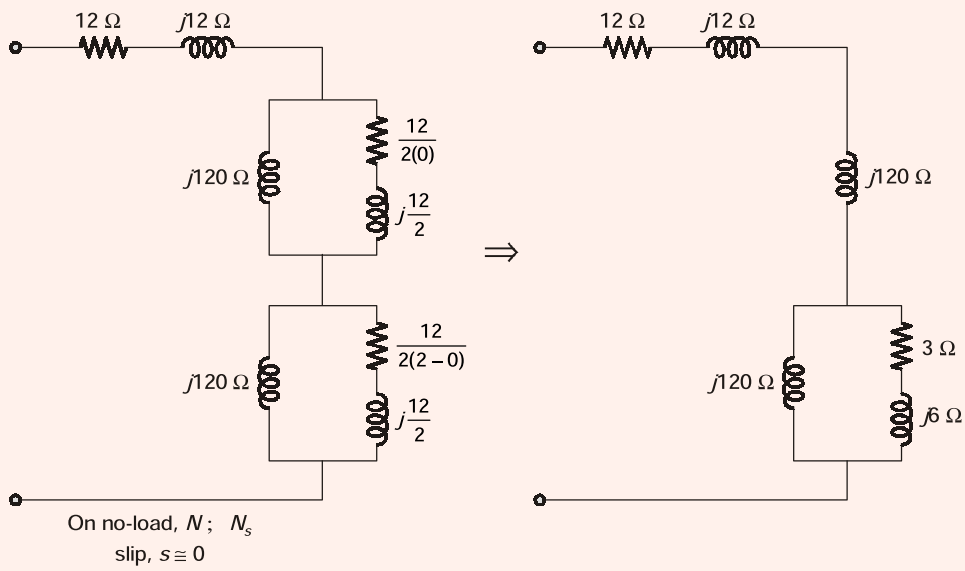

Simplifying the above circuit into a simple R-L circuit,

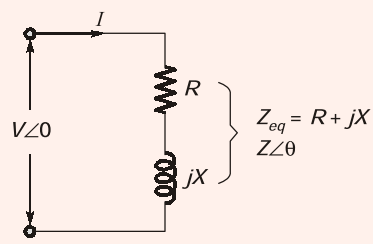

$$Z_{eq} = \frac{(3+j6)(j120)}{(3+j126)} + [12+j132]$$

$$= 138.563\angle 83.9\ \Omega$$

Current drawn by motor is

$$I = \frac{V\angle 0}{Z\angle\theta} \qquad \{\therefore\ \theta : \text{impedance angle will be p.f. angle}\}$$

$\therefore$ No-load lagging p.f. of motor is ($\cos\theta$)

$\cos(83.9) = 0.106$ lagging power factor

End of Solution

Shared by QualifyGate

Q.37 In the circuit shown in the figure, the bipolar junction transistor (BJT) has a current gain $\beta = 100$. The base-emitter voltage drop is a constant, $V_{BE} = 0.7$ V. The value of the Thevenin equivalent resistance R_{Th} (in Ω) as shown in the figure is _____ (upto 2 decimal places).

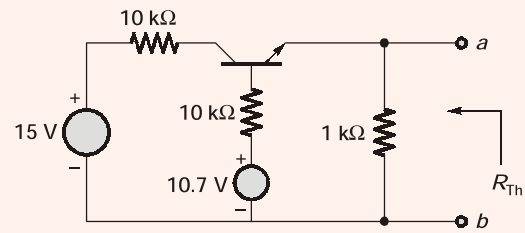

Ans. (92)

DC model:

KVL @ input loop,

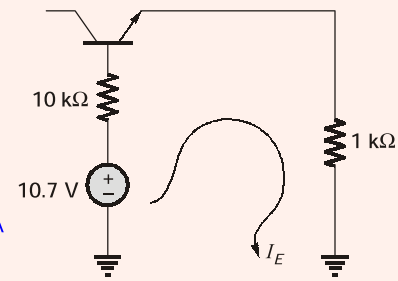

$$I_E = \frac{10.7 - 0.7}{\frac{10\,k\Omega}{1+\beta} + 1\,k\Omega} = \frac{10}{\frac{10\,k\Omega}{101} + 1\,k\Omega}$$

$$= \frac{10}{1\,k\Omega + 0.099\,k} = \frac{10}{1.09\,k} = 9.17\text{ mA}$$

$$r_e = \frac{V_T}{I_e} = \frac{25\text{ mV}}{9.17\text{ mA}} = 2.72\ \Omega$$

$$\beta_{re} = r_\pi = 0.272\ k\Omega$$

The ac model for the common base circuit is

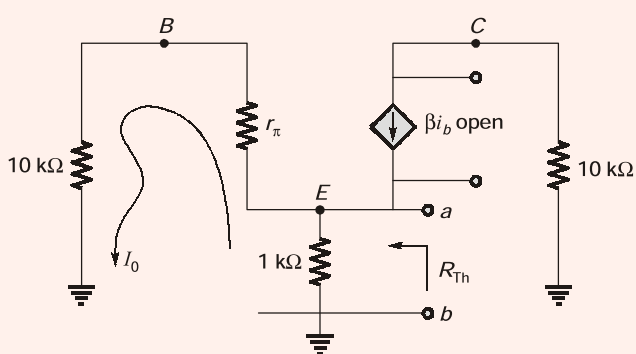

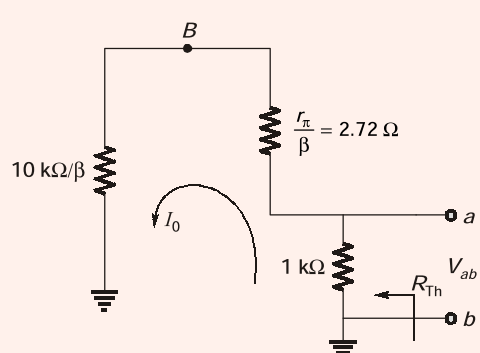

Shared by QualifyGate

$$R_{Th} = \frac{V_{ab}}{I_0} = 1\ k\Omega \,||\, 2.72\ \Omega + 100\ \Omega$$
$$= 1\ k\Omega \,||\, 102.72\ \Omega$$
$$= 1\ k\Omega \,||\, 0.102\ k\Omega$$
$$= \frac{1\times 0.102}{1+0.102} = \frac{0.102}{1.102} = 0.092\ k\Omega = 92\ \Omega$$

End of Solution

Q.38 Consider a system governed by the following equations:

$$\frac{dx_1(t)}{dt} = x_2(t) - x_1(t)$$

$$\frac{dx_2(t)}{dt} = x_1(t) - x_2(t)$$

The initial conditions are such that $x_1(0) < x_2(0) < \infty$. Let $x_{1f} = \lim_{t\to\infty} x_1(t)$ and $x_{2f} = \lim_{t\to\infty} x_2(t)$.

Which one of the following is true?

(a) $x_{1f} < x_{2f} < \infty$
(b) $x_{2f} < x_{1f} < \infty$
(c) $x_{1f} = x_{2f} < \infty$
(d) $x_{1f} = x_{2f} = \infty$

Ans. (d)

$$(D+1)\,x_1 = x_2$$
$$\Rightarrow \quad (D+1)\,x_1 - x_2 = 0$$
$$(D+1)\,x_2 = x_1$$
$$\Rightarrow \quad -x_1 + (D+1)\,x_2 = 0$$
$$x_{1f} = \underset{t\to\infty}{Lt}\ x_1(t)$$
$$x_{2f} = \underset{t\to\infty}{Lt}\ x_2(t)$$
$$(D+1)x_1 - x_2 = 0$$
$$-(D+1)x_1 + (D+1)^2\,x_2 = 0$$
$$((D+1)^2 - 1)\,x_2 = 0$$
$$(D^2 + 2D)\,x_2 = 0$$
$$D^2 + 2D = 0$$
$$D(D+2) = 0 \qquad \therefore\ x^2 = C_1 + C_2e^{-2t} \qquad ...(1)$$
$$D = 0,\ -2$$
$$x_{2f} = \underset{t\to\infty}{Lt}\ C_1 + C_2e^{-2t} = C_1$$
$$(D+1)x_1 - (D+1)\,x_2 = 0$$
$$-x_1 + (D+1)\,x_2 = 0$$
$$((D+1)^2 - 1)\,x_1 = 0$$
$$(D_2 + 2D)\,x_1 = 0$$
$$\therefore \quad x_{1f} = \underset{t\to\infty}{Lt}\ C_1 + C_2e^{-2t} = C_1$$
$$\therefore \quad x_1 = C_1 + C_2e^{-et}$$

End of Solution

Shared by QualifyGate

Q.39 Consider the two bus power system network with given loads as shown in the figure. All the values shown in the figure are in per unit. The reactive power supplied by generator G_1 and G_2 are Q_{G1} and Q_{G2} respectively. The per unit values of Q_{G1}, Q_{G2}, and line reactive power loss (Q_{loss}) respectively are

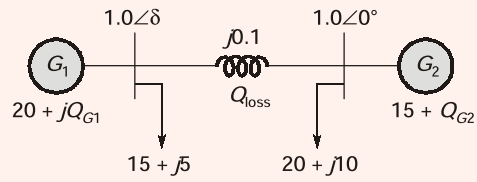

(a) 5.00, 12.68, 2.68
(b) 6.34, 10.00, 1.34
(c) 6.34, 11.34, 2.68
(d) 5.00, 11.34, 1.34

Ans. (c)

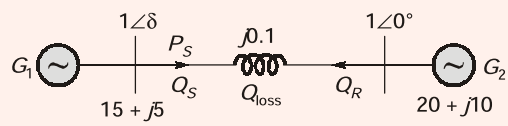

At G_2 load demand is 20 pu, G_2 supplies only 15. Remaining supplied by G_1 through transmission line.

$$P_s = \left|\frac{V_S V_R}{X_L}\right| \sin\delta$$

$$5 = \frac{1\times 1}{0.1}\sin\delta$$

$$\delta = 30°$$

$$Q_S = \frac{V_S^2}{X_L} - \frac{V_S V_R}{X_L}\cos\delta$$

$$= \frac{1^2}{0.1} - \frac{1\times 1}{0.1}\cos 30° = 1.34 \text{ p.u.}$$

$$Q_R = \left|\frac{V_S V_R}{X_L}\right|\cos\delta - \left|\frac{V_R^2}{X_L}\right|$$

$$= \left|\frac{1\times 1}{0.1}\right|\cos 30° - \frac{1^2}{0.1} = -1.34 \text{ p.u.}$$

$$Q_{loss} = Q_S - Q_R$$
$$= 1.34 - (-1.34) = 2.68 \text{ p.u.}$$

At G_1: $Q_{G1} = Q_{load} + Q_S$
$= 5 + 1.34 = 6.34$ p.u.

At G_2: $Q_{G2} = Q_{load} + (-Q_R)$
$= 10 - (-1.34) = 11.34$ p.u.

End of Solution

Shared by QualifyGate

NEXT IAS

BIG LEARNINGS MADE EASY

AN INITIATIVE OF MADE EASY GROUP • UNDER THE GUIDANCE OF Mr. B. SINGH (CMD, MADE EASY GROUP)

- Quality Teaching
- Well Planned Curriculum
- Professionally Managed

General Studies

Prelims Specific Batch for CSE 2018

Regular Batch

Commencing from

15th Feb, 2018

Venue : Saket Centre
Timing : 8:00 AM - 12:00 PM

General Studies

Pre cum Main Batches for CSE 2019

Regular Batches :

21st May / 18th June, 2018

Weekend Batches :

23rd June, 2018

Venue : Saket Centre and Old Rajinder Nagar Centre

Features :

- Classes to be taken by renowned faculty group.
- Targeted, focused and current based approach.
- Inclusive of Test Series and detailed study material.
- Provision of regular interaction with faculty, through NEXT IAS online learning platform.
- Well framed modules with systematic subject sequence.
- Timely completion of syllabus giving ample time for revision.
- Daily news & editorial updates (with analysis) of important newspapers.
- Weekly test for self appraisal for both Pre and Main exam.
- Facility of course fee payment in installments.

3 Days Free Demo Classes

Admission Open

Old Rajinder Nagar Centre : Ground Floor, 6, Old Rajinder Nagar (Near Salwan School Gate No. 2) New Delhi - 110060
Ph : 011-49858612, 8800338066

Saket Centre (Classes) : 316/274, Westend Marg (Near ITDC), Saidulajab, Near Saket Metro Station, New Delhi-110030; Ph : 011-45124642, 8800776445
Admission & Enquiry : 44-A/1, Kalu Sarai, Near Hauz Khas Metro Station, New Delhi-110016; Ph : 011-45124642, 8800776445

info@nextias.com www.nextias.com

Shared by QualifyGate

Q.40 A three-phase load is connected to a three-phase balanced supply as shown in the figure. If V_{an} = 100∠0° V. V_{bn} = 100∠–120° V and V_{cn} = 100∠–240° V (angles are considered positive in the anti-clockwise direction), the value of R for zero current in the neutral wire is _____ Ω (upto 2 decimal places).

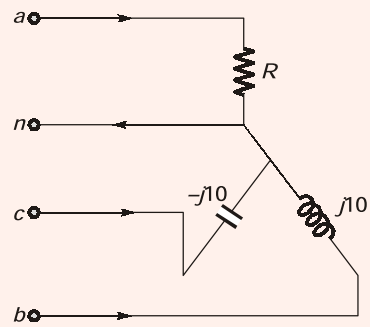

Ans. (5.77)

From the given voltages,

$$I_R = \frac{V_{RN}}{R} = \frac{100\angle 0°}{R}$$

$$I_Y = \frac{V_{YN}}{jX_L} = \frac{100\angle -120°}{j10} = 10\angle -210°$$

$$I_B = \frac{V_{BN}}{-jX_C} = \frac{100\angle -240°}{-j10} = 10\angle -150°$$

For $I_N = 0$

$$I_R + I_Y + I_B = 0$$

$$\frac{100}{R} + 10\angle -210° + 10\angle -150° = 0$$

$$R = 5.77\ \Omega$$

End of Solution

Q.41 A 200 V DC series motor, when operating from rated voltage while driving a certain load, draws 10 A current and runs at 1000 rpm. The total series resistance is 1 Ω. The magnetic circuit is assumed to be linear. At the same supply voltage, the load torque is increased by 44%. The speed of the motor in rpm (rounded to the nearest integer) is _____.

Ans. (825)

From circuit diagram,

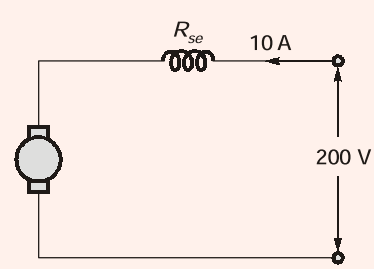

$$E_{b1} = V - I_a(R_a + R_{se})$$
$$E_{b1} = 200 - 10(1) = 190\ \text{V}$$
$$N_1 = 1000\ \text{rpm}$$

Load torque increased by 44% $(T \propto I_a^2)$

$$\therefore \quad \frac{T_2}{T_1} = \left(\frac{I_{a2}}{I_{a1}}\right)^2$$

Shared by QualifyGate

$$\Rightarrow \qquad \frac{1.44T_1}{T_1} = \left(\frac{I_{a2}}{10}\right)^2$$

$$\therefore \qquad I_{a2}^2 = 144 \Rightarrow I_{a2} = 12 \text{ A}$$

At same voltage, $\quad E_{b2} = V - I_{a2}(R_a + R_{se})$

$$\therefore \qquad E_{b2} = 200 - 12(1) = 188 \text{ V}$$

For series motor, $\quad N \propto \dfrac{E_b}{\phi} \; (\phi \propto I_a)$

$$\frac{N_2}{N_1} = \frac{E_{b2}}{E_{b1}} \times \frac{I_{a1}}{I_{a2}}$$

$$\therefore \qquad \frac{N_2}{1000} = \frac{188}{190} \times \frac{10}{12}$$

$$N_2 = 824.56 \text{ rpm} \simeq 825 \text{ rpm}$$

End of Solution

Q.42 The unit step response $y(t)$ of a unity feedback system with open-loop transfer function $G(s)H(s) = \dfrac{K}{(s+1)^2\,(s+2)}$ is shown in the figure. The value of K is _____ (upto 2 decimal places).

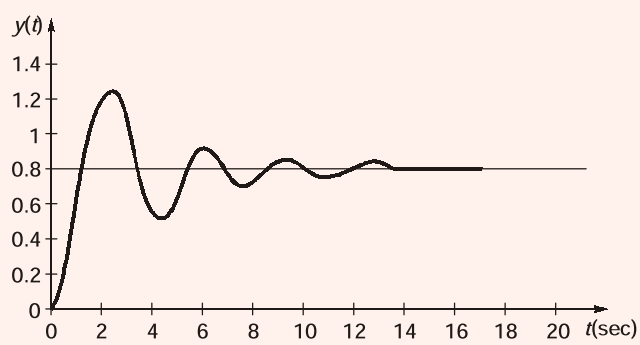

Ans. (8)

Closed loop transfer function,

$$\frac{C(s)}{R(s)} = \frac{\dfrac{K}{(s+1)^2(s+2)}}{1+\dfrac{K}{(s+1)^2(s+2)}}$$

$$\frac{C(s)}{R(s)} = \frac{K}{(s+1)^2(s+2)+K}$$

Given, $\quad R(s) = \dfrac{1}{s}$

Shared by QualifyGate

$$C(s) = \frac{K}{s\left[(s+1)^2(s+2)+K\right]}$$

$$\lim_{s\to 0} sC(s) = 0.8 \qquad \text{(given)}$$

$$\frac{K}{2+K} = 0.8$$

$$\Rightarrow \qquad K = 8$$

End of Solution

Q.43 The positive, negative and zero sequence impedances of a three-phase generator are Z_1, Z_2 and Z_0 respectively. For a line-to-line fault with fault impedance Z_f, the fault current is $I_{f1} = kI_f$, where I_f is the fault current with zero fault impedance. The relation between Z_f and k is

(a) $Z_f = \dfrac{(Z_1+Z_2)(1-k)}{k}$

(b) $Z_f = \dfrac{(Z_1+Z_2)(1+k)}{k}$

(c) $Z_f = \dfrac{(Z_1+Z_2)k}{1-k}$

(d) $Z_f = \dfrac{(Z_1+Z_2)k}{1+k}$

Ans. (a)

For LL fault:

Without Z_f,

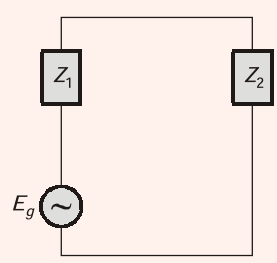

$$I_f = \frac{\sqrt{3}E_g}{Z_1+Z_2}$$

With Z_f,

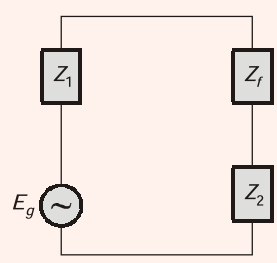

$$I_{f1} = \frac{\sqrt{3}E_g}{Z_1+Z_2+Z_f}$$

Shared by QualifyGate

Given, $I_{f1} = k \cdot I_f$

$$\frac{\sqrt{3} \cdot E_g}{Z_1 + Z_2 + Z_f} = \left(\frac{\sqrt{3}\, E_g}{Z_1 + Z_2}\right) k$$

$$Z_1 + Z_2 = k\,(Z_1 + Z_2 + Z_f)$$

$$Z_f = \frac{(Z_1 + Z_2)\,(1-k)}{k}$$

End of Solution

Q.44 If C is a circle $|z| = 4$ and $f(z) = \dfrac{z^2}{(z^2 - 3z + 2)^2}$, then $\oint_C f(z)\, dz$ is

(a) 1
(b) 0
(c) –1
(d) –2

Ans. (b)

$$\int \frac{z^2}{(z^2 - 3z + 2)}\, dz$$

$$\int \frac{z^2}{(z-1)^2 (z-2)^2}\, dz$$

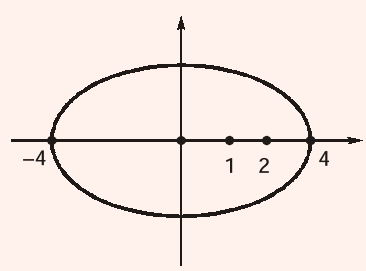

$$\underset{z=1}{\text{Res.}}\, f(z) = \underset{z \to 1}{Lt} \frac{1}{1!} \frac{d}{dz}\left((z-1)^2 \cdot \frac{z^2}{(z-1)^2 (z-2)^2}\right)$$

$$= \underset{z \to 1}{Lt}\left(\frac{2z(z-2)^2 - 2z^2(z-2)}{(z-2)^4}\right)$$

$$= \underset{z \to 1}{Lt}\left(\frac{2z(z-2) - 2z^2}{(z-2)^3}\right)$$

$$= \frac{-4}{-1} = 4$$

Shared by QualifyGate

$$\underset{z=2}{\text{Res.}} f(z) = \underset{z\to 2}{Lt} \frac{1}{1!}\frac{d}{dz}\left((z-2)^2 . \frac{z^2}{(z-1)^2(z-2)^2}\right)$$

$$= \underset{z\to 2}{Lt}\left(\frac{(z-1)^2 .2z - z^2 2(z-1)}{(z-1)^4}\right)$$

$$= \underset{z\to 2}{Lt}\left(\frac{2z(z-1)-2z^2}{(z-1)^3}\right)$$

$$= \frac{4-8}{1} = -4$$

By residue theorem, $I = 2\pi i\ (4 - 4) = 0$

End of Solution

Q.45 The per unit power output of a salient pole generator which is connected to an infinite bus, is given by the expression, $P = 1.4 \sin\delta + 0.15 \sin 2\delta$, where δ is the load angle. Newton-Raphson method is used to calculate the value of δ for $P = 0.8$ pu. If the initial guess is 30°, then its value (in degree) at the end of the first iteration is

(a) 15° (b) 28.48°
(c) 28.74° (d) 31.20°

Ans. (c)

$$P(\delta) = 1.4 \sin\delta + 0.15 \sin 2\delta = 0.8$$
$$= 1.4 \sin\delta + 0.15 \sin 2\delta - 0.8 = 0$$

$$P'(\delta) = \frac{d}{d\delta}(P(\delta))$$
$$= 1.4 \cos\delta + 0.30 \cos 2\delta$$

Given, $\delta_0 = 30°$

By using Newton Raphson method for single variable,

$$\Delta\delta = \delta_1 - \delta_0 = -\frac{f(\delta_0)}{f'(\delta_0)} = -\frac{P(\delta_0)}{P'(\delta_0)}$$

$$\delta_1 - 30° = -\frac{1.4\sin 30° + 0.15\sin 60° - 0.8}{1.4\cos 30° + 0.3\cos 60°}$$

$$\delta_1 - 30° = -0.0219 \text{ rad} = -1.26°$$

$$\delta_1 = 28.74°$$

End of Solution

Shared by QualifyGate

Q.46 A phase controlled single-phase rectifier, supplied by an AC source, feeds power to an R-L-E load as shown in the figure. The rectifier output voltage has an average value given by $V_0 = \frac{V_m}{2\pi}(3+\cos\alpha)$, where V_m = 80π volts and α is the firing angle. If the power delivered to the lossless batter is 1600 W. α in degree is _____ (upto 2 decimal places).

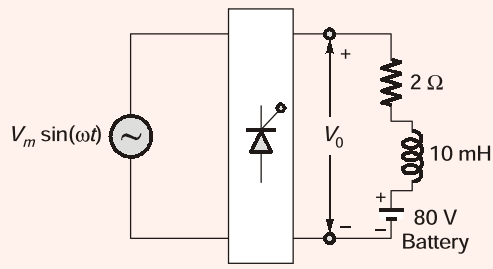

Ans. (90)

$$V_0 = \frac{V_m}{2\pi}(3+\cos\alpha)$$

$$E_b I_0 = 1600 \text{ W}$$

$$I_0 = \frac{1600}{80} = 20 \text{ A}$$

$$V_0 = E_b + I_0 R_a$$

$$\frac{V_m}{2\pi}(3+\cos\alpha) = 80 + (20 \times 2)$$

$$\frac{80\pi}{2\pi}(3+\cos\alpha) = 80 + 40$$

$$\alpha = 90°$$

End of Solution

Q.47 As shown in the figure, C is the arc from the point (3, 0) to the point (0, 3) on the circle $x^2 + y^2 = 9$. The value of the integral $\int_C (y^2+2yx)\,dx + (2xy+x^2)\,dy$ is _____ (upto 2 decimal places).

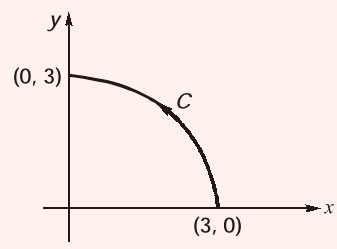

Shared by QualifyGate

Ans. (0)

$$x^2 + y^2 = 9$$
$$x = 3\cos\theta$$
$$y = 3\sin\theta$$
$$dx = -3\sin\theta\, d\theta$$
$$dy = 3\cos\theta\, d\theta$$

θ varies from 0 to $\pi/2$

$$\int\left(y^2 + 2xy\right)dx + \left(2xy + x^2\right)dy$$

$$= \int_0^{\pi/2}\left(9\sin^2\theta + 18\sin\theta\cos\theta\right)\left(-3\sin\theta\, d\theta\right) + \left(18\sin\theta\cos\theta + 9\cos^2\theta\right)\left(3\cos\theta\right)d\theta$$

$$= \int_0^{\pi/2}\left(-27\sin^3\theta - 54\sin^2\theta\cos\theta + 54\sin\theta\cos^2\theta + 27\cos^3\theta\right)d\theta$$

$$= 0$$

End of Solution

Q.48 Let $f(x) = 3x^3 - 7x^2 + 5x + 6$. The maximum value of $f(x)$ over the interval [0, 2] is _____ (upto 1 decimal place).

Ans. (12)

$$f(x) = 3x^3 - 7x^2 + 5x + 6 \qquad \text{in}[0, 2]$$
$$f'(x) = 9x^2 - 14x + 5$$
$$f''(x) = 18x - 14$$
$$f'(x) = 0$$
$$x^2 - 14x + 5 = 0$$
$$x = 1, 0.55$$
$$x = 1$$
$$f''(1) = 18 - 14 = 4 > 0 \text{ minima}$$
$$x = 0.55$$
$$f''(0.55) = -4.1 < 0 \text{ maxima}$$

Maximum $\{f(0), f(0.55), f(2)\}$

Maximum $\{6, 7.13, 12\} = 12$

End of Solution

Q.49 The Fourier transform of a continuous time signal $x(t)$ is given by $X(\omega) = \dfrac{1}{(10 + j\omega)^2} \cdot -\infty < \omega < \infty$, where $j = \sqrt{-1}$ and ω denotes frequency. Then the value of $|\ln x(t)|$ at $t = 1$ is _____ (upto 1 decimal place). (ln denotes the logarithm to base e).

Shared by QualifyGate

Ans. (10)

$$x(t) \rightleftharpoons X(j\omega) = \frac{1}{(10+j\omega)^2}$$

By taking inverse Fourier transform,

$$x(t) = te^{-10t}\,u(t)$$

Now, $x(t)_{t=1} = 1 \times e^{-10} \times 1 = e^{-10}$

Thus, $|\ln\{x(t)\}| = |\ln(e^{-10})|$

$$= |-10| = 10$$

End of Solution

Q.50 A 0-1 ampere moving iron ammeter has an internal resistance of 50 mΩ and inductance of 0.1 mH. A shunt coil is connected to extend its range to 0-10 Ampere for all operating frequencies. The time constant in milliseconds and resistance in mΩ of the shunt coil respectively are

(a) 2, 5.55
(b) 2, 1
(c) 2.18, 0.55
(d) 11.1, 2

Ans. (a)

Given, $I_m = 1$ A, $R_m = 50$ mΩ
$L_m = 0.1$ mH, $I = 10$ A

We know, $R_{sh} = \dfrac{R_m}{(m-1)}$; $m = \dfrac{I}{I_m}$

Here, $\dfrac{10}{1} = 10$

$\therefore$ $R_{sh} = \dfrac{50\times10^{-3}}{10-1} = \dfrac{50\times10^{-3}}{9} = 5.55\,\text{m}\Omega$

For all frequencies time constants of the shunt and meter arm should be equal.

i.e., $\dfrac{\omega L_m}{R_m} = \dfrac{\omega L_{sh}}{R_{sh}}$

or, $\dfrac{L_m}{R_m} = \dfrac{L_{sh}}{R_{sh}}$

or, $\dfrac{L_m}{R_m} = \dfrac{0.1\times10^{-3}}{50\times10^{-3}} = 0.002$

$\therefore$ Option (a) is correct.

End of Solution

Shared by QualifyGate

Q.51 The voltage $v(t)$ across the terminals a and b shown in the figure, is a sinusoidal voltage having a frequency ω = 100 radian/s. When the inductor current $i(t)$ is in phase with the voltage $v(t)$, the magnitude of the impedance Z (in Ω) seen between the terminals a and b is _____ (upto 2 decimal places).

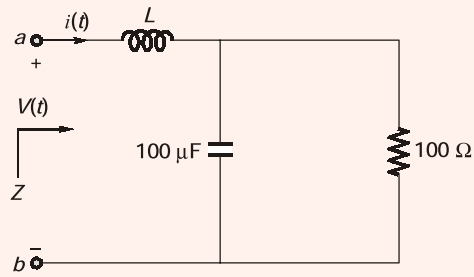

Ans. (50)

At resonance imaginary part of Z_{eq} = 0

$$\text{Real of } Z_{eq} = \frac{R_1 X_c^2}{R_1^2 + X_c^2} = \frac{100 \times 100 \times 100}{100^2 + 100^2} = 50\ \Omega$$

End of Solution

Q.52 A DC voltage source is connected to a series L-C circuit by turning on the switch S at time $t = 0$ as shown in the figure. Assume $i(0) = 0$, $v(0) = 0$. Which one of the following circular loci represents the plot of $i(t)$ versus $v(t)$?

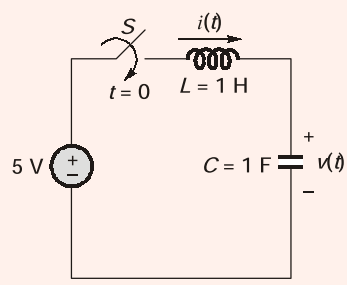

(a)
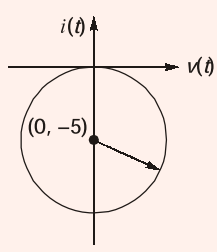

(b)
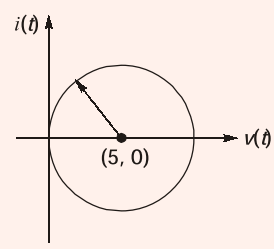

(c)
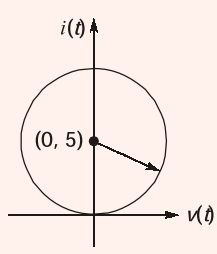

(d)
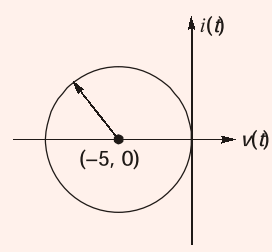

Shared by QualifyGate

Ans. (b)

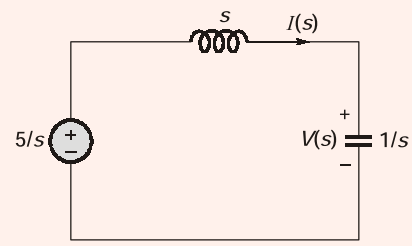

$$I(s) = \frac{\frac{5}{s}}{s+\frac{1}{s}} = \frac{5}{s^2+1}$$

$$i(t) = 5\ \sin t$$

$$v(t) = \frac{1}{C}\int_0^t i\,dt = \int_0^t 5\sin t\,dt$$

$$v(t) = 5[-\cos t]_0^t = 5[-\cos t + 1]$$

$$v(t) = 5 - 5\ \cos t$$

t	$i(t)$	$v(t)$
0	0	0
$\frac{T}{4}$	5	5
$\frac{T}{2}$	0	10
$\frac{3T}{4}$	–5	5
T	0	0

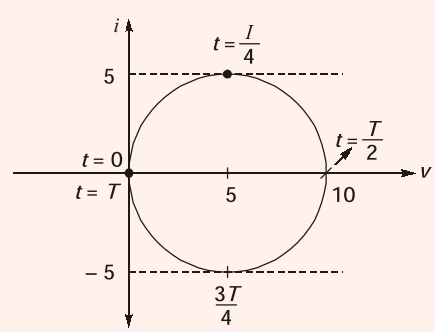

End of Solution

Q.53 Consider the two continuous-time signals defined below:

These signals are sampled with a sampling period of $T = 0.25$ seconds to obtain discrete-time signals $x_1[n]$ and $x_2[n]$, respectively. Which one of the following statements is true?

(a) The energy of $x_1[n]$ is greater than the energy of $x_2[n]$.

(b) The energy of $x_2[n]$ is greater than the energy of $x_1[n]$.

(c) $x_1[n]$ and $x_2[n]$ have equal energies.

(d) Neither $x_1[n]$ nor $x_2[n]$ is a finite energy signal.

Shared by QualifyGate

Ans. (a)

$$x_1(t) = \begin{cases} |t|, -1 \le t \le 1 \\ 0, \text{ otherwise} \end{cases}$$

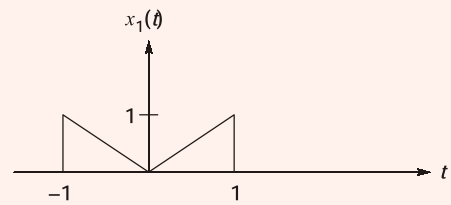

T_s = sampling time-period
= 0.25 sec

$x_1(n) = \{1, 0.75, 0.5, 0.25, 0, 0.25, 0.5, 0.75, 1\}$

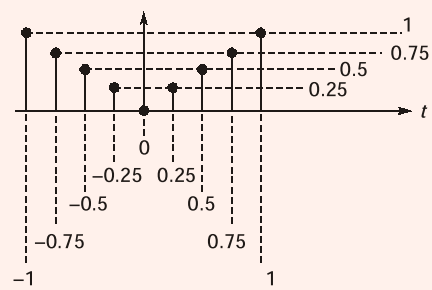

Now,

$$x_2(t) = \begin{cases} 1-|t|, -1 \le t \le 1 \\ 0, \text{ otherwise} \end{cases}$$

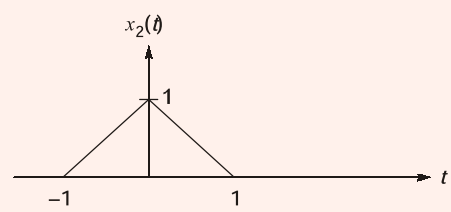

$x_2(n) = \{0, 0.25, 0.5, 0.75, 1, 0.75, 0.5, 0.25, 0\}$

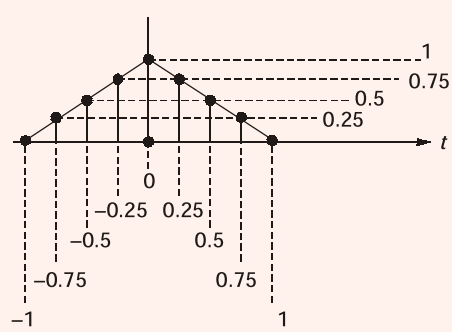

Since $x_1(n)$ is having one more non-zero sample of amplitude '1' as compared to $x_2(n)$. Therefore, energy of $x_1(n)$ is greater than energy of $x_2(n)$.

End of Solution

Shared by QualifyGate

Q.54 The signal energy of the continuous-time signal
$x(t) = [(t-1)\,u(t-1)] - [(t-2)\,u(t-2)] - [(t-3)\,u(t-3)] + (t-4)\,u(t-4)]$ is

(a) $\frac{11}{3}$ (b) $\frac{7}{3}$

(c) $\frac{1}{3}$ (d) $\frac{5}{3}$

Ans. (d)

$$x(t) = r(t-1) - r(t-2) - r(t-3) + r(t-4)$$

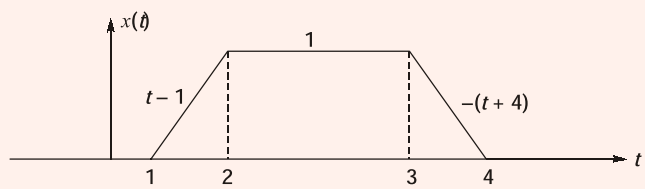

$$E\,x(t) = \int_{-\infty}^{\infty} \left|x(t)^2\right| dt$$

$$= \int_1^2 \left|(t-1)^2\right| dt + \int_2^3 1^2 dt + \int_3^4 -\{(t+4)\}^2\, dt$$

$$= \frac{1}{3} + 1 + \frac{1}{3} = \frac{2}{3} + 1 = \frac{5}{3}$$

End of Solution

Q.55 A three-phase, 900 kVA, $3\,\text{kV}/\sqrt{3}\,\text{kV}$ (Δ/Y), 50 Hz transformer has primary (high voltage side) resistance per phase of 0.3 Ω and secondary (low voltage side) resistance per phase of 0.02 Ω. Iron loss of the transformer is 10 kW. The full load % efficiency of the transformer operated at unity power factor is _____ (upto 2 decimal places).

Ans. (97.36)

900 kVA, Δ/Y, 3-phase transformer,

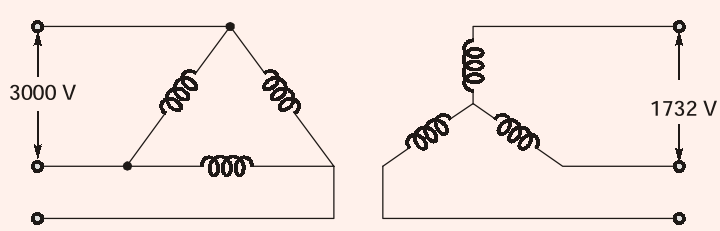

Given, $R_1 = 0.3\ \Omega/\text{ph}$

$R_2 = 0.02\ \Omega/\text{ph}$

Iron loss = 10 kW

Shared by QualifyGate

Primary line current, $I_{l_1} = \dfrac{900 \times 1000}{\sqrt{3} \times 3000} = 173.2 \text{ A}$

Primary phase current, $I_{ph_1} = 100 \text{ A}$

Secondary line current, $I_{l_2} = \dfrac{900 \times 1000}{\sqrt{3} \times 1732} = 300 \text{ A}$

Secondary phase current,

$$I_{ph_2} = 300 \text{ A}$$

Cu loss of H.V. side $= 3 \times I_1^2 R_1 = 3(100)^2 (0.3)$

$= 9000$ Watts

Cu loss of L.V. side $= 3 \times I_2^2 R_2 = 3(300)^2 (0.02)$

$= 5400$ Watts

Full load efficiency @ u.p.f.

$$\eta = \frac{1 \times 900 \times 1000 \times 1}{1 \times 900 \times 1000 + 9000 + 5400 + 10000}$$

$$= \frac{900000}{924400}$$

$\therefore \quad \eta = 0.9736$ (or) 97.36%

End of Solution

■■■■