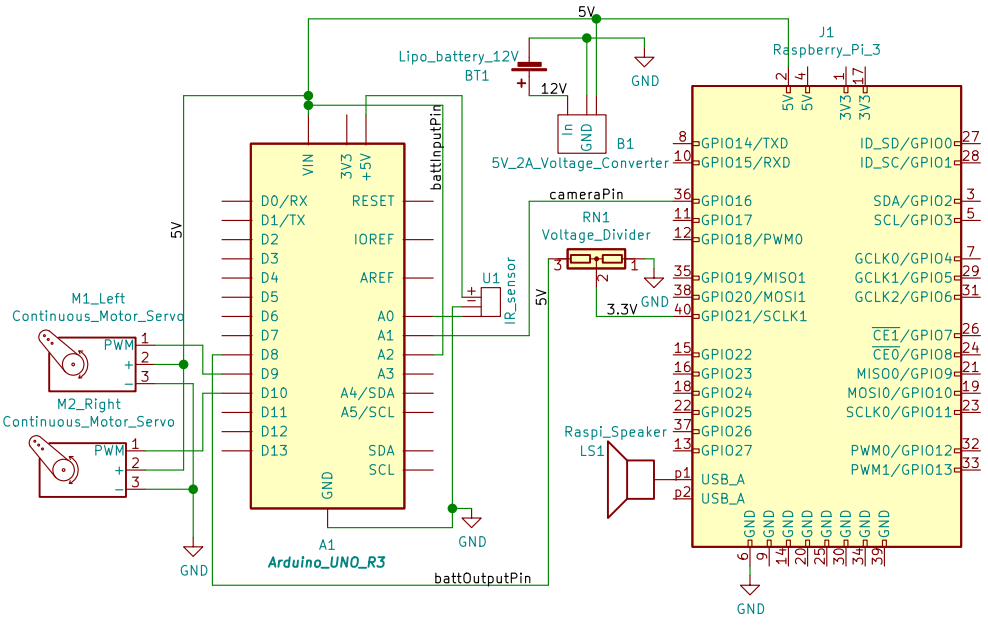

Case Zito

Sheet: /

File: The-Wanderer.sch

Title: The Wanderer Circuit

Size: User	Date: 2019-12-09	**Rev:**
KiCad E.D.A. kicad (5.1.5)-3		Id: 1/1