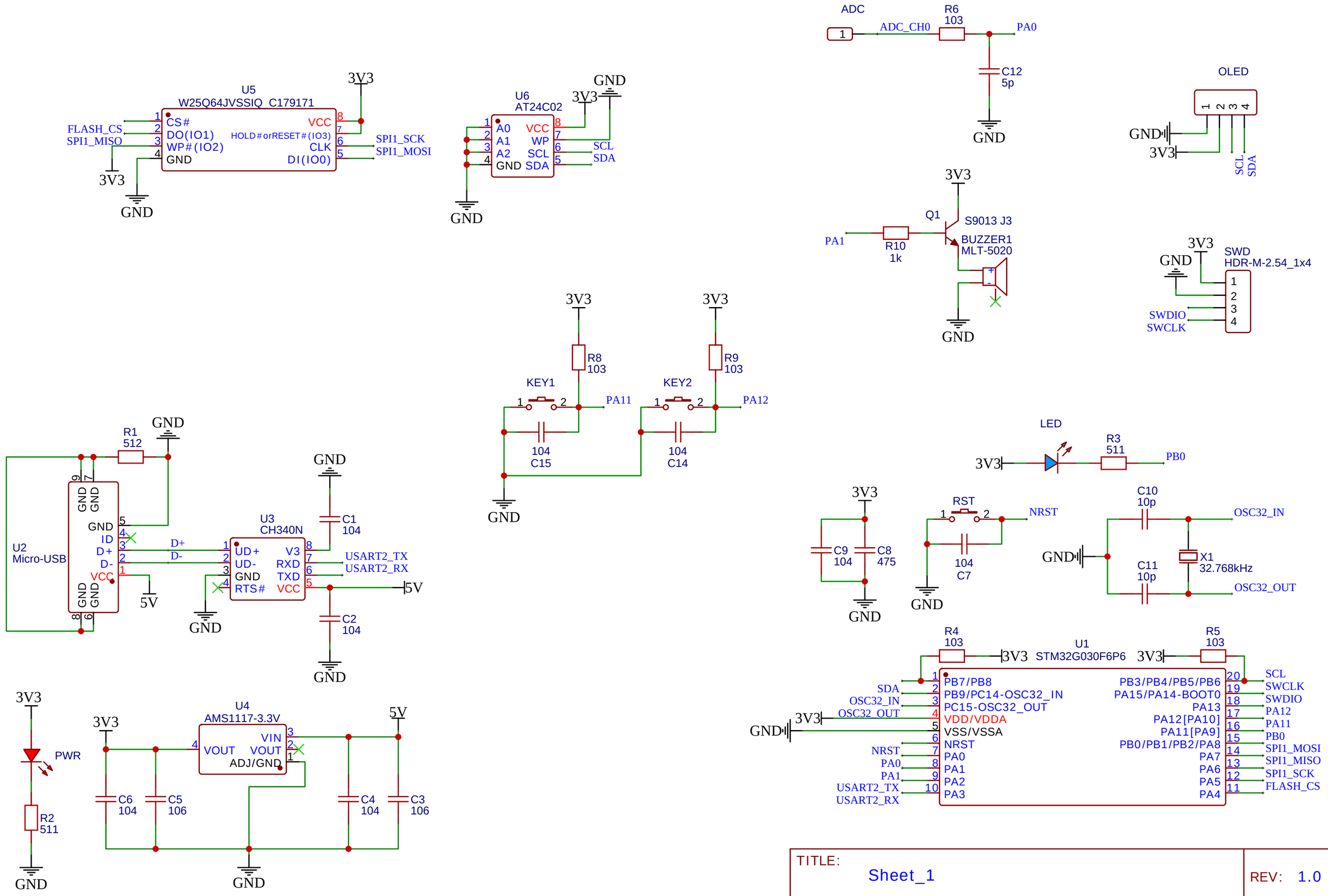

TITLE: Sheet_1	REV: 1.0
嘉立创EDA Company: 嵌入式系统及物联网应用实验室	Sheet: 1/1
Date: 2023-06-22 Drawn By: 聂志鹏	