UNIVERSITÀ di VERONA
Dipartimento di INFORMATICA

# Discrete Optimization and Decision Making

## Introduction to Integer Linear Programming

*Master's degrees in Data Science - Artificial Intelligence - Mathematics*
*Academic Year 2024/2025*

Romeo Rizzi (Dept. of Computer Science, Univ. of Verona)
Roberto Zanotti (Dept. of Clinical and Experimental Sciences, Univ. of Brescia)

# Optimization problem

Find a solution $\mathbf{x}$ such that

$$
\begin{aligned}
& min \quad f(\mathbf{x}) \\
\text{s. to} \quad & g_i(\mathbf{x}) \geq 0 \qquad i = 1, ..., m \\
& h_j(\mathbf{x}) = 0 \qquad j = 1, ..., p \\
& \mathbf{x} \geq 0
\end{aligned}
$$

where $f$, $g_i$ and $h_j$ are generic functions in $\mathbf{x} \in \mathbb{R}^n_+$.

# Mixed Integer Linear Programming Problem (MILP)

Discrete Optimization Problem $\rightarrow$ **(Mixed) Integer Linear Programming**

$$
\begin{aligned}
min \quad & \mathbf{c}^T\mathbf{x} + \mathbf{d}^T\mathbf{y} \\
& A\mathbf{x} + B\mathbf{y} \geq \mathbf{b} \\
& \mathbf{x}, \mathbf{y} \geq 0 \\
& \mathbf{x} \text{ integer}
\end{aligned}
$$

If all variables have to be integer $\rightarrow$ **Integer Linear Programming** (ILP).

If all variables have to be binary $\rightarrow$ **Binary Integer Programming** (BIP).

# The continuous relaxation

By removing the integrality constraints on the variables, the corresponding LP problem is obtained (**Continuous Relaxation**):

$$z_{LP} := min \quad \mathbf{c}^T\mathbf{x} + \mathbf{d}^T\mathbf{y}$$

$$A\mathbf{x} + B\mathbf{y} \geq \mathbf{b}$$

$$\mathbf{x}, \mathbf{y} \geq 0$$

where:

- $z_{LP}$ is the optimal value of the continuous relaxation
- $P = \{\mathbf{x}, y \geq \mathbf{0} : A\mathbf{x} + B\mathbf{y} \geq \mathbf{b}\}$ is the feasible region associated with the continuous relaxation

# Guidelines for strong formulations

**Linear Programming** $\Rightarrow$ a good formulation has small number $n, m$ of variables and constraints $\Rightarrow$ complexity is polynomial in $n$ and $m$

**Integer Linear Programming** $\Rightarrow$ choice of the formulation is crucial

We should learn how to reply to the following questions:

- How could we compare different ILP formulations of the same problem?
- Which formulation is the strongest one?
- What does it mean that a formulation is stronger than another one?

# Comparison between two different formulations

**0-1 Plant Location Problem (Formulation A)**

$$min \quad \sum_{j=1}^{n} k_j y_j + \sum_{i=1}^{m} \sum_{j=1}^{n} c_{ij} x_{ij}$$

$$\sum_{j=1}^{n} x_{ij} = 1 \qquad i = 1, ..., m$$

$$\sum_{i=1}^{m} x_{ij} \leq m \cdot y_j \qquad j = 1, ..., n \quad (*)$$

$$x_{ij}, y_j \in \{0, 1\} \quad i = 1, ..., m; j = 1, ..., n$$

$x_{ij} = 1$ if plant $j$ serves customer $i$, 0 otherwise.

$y_j = 1$ if plant $j$ is opened, 0 otherwise.

**0-1 Plant Location Problem (Formulation B)**

Same formulation as A, but instead of constraints (*) we use:

$$x_{ij} \leq y_j \quad i = 1, ..., m; j = 1, ..., n$$

We can observe that:

1. The two formulations are equivalent: they provide the same integer optimal solution.
2. The feasible regions of their continuous relaxations (convex polyhedrons) are different.
3. We use the linear programming relaxations to compare the two formulations.

Let us consider continuous variables for formulations A and B:

$$x_{ij}, y_j \in \{0,1\} \rightarrow 0 \leq x_{ij} \leq 1, 0 \leq y_j \leq 1 \quad \forall i,j$$

The following two convex polyhedrons define the continuous relaxations of formulations A and B:

$$\begin{aligned} P_{PLA} = \{(x,y) : \textstyle\sum_{j=1}^{n} x_{ij} = 1, \forall i; \quad \sum_{i=1}^{m} x_{ij} \leq m y_j \ \ \forall j, \\ 0 \leq x_{ij} \leq 1 \quad \forall i,j; \quad 0 \leq y_j \leq 1 \qquad \forall j\} \end{aligned}$$

$$\begin{aligned} P_{PLB} = \{(x,y) : \textstyle\sum_{j=1}^{n} x_{ij} = 1, \forall i; \quad x_{ij} \leq y_j \ \ \forall i,j, \\ 0 \leq x_{ij} \leq 1 \quad \forall i,j; \quad 0 \leq y_j \leq 1 \qquad \forall j\} \end{aligned}$$

The polyhedrons $P_{PLA}$ and $P_{PLB}$ contain the same set of integer solutions, but $P_{PLB} \subset P_{PLA}$.

| $c_{ij}$ | Plant 1 | Plant 2 |
|---|---|---|
| Client 1 | 2 | 3 |
| Client 2 | 4 | 1 |

| | $k_j$ |
|---|---|
| Plant 1 | 5 |
| Plant 2 | 2 |

Formulation A is:

$$
\begin{aligned}
\min \quad & 5y_1 + 2y_2 + 2x_{11} + 3x_{12} \\
& + 4x_{21} + x_{22} \\
\text{t.c.} \quad & x_{11} + x_{12} = 1 \\
& x_{21} + x_{22} = 1 \\
& x_{11} + x_{21} \leq 2y_1 \\
& x_{12} + x_{22} \leq 2y_2 \\
& x_{ij}, y_j \in \{0, 1\}
\end{aligned}
$$

Formulation B is:

$$
\begin{aligned}
\min \quad & 5y_1 + 2y_2 + 2x_{11} + 3x_{12} \\
& + 4x_{21} + x_{22} \\
\text{t.c.} \quad & x_{11} + x_{12} = 1 \\
& x_{21} + x_{22} = 1 \\
& x_{11} \leq y_1 \\
& x_{21} \leq y_1 \\
& x_{12} \leq y_2 \\
& x_{22} \leq y_2 \\
& x_{ij}, y_j \in \{0, 1\}
\end{aligned}
$$

The following solution is feasible for $P_{PL_A}$

$$z = 6.5$$
$$x_{11} = 1, x_{12} = 0, x_{21} = 0, x_{22} = 1$$
$$y_1 = 0.5, y_2 = 0.5$$

but not for $P_{PL_B}$!

Let $Z^*$ be the optimal solution value of the integer programming problem, and let $Z_{PLA}$ and $Z_{PLB}$ be the optimal solution values of the continuous relaxations:

$$\begin{aligned} \text{since} \quad & P_{PLB} \subset P_{PLA} \quad \rightarrow \quad Z_{PLA} \leq Z_{PLB}, \\ \text{moreover} \quad & Z_{PLB} \leq Z^* \quad \rightarrow \quad Z_{PLA} \leq Z_{PLB} \leq Z^*. \end{aligned}$$

Many methods for solving ILP problems depend on the availability of good lower (upper) bounds:

The sharper the bound (closer to $Z^*$)

$$\downarrow$$

the better the ILP methods behave.

# Which is the ideal formulation of an ILP problem?

Let $X = \{\mathbf{x}^1, \mathbf{x}^2, \ldots, \mathbf{x}^k\}$ be the set of feasible integer solutions to an ILP problem. We assume that the feasible set is bounded and, therefore, $X$ is finite.

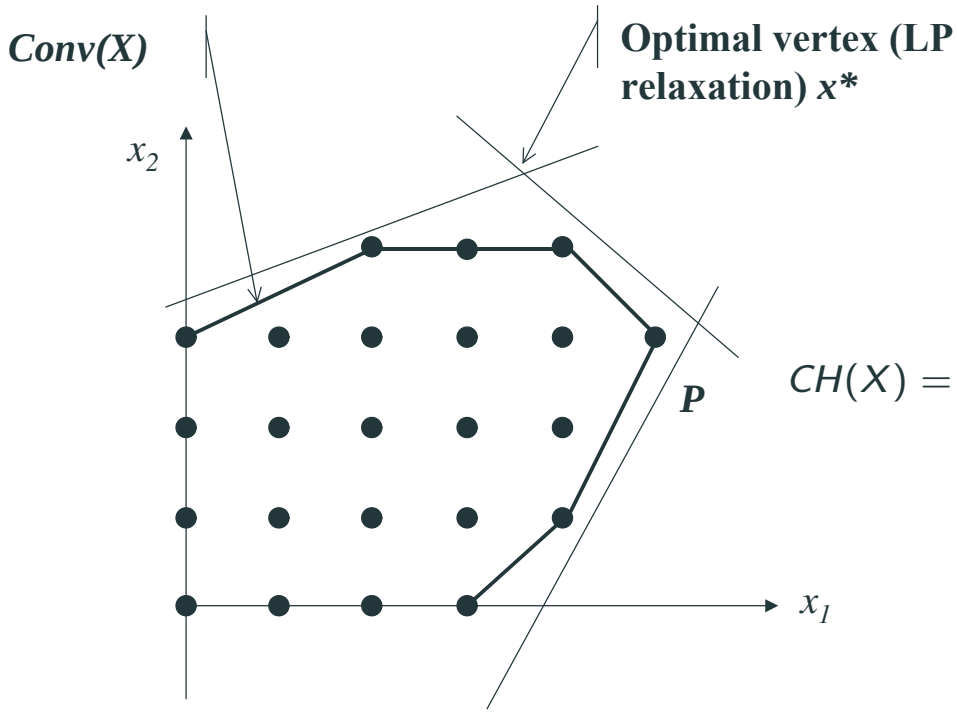


**Convex Hull** of $X$:

$$CH(X) = \left\{ \sum_{i=1}^{k} \lambda_i \, \mathbf{x}^i \mid \sum_{i=1}^{k} \lambda_i = 1, \quad \lambda_i \geq 0, \mathbf{x}^i \in X \right\}$$

# Convex Hull

- The set $CH(X)$ is a polyhedron with all integer extreme points.
- The feasible set $P$ of any linear programming relaxation satisfies $CH(X) \subset P$.
- If we knew $CH(X)$ explicitly, i.e. $CH(X) = \{\mathbf{x} \mid D\mathbf{x} \leq \mathbf{d}\}$, the ILP problem:

$$\begin{aligned} min \quad & \mathbf{c}^T\mathbf{x} \\ & \mathbf{x} \in X \end{aligned}$$

  could be solved by finding the optimal extreme point of the linear programming problem:

$$\begin{aligned} min \quad & \mathbf{c}^T\mathbf{x} \\ & \mathbf{x} \in CH(X) \end{aligned}$$

To look for $CH(X)$ is generally a hard task.

**Compromise:** find a polyhedron that strictly approximates $CH(X)$.

# Quality of a formulation

**QUALITY**

The **quality of a formulation** of an ILP problem, with feasible solution set $X$, can be judged by the closeness of the feasible set of its linear programming formulation to the convex hull of $X$.

In particular, let A and B be two different formulations for the same integer programming problem.

Let us denote $P_A$ and $P_B$ as the feasible sets of the corresponding linear programming relaxations.

Formulation A is said to be **at least as strong as** formulation B if:

$$P_A \subset P_B.$$

# Modeling with exponentially many constraints

Now we demonstrate through examples that strong formulations, and in particular the Convex Hull, may involve an exponential number of constraints.

**Minimum Spanning Tree Problem**

- Let $G = (N, E)$ be an undirected graph, with node set $N$ ($|N| = n$) and edge set $E$ ($|E| = m$).
- A cost $c_e$ is associated with each edge $e \in E$.

The minimum spanning tree problem looks for a spanning tree of minimum cost.

*Application*: design of transportation, communication, and computer networks.

# The spanning tree

**Definition**

A spanning tree of graph $G = (N, E)$:

- should have $n - 1$ edges;
- should alternatively satisfy one of the following conditions:
  a) it must not contain a cycle (Formulation A);
  b) it has to be a connected graph (Formulation B).

## Minimum Spanning Tree Problem (Formulation A)

$$\min \sum_{e \in E} c_e x_e$$

$$\sum_{e \in E} x_e = n - 1$$

$$\sum_{e \in E(S)} x_e \leq |S| - 1 \qquad S \subset N, S \neq \emptyset$$

$$x_e \in \{0, 1\} \qquad e \in E.$$

where for any $S \subset N$, we define $E(S) = \{(i, j) \in E \mid i, j \in S\}$.

- This formulation is known as *subtour elimination formulation*.
- We indicate with $P_A$ its linear programming relaxation (we replace binary conditions with $0 \leq x_e \leq 1$).

## Minimum Spanning Tree Problem (Formulation B)

$$\min \sum_{e \in E} c_e x_e$$

$$\sum_{e \in E} x_e = n - 1$$

$$\sum_{e \in \delta(S)} x_e \geq 1 \qquad S \subset N, S \neq \emptyset$$

$$x_e \in \{0, 1\} \qquad e \in E.$$

where for any $S \subset N$, we define $\delta(S) = \{(i, j) \in E \mid i \in S, j \notin S\}$.

- This formulation is known as *cutset formulation*.
- We indicate with $P_B$ its linear programming relaxation (we replace binary conditions with $0 \leq x_e \leq 1$).

**Figure 1:** Example: $S = \{1, 2, 4, 7\} \rightarrow E(S) = \{(1, 2), (1, 4), (1, 7), (2, 4), (4, 7)\}$ and $\delta(S) = \{(2, 3), (4, 5), (7, 8)\}$.

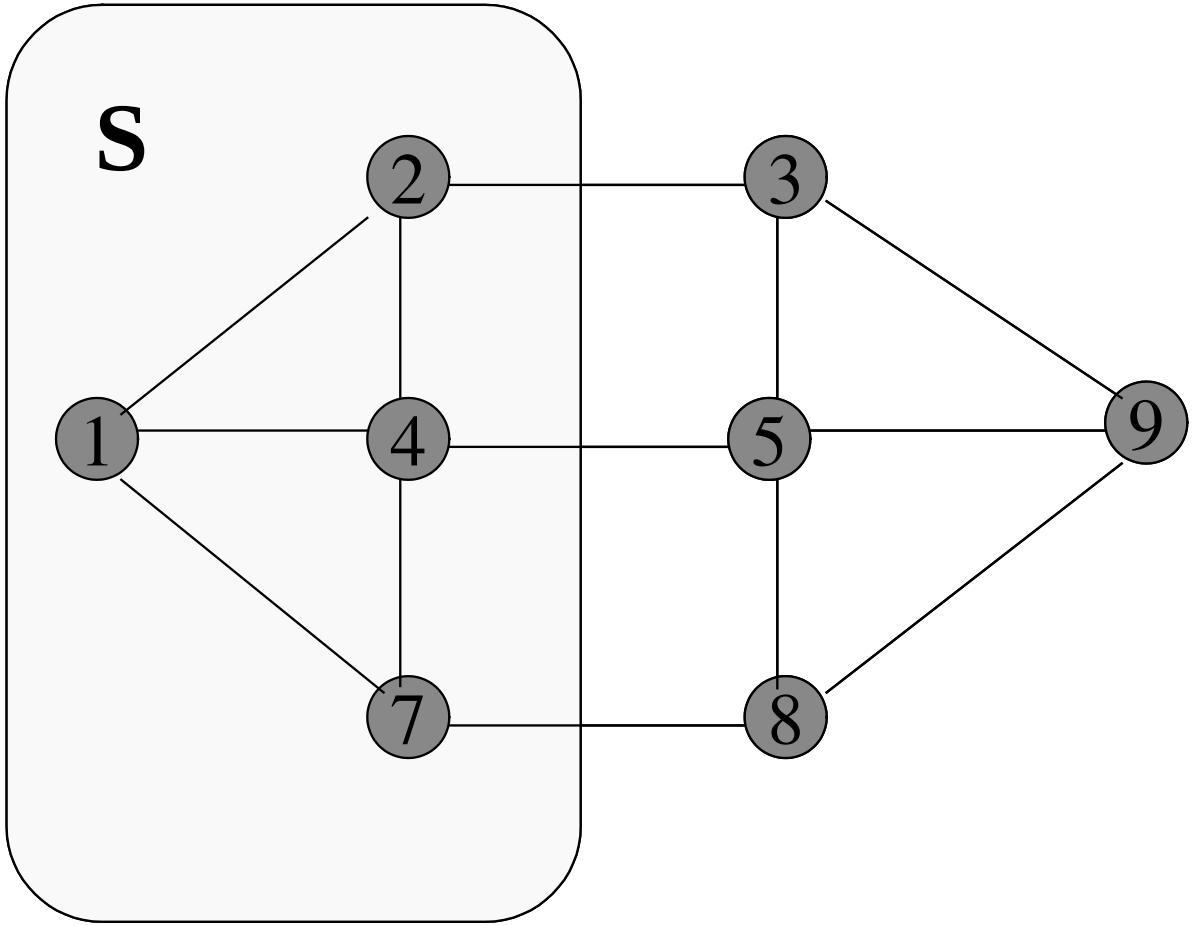

# Which formulation is stronger?

**Proposition**

*The following properties hold:*

1. $P_A \subset P_B$, *and there exist examples for which the inclusion may be strict.*
2. *The polyhedron* $P_B$ *can have fractional extreme points.*

The proof is interesting because it shows how we can compare alternative formulations of discrete optimization problems.

# Proof of the Proposition 1/4

**Proof of point 1:**

For any set $S$ of nodes, we have:

$$E = E(S) \cup \delta(S) \cup E(N \setminus S).$$

Therefore,

$$\sum_{e \in E(S)} x_e + \sum_{e \in E(N \setminus S)} x_e + \sum_{e \in \delta(S)} x_e = \sum_{e \in E} x_e.$$

# Proof of the Proposition 2/4

For $\mathbf{x} \in P_A$ and for $S \subset N, S \neq \emptyset$ we have:

$$\sum_{e \in E(S)} x_e \leq |S| - 1 \text{ and } \sum_{e \in E(N \setminus S)} x_e \leq |N \setminus S| - 1.$$

Since

$$\sum_{e \in E} x_e = n - 1,$$

we obtain that

$$\sum_{e \in \delta(S)} x_e \geq 1,$$

and therefore $\mathbf{x} \in P_B$.

# Proof of the Proposition 3/4

The following example shows how the inclusion may be strict.

**Figure 2:** The Minimum Spanning Tree {(2,5), (4,5), (1,2), (3,4)} has cost 2.

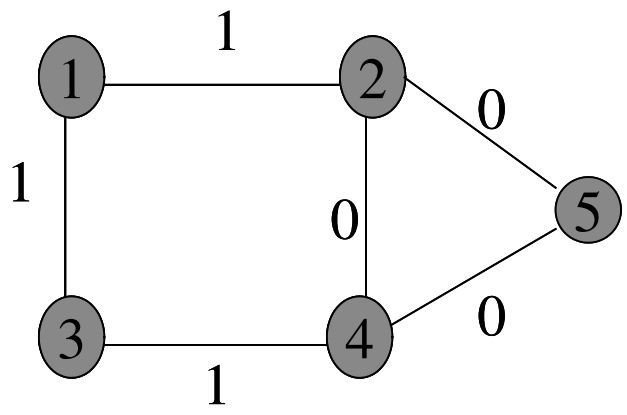


**Figure 3:** Optimal solution on the instance in Fig. 2 for the relaxation $P_B$.

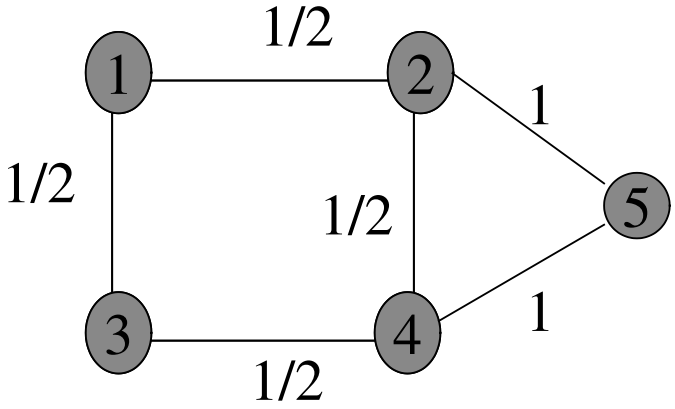

# Proof of the Proposition 4/4

**Proof of Point 2:**
To show that the polyhedron $P_B$ may have fractional extreme points, we build an objective function under which there is a unique optimal solution that is fractional. This establishes that this unique solution is an extreme point.

Consider the example in Figure 2. The unique optimal solution to $P_B$ is the fractional solution shown in Figure 3 with a cost of 3/2. This shows that $P_B$ has a fractional extreme point.

**Remark**

*It can be shown that $P_A = CH(X)$, i.e. the polyhedron $P_A$ is a representation of the convex hull of the set of vectors corresponding to spanning trees.*

# The Perfect Matching Problem

**Given:**

- an even number $n$ of persons to be matched into pairs to perform a job;
- a cost $c_e$ of the edge $e = (i, j)$ for pairing person $i$ with person $j$;
- an undirected graph $G = (N, E)$ with $|N| = n$ and where if edge $(i, j) \notin E$ persons $i$ and $j$ cannot be matched.

**The Problem**

Find a matching that minimizes the total cost.

**Definition**

**Matching:** a pairing of persons, so that each individual is matched with exactly another one.

# Perfect Matching: Mathematical Formulations

## Formulation A

$$\min \sum_{e \in E} c_e x_e$$

$$\sum_{e \in \delta(\{i\})} x_e = 1, \quad i \in N$$

$$x_e \in \{0, 1\} \quad e \in E.$$

## Formulation B

Formulation A

$$+$$

$$\sum_{e \in \delta(S)} x_e \geq 1, \quad S \subset N, |S| \text{ odd}$$

# Properties

**Remark**

*It can be shown that $P_B = CH(M)$, where $M$ is the set of all vectors $\mathbf{x}$ corresponding to matchings.*

We use example in Figure 4 to show that $P_A \neq CH(M)$

**Figure 4:** Instance of a Perfect Matching (costs on edges).

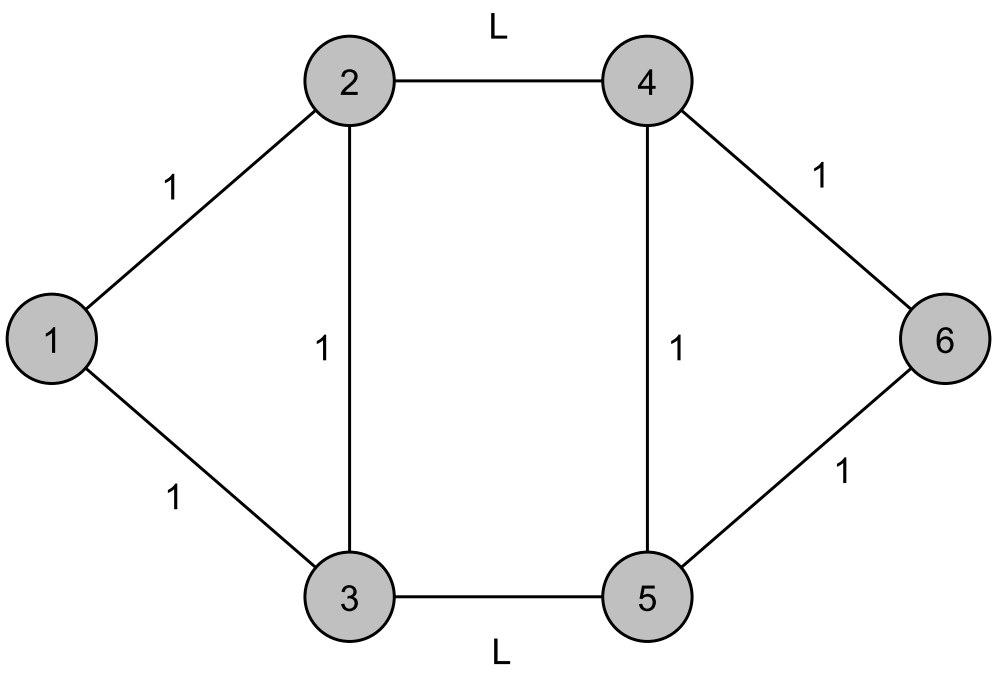

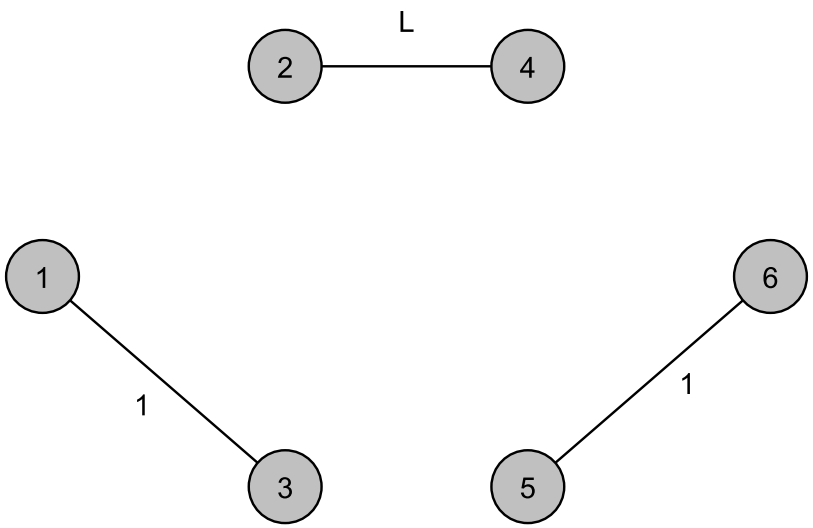


**Figure 5:** Optimal matching has cost $L + 2$.

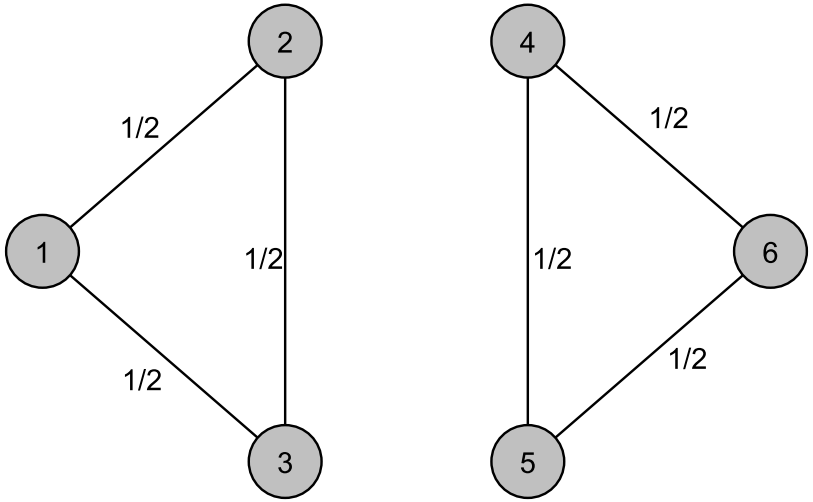


**Figure 6:** Optimal solution over polyhedron $P_A$ has cost 3.