DRG. No. 28763-63A-VBD-UTL-0085 REV. 0

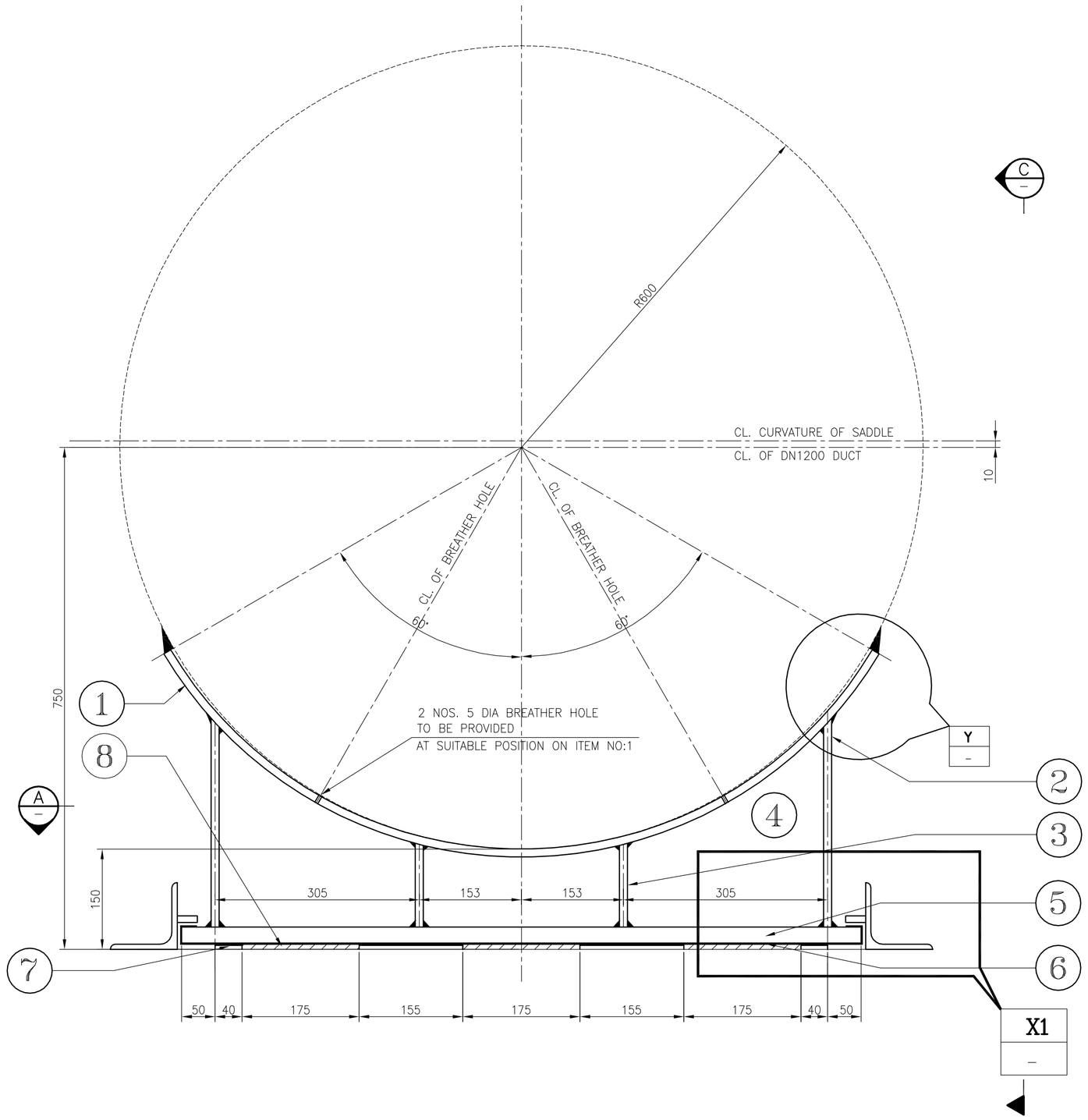

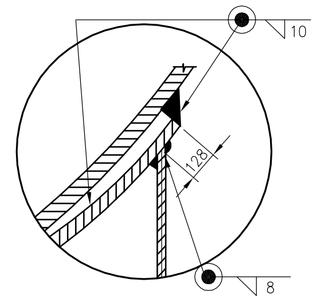

DETAIL Y 1:1

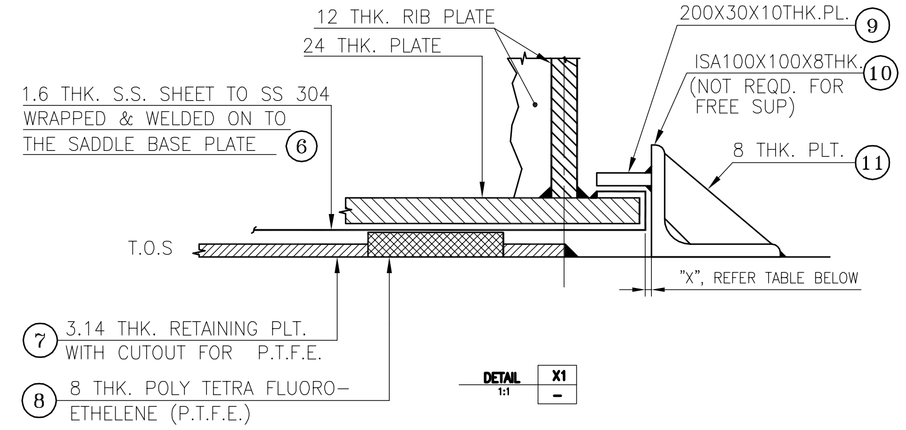

DETAIL X1 1:1

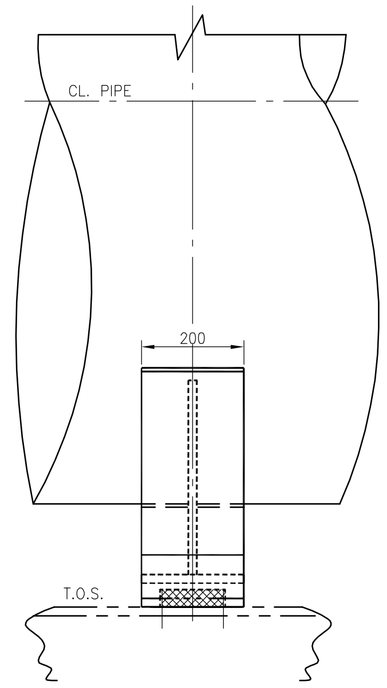

SECTION C
SCALE = 1:1

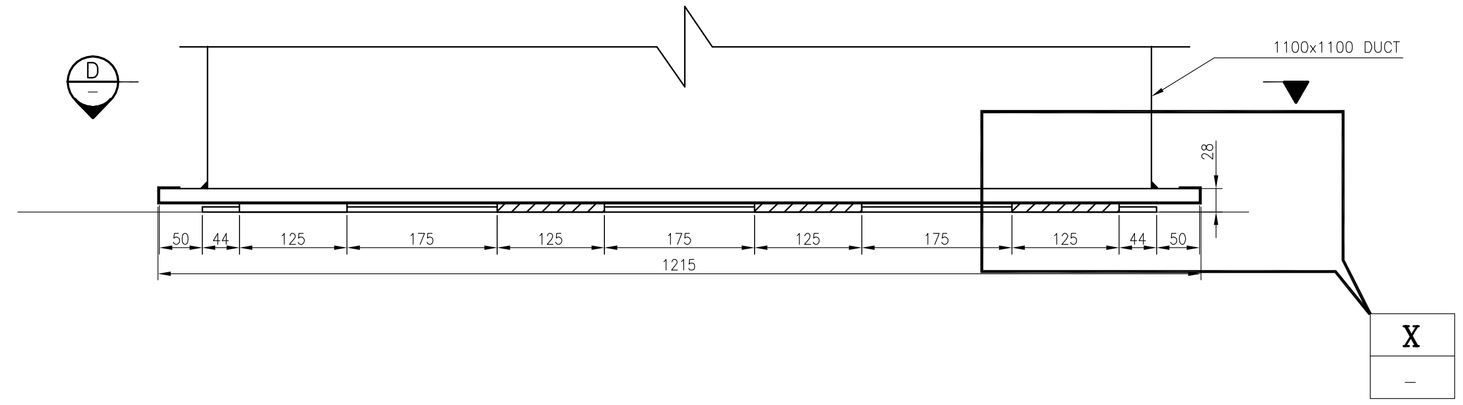

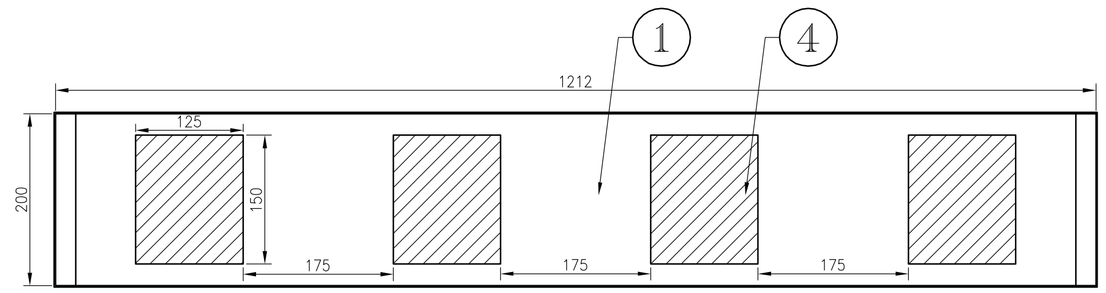

SECTION D
SCALE = 1:5

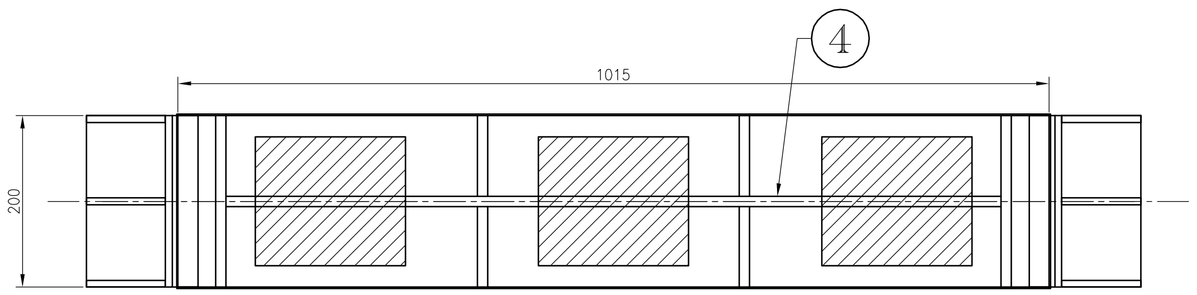

SECTION A
SCALE = 1:1

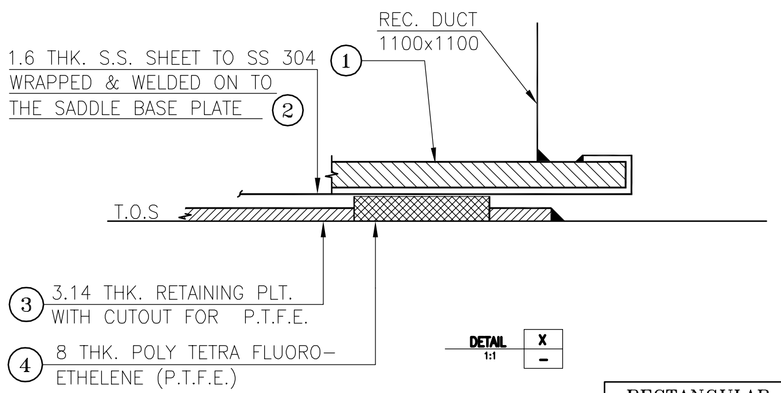

DETAIL X 1:1

GUIDE SUPPORT FOR 1100x1100 DUCT									
		4	P.T.F.E 175x150x8thk	–		4			
		3	PL 1112x200x6thk	–	10.5	1	10.5	ASTM A36	10.5
		2	PL 0.31 Sq.m. (1.6 THK.)	–	3.9	1	3.9	SS 304	3.9
		1	PL 1212x200x12thk	–	20.3	1	20.3	ASTM A36	20.3
EREC. MARK	SL. NO.	ITEM NO.	DESCRIPTION	UNIT WT.OF MATERIAL	UNIT WT./PC KGS.	QTY. OF ITEM	TOTAL WT. (KGS)	SPECIFICATION & GRADE	WT. OF EREC. MARK

GUIDE SUPPORT FOR DN1200 DUCT									
		11	PL 90x90x8thk	–	0.51	4	2.04	ASTM A36	2.04
		10	ISA100x100x8x200LG.	–	2.42	2	4.84	ASTM A36	4.84
		9	PL 200x30x10thk	–	0.5	2	1	ASTM A36	1
		8	P.T.F.E 175x150x8thk	–		3			
		7	PL 915x200x6thk	–	8.62	1	8.62	ASTM A36	8.62
		6	PL 0.3 Sq.m. (1.6 THK.)	–	3.8	1	3.8	SS 304	3.8
		5	PL 1015x200x24thk	–	38.25	1	38.25	ASTM A36	38.25
		4	PL 905x300x12thk	–	25.6	1	25.6	ASTM A36	25.6
		3	PL 125x96x12thk	–	1.13	4	4.52	ASTM A36	4.52
		2	PL 312x200x12thk	–	5.88	2	5.88	ASTM A36	11.76
		1	PL 1286x200x12thk	–	24.23	1	24.23	ASTM A36	24.23
EREC. MARK	SL. NO.	ITEM NO.	DESCRIPTION	UNIT WT.OF MATERIAL	UNIT WT./PC KGS.	QTY. OF ITEM	TOTAL WT. (KGS)	SPECIFICATION & GRADE	WT. OF EREC. MARK

SADDLE DETAILS & GAP BETN. SADDLE AND GUIDE PLATE FOR LADLE & TUNDISH WREAKING

SUPPT. PT	TYP. OF SUPPT	TOS	GAP BETN. GUIDE & SADDLE PL. (X)
S1	FREE	+5322	NA
S2	GUIDE	+8650	5MM
S3	FREE	+8650	NA
S4	GUIDE	+8650	5MM
S5	GUIDE	+8650	5MM
S6	GUIDE	+8650	5MM
S8	GUIDE	+8650	5MM
S9	GUIDE	+8650	10MM
S10	GUIDE	+8650	10MM
S12	GUIDE	+8650	5MM
S13	GUIDE	+8650	5MM
S14	GUIDE	+8650	5MM
S16	FREE	+8650	NA
S17	FREE	+8650	NA
S18	FREE	+8650	NA

RECTANGULAR FREE SUP. 01 NO.
ROUND FREE SUP. 04 NOS.
ROUND GUIDE SUP. 10 NOS.

Controlled Copy For Internal Circulation | UTL

DISTRIBUTION

CUSTOMER		COS	
		ENV	
CONTRACTOR		MNB	
CVL		NFE	
ELE		PWR	
IAC		CNT	
LTL		INS	
STR		PRS	
UTL		CON	
WTS			
COB		CHN–	
CRF		CHN–	
IRM		CHN–	
MMH		MUM–	
PML		MUM–	
RLM		PM	
STM		SITE	

No.	DATE	ZONE	REMARKS	BY	APP.	DRG. No./DETAILS

REVISION — REFERENCE DRAWINGS

NOTE:
1) ALL DIMENSIONS ARE IN mm
2) FOR SUPPORT MARKING, REF. LAYOUT DRG. NO. 28763-63A-VBD-UTL-0071.

N O T E S

A P P R O V A L

APPROVED FOR CONSTRUCTION
SIGNATURE:
DATE: 31/10/2017
M.N.DASTUR AND COMPANY (P) LTD. KOLKATA

REV	DEPT	BY	DATE

DASTUR
M. N. DASTUR & COMPANY (P) LTD
CONSULTING ENGINEERS, KOLKATA

SCALE	1:1	DATE
DSGND. BY		30.10.2017
DRAWN BY	MNGA	30.10.2017
CHKD. BY		31.10.2017
APPVD. BY		31.10.2017

FOR GPH **GPH ISPAT LIMITED**
CHITTAGONG,BANGLADESH

GPH DRG. No.

INSTALLATION OF 0.8 MTPY INTEGRATED STEEL PLANT PROJECT
GUIDE SADDLE SUPPORT FOR LADLE AND TUNDISH WREAKING FES DUCT

This drawing is the property of M. N. DASTUR & COMPANY (P) LTD and is issued for the specific project mentioned herein. This is not to be copied or used for other projects unless expressly permitted by M. N. DASTUR & COMPANY (P) LTD

JOB No. 28763 | DRG. No. 28763-63A-VBD-UTL-0085 | REV. 0