DRG. No. 28763-63A-VBD-UTL-0071 REV. 0

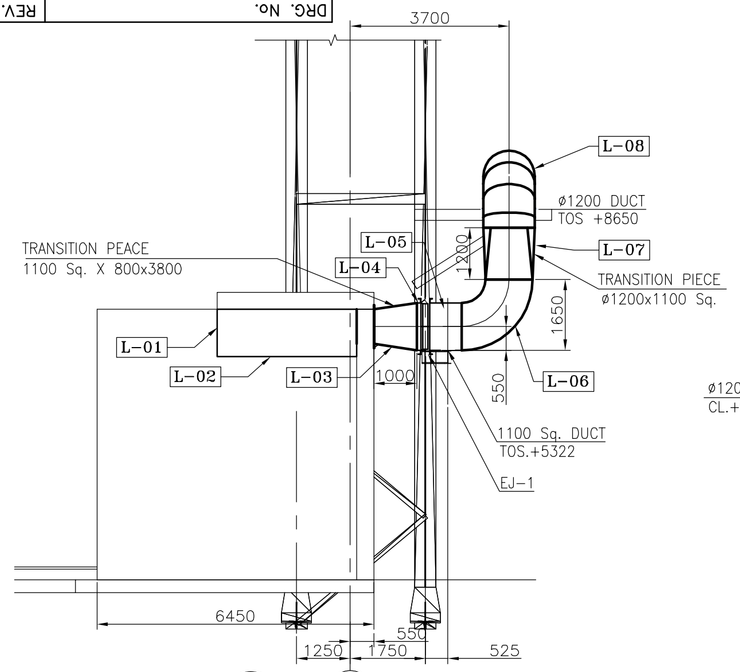

SECTION A
SCALE = 1:100

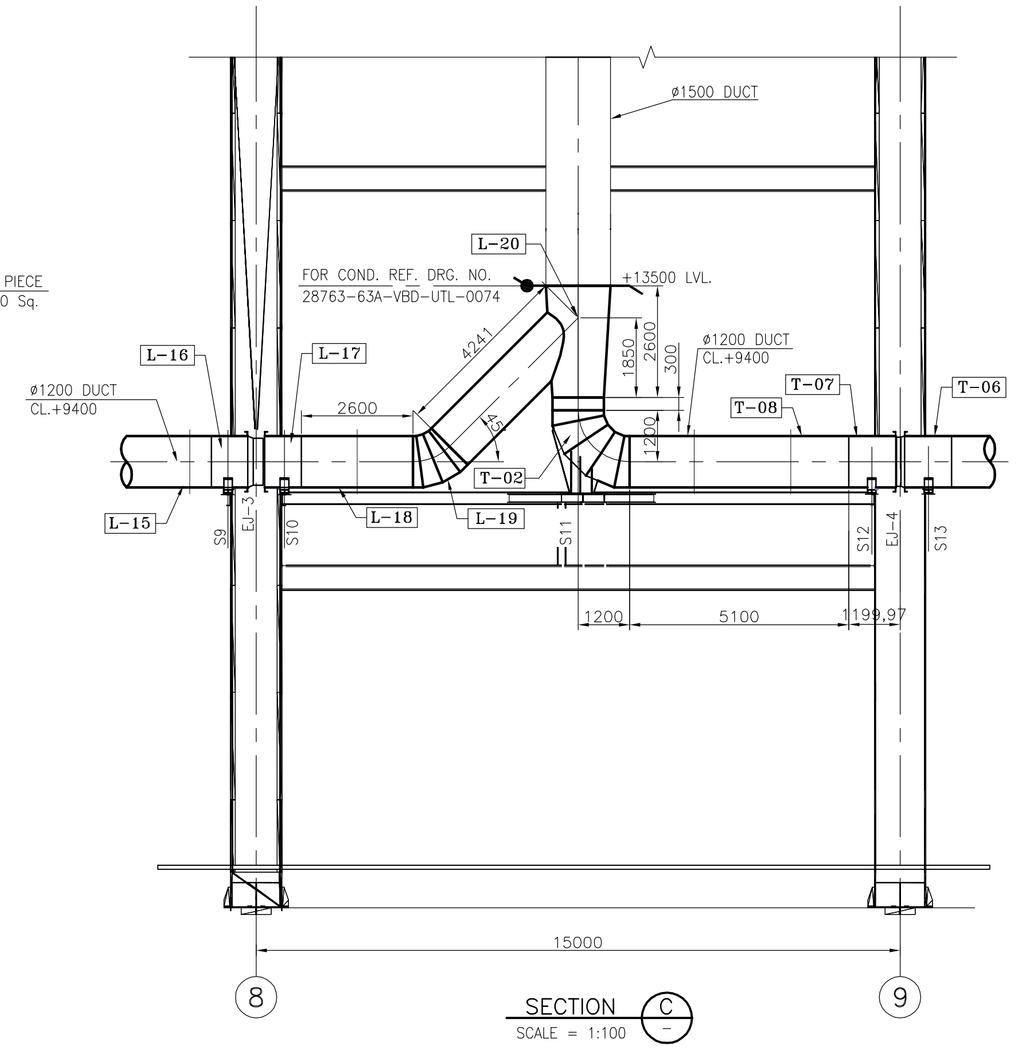

SECTION C
SCALE = 1:100

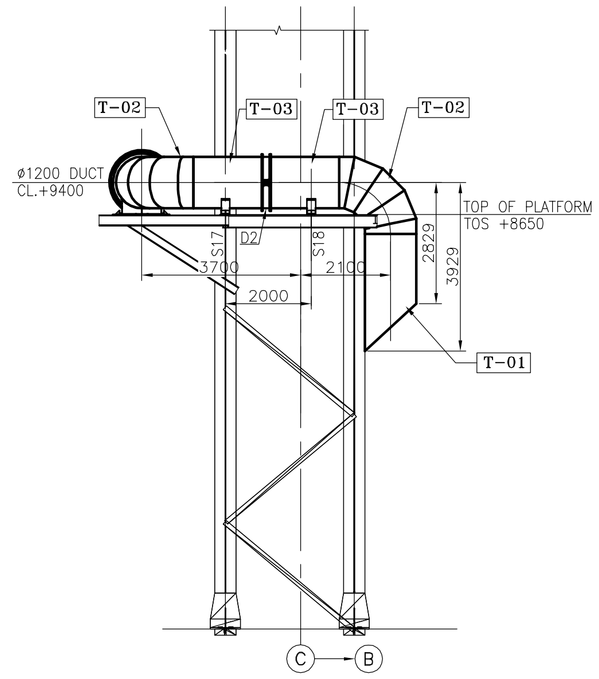

SECTION D
SCALE = 1:100

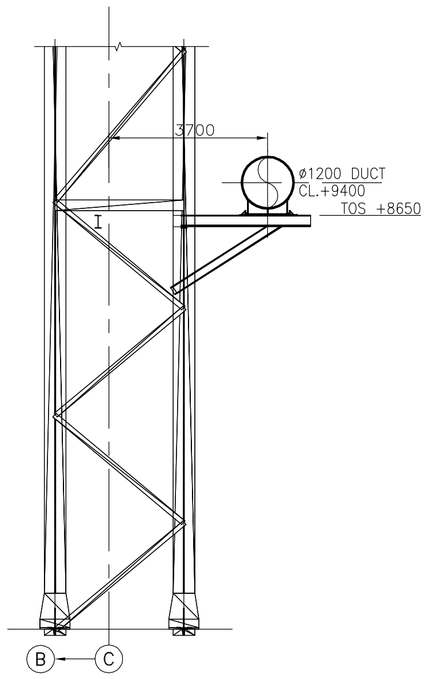

SECTION E
SCALE = 1:100

SUPPORT DETAILS, OPERATING PARAMETERS, LIST OF EXP JT & DAMPERS FOR LADLE & TUNDISH WREAKING DUCT				
SUPPT. PT	TYP. OF SUPPT	TOS	OPERATING PARAMETERS	
S1	FREE	+5322		
S2	GUIDE	+8650	DUCT DIA	1200MM
S3	FREE	+8650	DUCT THICKNESS	6MM
S4	GUIDE	+8650	STIFFNERS THK.	8MM
S5	GUIDE	+8650	GAS TEMP	60degC
S6	GUIDE	+8650	WORKING PR.	600MMWC
S7	FIXED	+8650	MATERAIL OF CONS	ASTM A36
S8	GUIDE	+8650		
S9	GUIDE	+8650	LIST OF EXPANSION JOINT	
S10	GUIDE	+8650	EJ-1	C-LY70-EE-18-43-MYF0100
S11	FIXED	+8650	EJ-2	C-LY70-EE-18-43-MYF0100
S12	GUIDE	+8650	EJ-3	C-LY70-EE-18-43-MYF0300
S13	GUIDE	+8650	EJ-4	C-LY70-EE-18-53-MYF0100
S14	GUIDE	+8650		
S15	FIXED	+8650	LIST OF DAMPER	
S16	FREE	+8650	D1	C-LY70-EE-18-44-MJ-Z5Z101
S17	FREE	+8650	D2	C-LY70-EE-18-54-MJ-Z5Z101
S18	FREE	+8650		

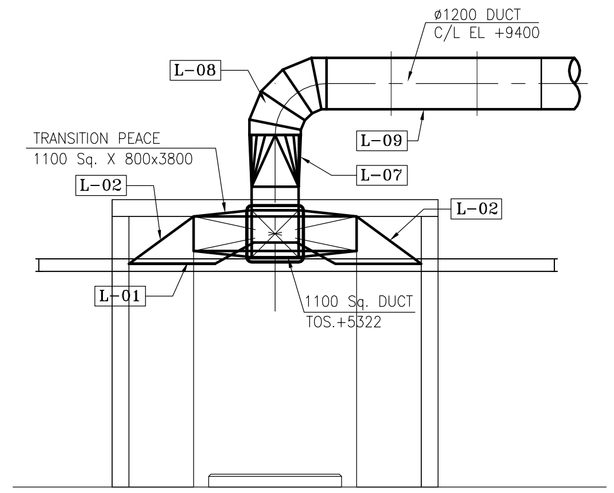

SECTION B
SCALE = 1:100

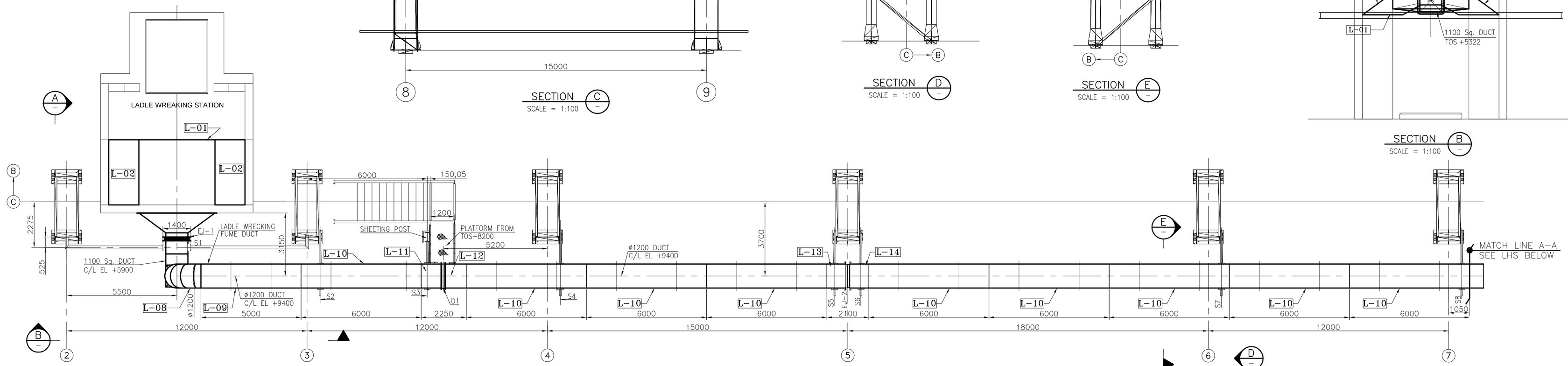

PLAN

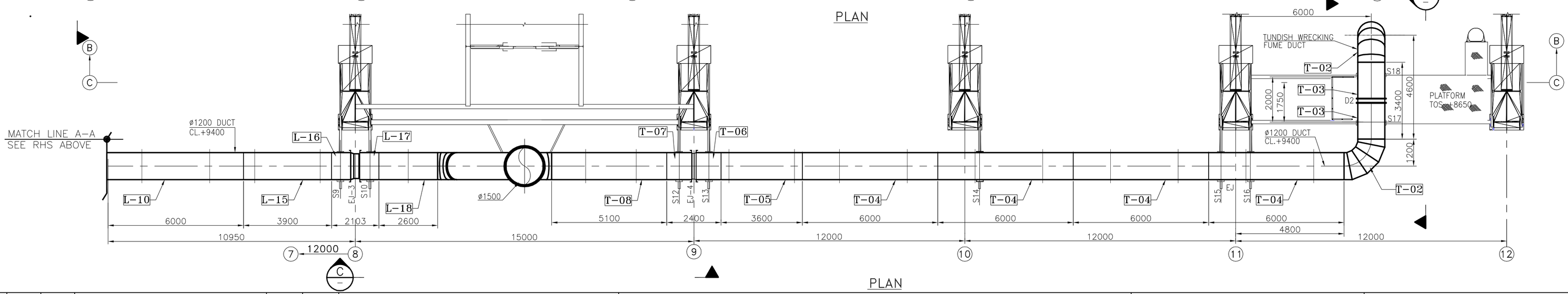

PLAN

Controlled Copy For Internal Circulation	UTL

DISTRIBUTION

CUSTOMER		COS	
		ENV	
CONTRACTOR		MNB	
CVL		NFE	
ELE		PWR	
IAC		CNT	
LTL		INS	
STR		PRS	
UTL		CON	
WTS			
COB		CHN-	
CRF		CHN-	
IRM		CHN-	
MMH		MUM-	
PML		MUM-	
RLM		PM	
STM		SITE	

No.	DATE	ZONE	REMARKS	BY	APP.	DRG. No./DETAILS

REVISION — REFERENCE DRAWINGS

NOTES

NOTE:
1. ALL DIMENSION ARE IN MM UNLESS OTHERWISE STATED.
2. FOR SUPPORT MARKING AND SADDLE DETAIL REFER DRG. NO. 28763-63A-VBD-UTL-0083, 0084 & 0085.
3. F.F.L (FINISHED FLOOR LEVEL) ±0.00 CORRESPONDING TO RL +7.1M.
4. F.G.L (FINISHED GROUND LEVEL) -600 CORRESPONDING TO RL +6.5M.

APPROVAL

REV	DEPT	BY	DATE

APPROVED FOR CONSTRUCTION
SIGNATURE:
DATE: 31/10/2017
M.N.DASTUR AND COMPANY (P) LTD. KOLKATA

This drawing is the property of M. N. DASTUR & COMPANY (P) LTD and is issued for the specific project mentioned herein. This is not to be copied or used for other projects unless expressly permitted by M. N. DASTUR & COMPANY (P) LTD

DASTUR

M. N. DASTUR & COMPANY (P) LTD
CONSULTING ENGINEERS, KOLKATA

SCALE	1:100	DATE
DSGND. BY		02.06.2017
DRAWN BY	MNGA	02.06.2017
CHKD. BY		31.10.2017
APPVD. BY		31.10.2017

FOR GPH **GPH ISPAT LIMITED**
CHITTAGONG,BANGLADESH

GPH DRG. No.

INSTALLATION OF 0.8 MTPY INTEGRATED STEEL PLANT PROJECT
GA & MARKING DRAWING OF FES DUCT FOR LADLE & TUNDISH WREAKING STATION

JOB No. 28763 | DRG. No. 28763-63A-VBD-UTL-0071 | REV. 0