SUPPORT DETAILS, OPERATING PARAMETERS, LIST OF EXP JT & DAMPERS FOR LF FUME EXTRACTION DUCT				
SUPPT. PT	TOS	TYP. OF SUPPT	OPERATING PARAMETERS	
S1	+13250	GUIDE	DUCT DIA X THK	1000MMX6MM
S2/1	+13250	GUIDE	STIFFNERS THK.	8MM
S2/2	+13250	GUIDE	GAS TEMP.	120degC
S3	+13250	GUIDE	WORKING PR.	600MMWC
S4	+13250	GUIDE	MOC	ASTM A36
S5	+13250	FIXED	LIST OF EXPANSION JOINT	
S6	+13250	FREE	EJ-1	C-LY70-EE-19-73-MYF0100
S7	+13250	FREE	EJ-2	C-LY70-EE-19-73-MYF0200
S8	+11000	VERTICAL REST	EJ-3	C-LY70-EE-19-73-MYF0300
S9	+5350	GUIDE	LIST OF DAMPER	
S10	+5350	GUIDE	D1	C-LY70-EE-19-74-MJ-Z5Z101

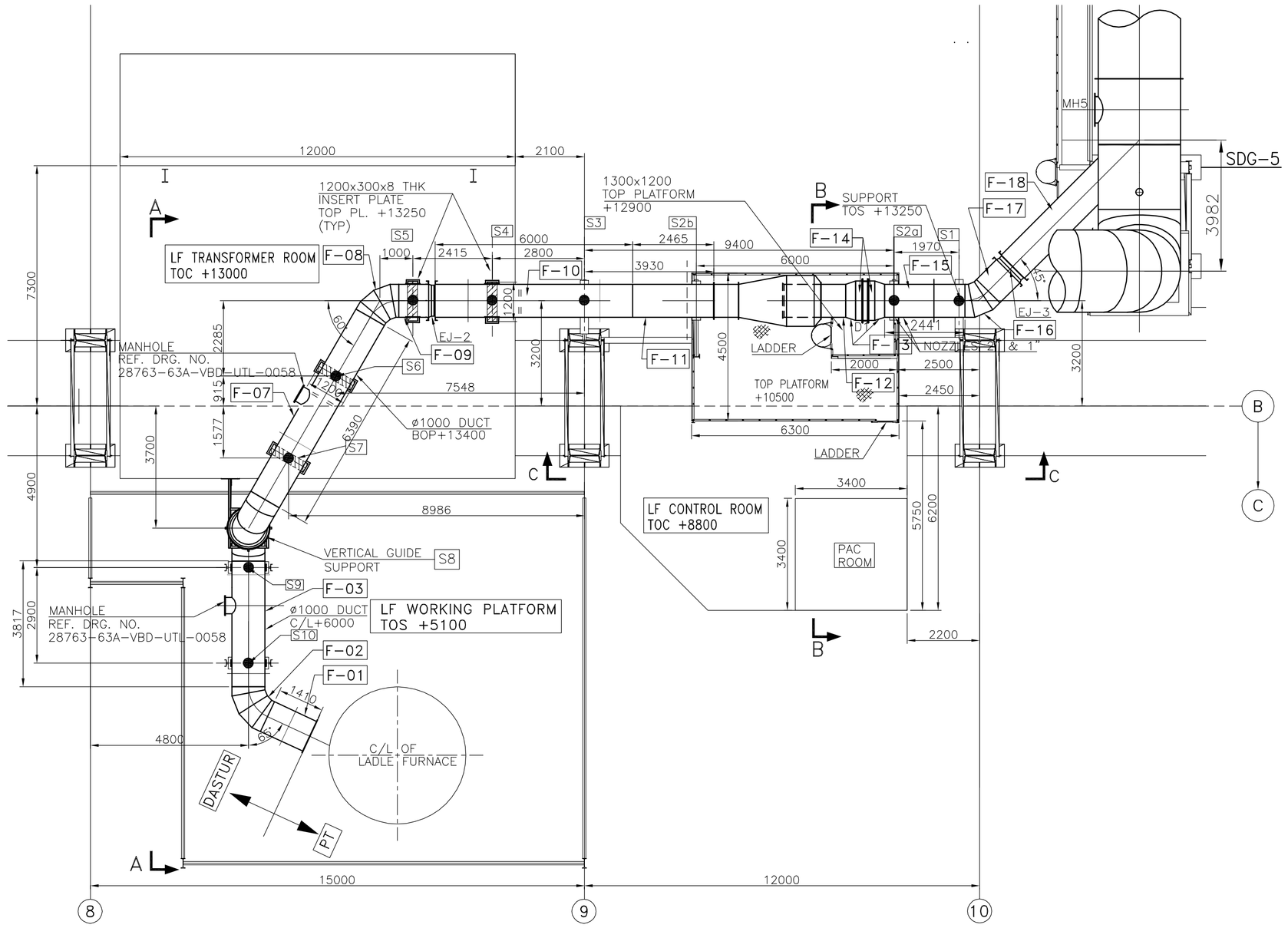

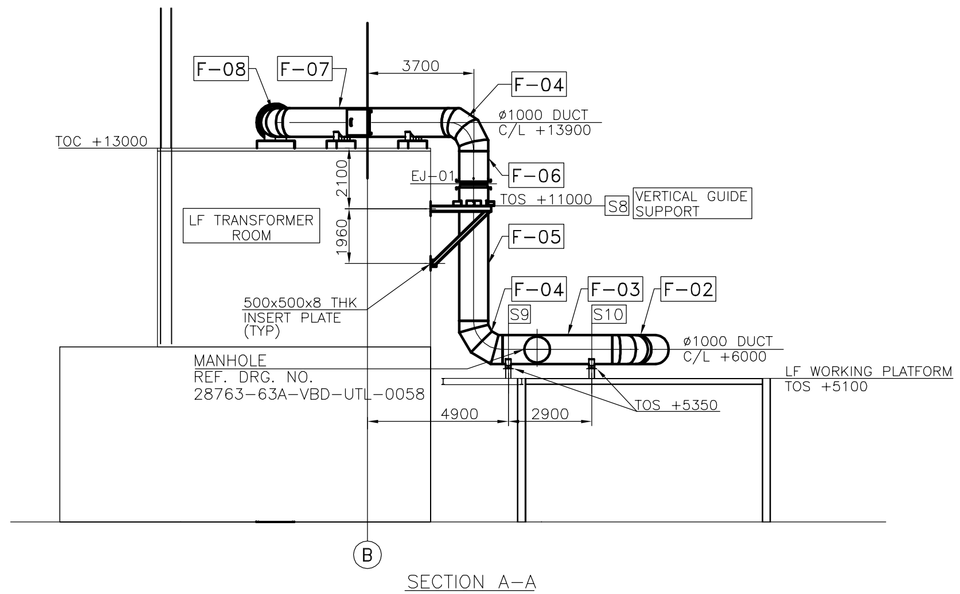

SECTION A-A

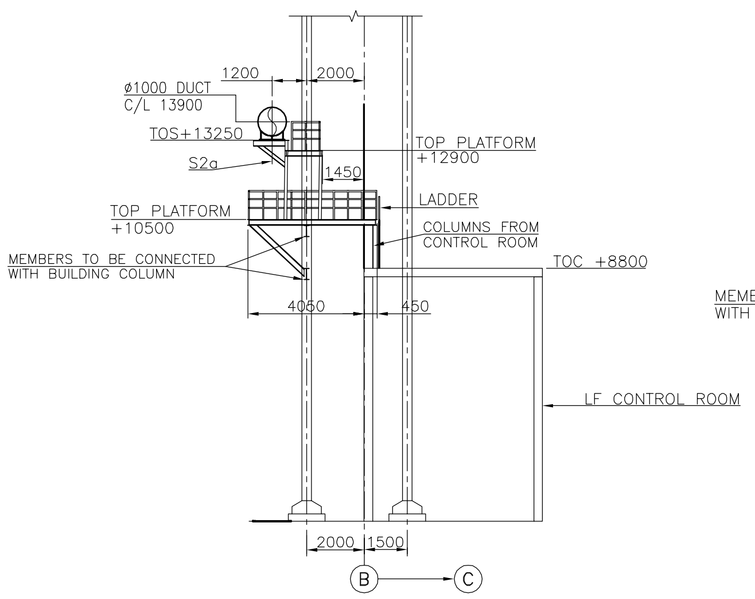

SECTION B-B

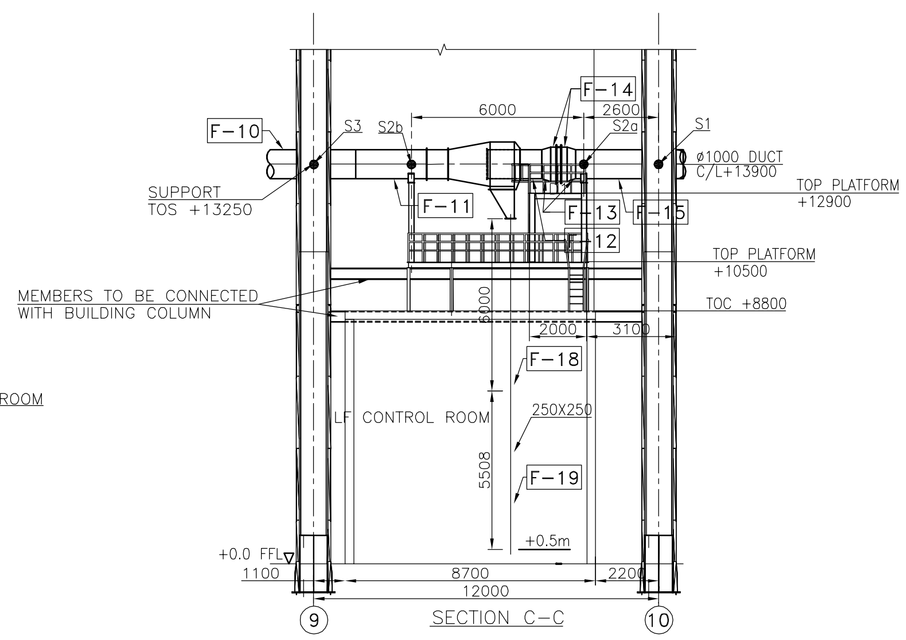

SECTION C-C

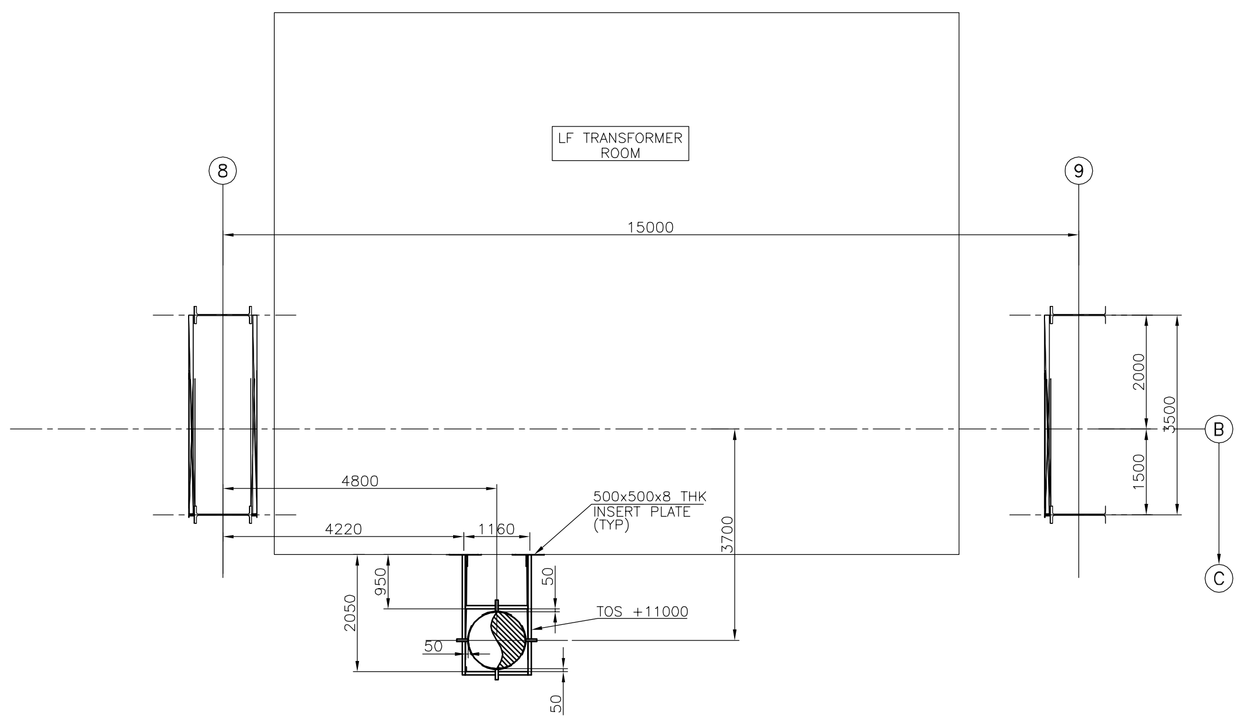

Controlled Copy For Internal Circulation	UTL

DISTRIBUTION

CUSTOMER		COS	
		ENV	
CONTRACTOR		MNB	
CVL		NFE	
ELE		PWR	
IAC		CNT	
LTL		INS	
STR		PRS	
UTL		CON	
WTS			
COB		CHN-	
CRF		CHN-	
IRM		CHN-	
MMH		MUM-	
PML		MUM-	
RLM		PM	
STM		SITE	

No.	DATE	ZONE	REMARKS	BY	APP.	DRG. No./DETAILS

REVISION — REFERENCE DRAWINGS

NOTES

NOTE:
1) ALL DIMENSIONS ARE IN mm
2) FOR SUPPORT MARKING AND SADDLE DETAIL REF DRG. NO. 28763-63A-VBD-UTL-0081& 0082.
3) F.F.L (FINISHED FLOOR LEVEL) ±0.00 CORRESPONDING TO RL +7.1 M
4) F.G.L (FINISHED GROUND LEVEL) -600 CORRESPONDING TO RL +6.5 M

APPROVAL

APPROVED FOR CONSTRUCTION
SIGNATURE:
DATE: 31/10/2017
M.N.DASTUR AND COMPANY (P) LTD. KOLKATA

REV	DEPT	BY	DATE

SCALE	-	DATE
DSGND. BY		10.07.2017
DRAWN BY	JNMO	10.07.2017
CHKD. BY		31.10.2017
APPVD. BY		31.10.2017

DASTUR
M. N. DASTUR & COMPANY (P) LTD
CONSULTING ENGINEERS, KOLKATA

FOR GPH ISPAT LIMITED
CHITTAGONG,BANGLADESH

GPH DRG. No.
INSTALLATION OF 0.8 MTPY INTEGRATED STEEL PLANT PROJECT
GA & MARKING OF FUME EXTRACTION DUCT FOR LADLE FURNACE

This drawing is the property of M. N. DASTUR & COMPANY (P) LTD and is issued for the specific project mentioned herein. This is not to be copied or used for other projects unless expressly permitted by M. N. DASTUR & COMPANY (P) LTD

JOB No. 28763 | DRG. No. 28763-63A-VBD-UTL-0069 | REV. 0