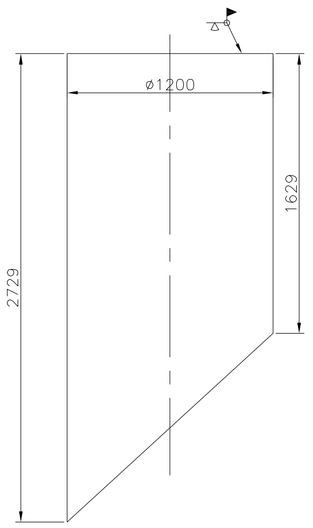

DUCT PART MKD.
28763-UTL-0071/T-01
QTY. – 01 NO.

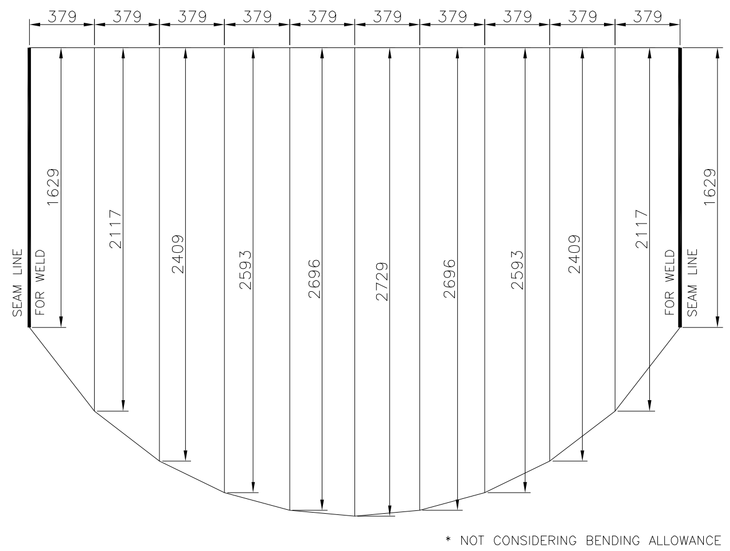

DEVELOPMENT
DUCT PART MKD.
28763-UTL-0071/T-01
QTY. – 01 NO.

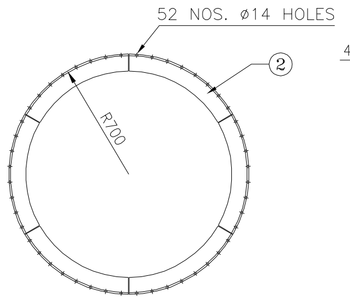

SECTION B
SCALE = 1:25

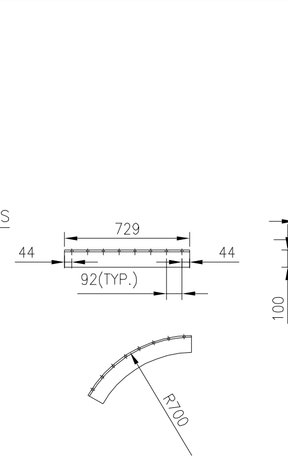

ITEM MARKED. 2
ANGLE PIECE
QTY. – 36 NOS.

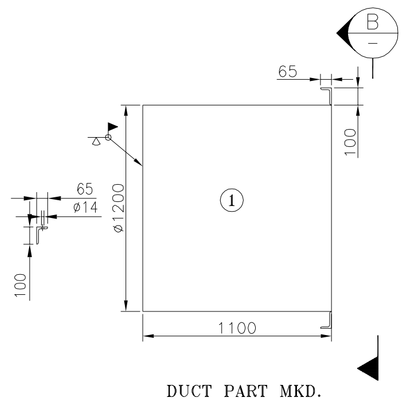

DUCT PART MKD.
28763-UTL-0071/T-07
QTY. – 01 NO.

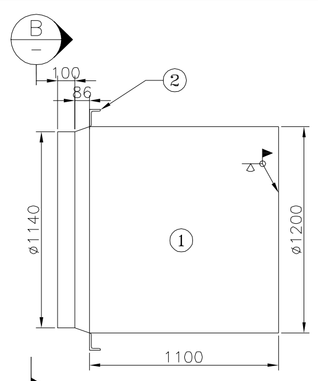

DUCT PART MKD.
28763-UTL-0071/T-06
QTY. – 01 NO.

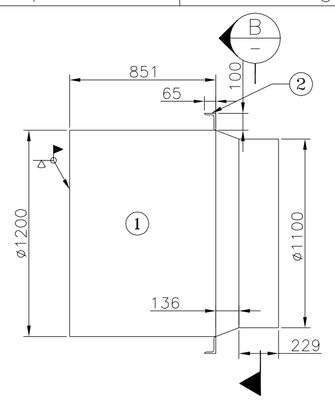

DUCT PART MKD.
28763-UTL-0071/L-16
QTY. – 01 NO.

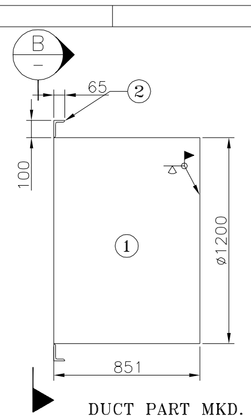

DUCT PART MKD.
28763-UTL-0071/L-17
QTY. – 01 NO.

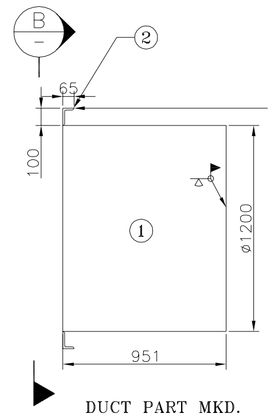

DUCT PART MKD.
28763-UTL-0071/L-14
QTY. – 01 NO.

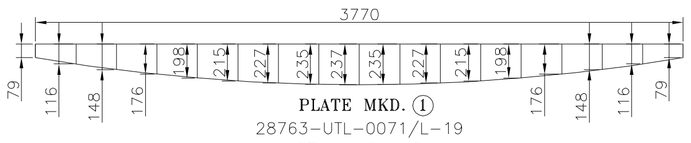

PLATE MKD. 1
28763-UTL-0071/L-19
QTY. – 01 NO.

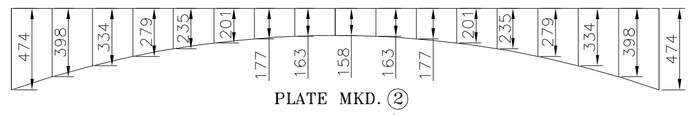

PLATE MKD. 2
28763-UTL-0071/L-19
QTY. – 01 NO.

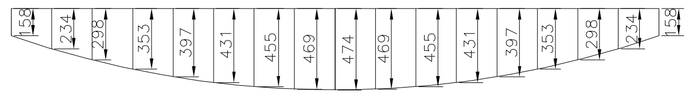

PLATE MKD. 3
28763-UTL-0071/L-19
QTY. – 01 NO.

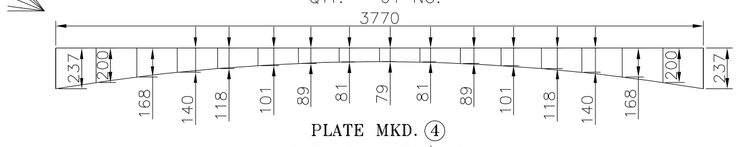

PLATE MKD. 4
28763-UTL-0071/L-19
QTY. – 01 NO.

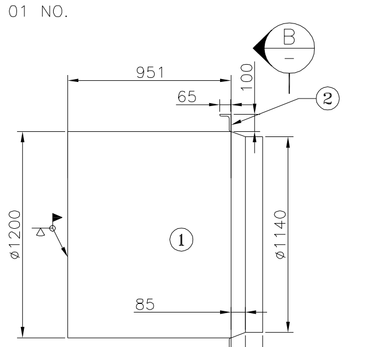

DUCT PART MKD.
28763-UTL-0071/L-13
QTY. – 01 NO.

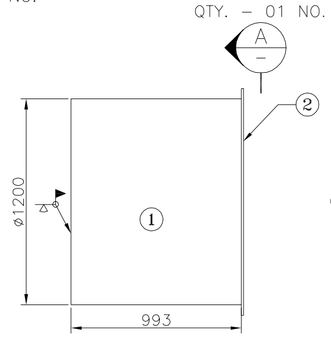

DUCT PART MKD.
28763-UTL-0071/L-11
QTY. – 01 NO.

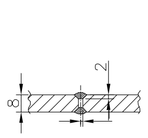

DETAIL 2
(SCALE-1:2)

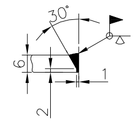

TYP. EDGE PREPARATION OF DUCT
(SCALE-1:2)

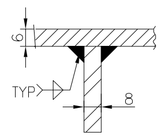

SECTION X-X
(SCALE-1:2)

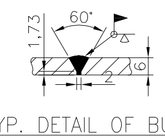

TYP. DETAIL OF BUTT WELDING JOINT OF DUCT
(SCALE-1:2)

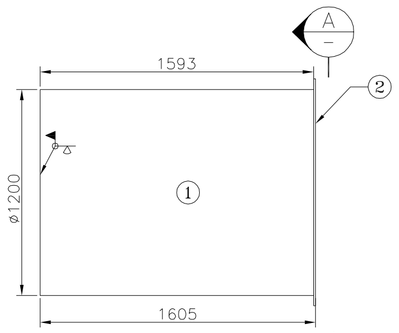

DUCT PART MKD.
28763-UTL-0071/T-03
QTY. – 02 NOS.

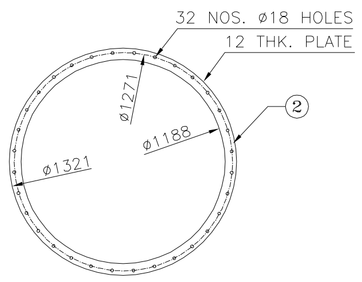

SECTION A
SCALE = 1:25

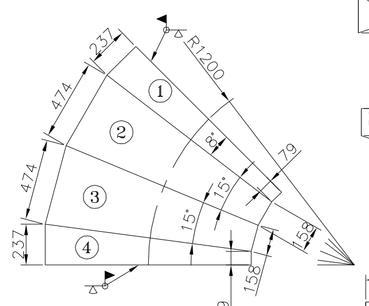

DUCT PART MKD.
28763-UTL-0071/L-19
QTY. – 01 NO.

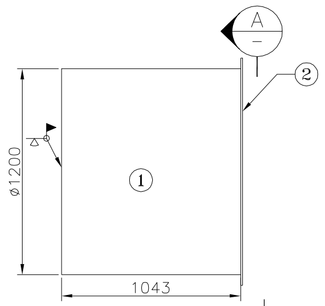

DUCT PART MKD.
28763-UTL-0071/L-12
QTY. – 01 NO.

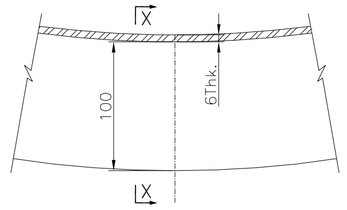

DETAIL 1
(SCALE-1:5)

L-12		2	∠ 0.262 Sq.m. 12Thk.	–	25	1	25	ASTM A36	213
		1	∠ 3770x1043x6Thk.	–	188	1	188	ASTM A36	
L-11		2	∠ 0.262 Sq.m. 12Thk.	–	25	1	25	ASTM A36	204
		1	∠ 3770x993x6Thk.	–	179	1	179	ASTM A36	
L-14		2	L100x65x851	–	6.7	6	40	ASTM A36	211
		1	∠ 3770x951x6Thk.	–	171	1	171	ASTM A36	
L-13		2	L100x65x851	–	6.7	6	40	ASTM A36	245
		1	∠ 3770x1136x6Thk.	–	205	1	205	ASTM A36	
L-17		2	L100x65x851	–	6.7	6	40	ASTM A36	238
		1	∠ 3770x1100x6Thk.	–	198	1	198	ASTM A36	
L-16		2	L100x65x729	–	5.5	6	33	ASTM A36	252
		1	∠ 3770x1216x6Thk.	–	219	1	219	ASTM A36	
L-19		4	∠ 0.5 Sq.m. (6Thk.)	–	23	1	23	ASTM A36	169
		3	∠ 1.4 Sq.m. (6Thk.)	–	66	1	66	ASTM A36	
		2	∠ 1.0 Sq.m. (6Thk.)	–	47	1	47	ASTM A36	
		1	∠ 0.7 Sq.m. (6Thk.)	–	33	1	33	ASTM A36	
T-20		2	∠ 3872x3770x6Thk.	–	697	1	697	ASTM A36	1342
		1	∠ 4712x2904x6Thk.	–	645	1	645	ASTM A36	
T-07		2	L100x65x729	–	5.5	6	33	ASTM A36	231
		1	∠ 3770x1100x6Thk.	–	198	1	198	ASTM A36	
T-06		2	L100x65x729	–	5.5	6	33	ASTM A36	264
		1	∠ 3770x1286x6Thk.	–	231	1	231	ASTM A36	
T-03		2	∠ 0.262 Sq.m. 12Thk.	–	25	2	117	ASTM A36	310
		1	∠ 3770x1593x6Thk.	–	285	2	570	ASTM A36	
T-01		1	∠ 9.14 Sq.m. (6Thk.)	–	430	1	430	ASTM A36	430
EREC. MARK	SL. NO.	ITEM NO.	DESCRIPTION	UNIT WT.OF MATERIAL	UNIT WT./PC KGS.	QTY. OF ITEM	TOTAL WT. (KGS)	SPECIFICATION & GRADE	WT. OF EREC. MARK

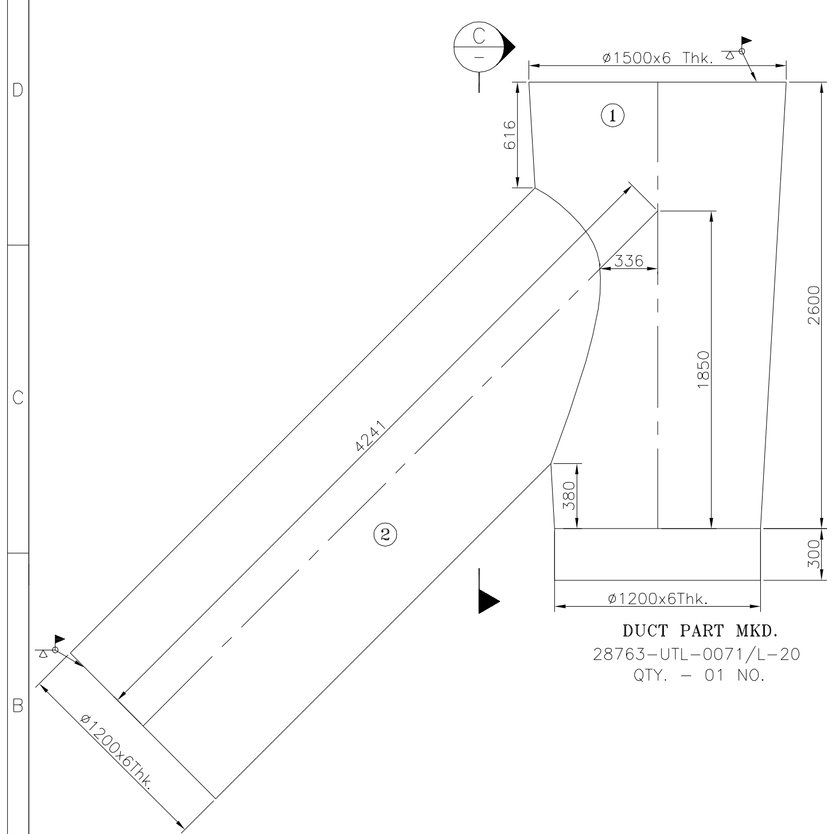

DUCT PART MKD.
28763-UTL-0071/L-20
QTY. – 01 NO.

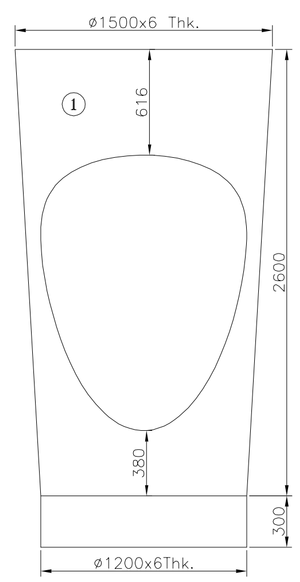

SECTION C
SCALE = 1:25

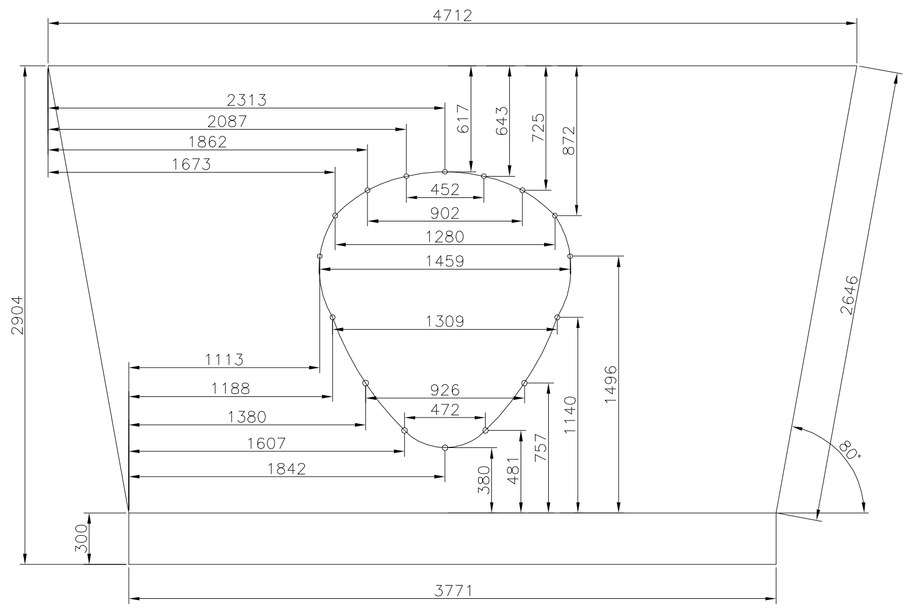

PLATE MKD. 1
28763-UTL-0071/L-20
QTY. – 01 NO.

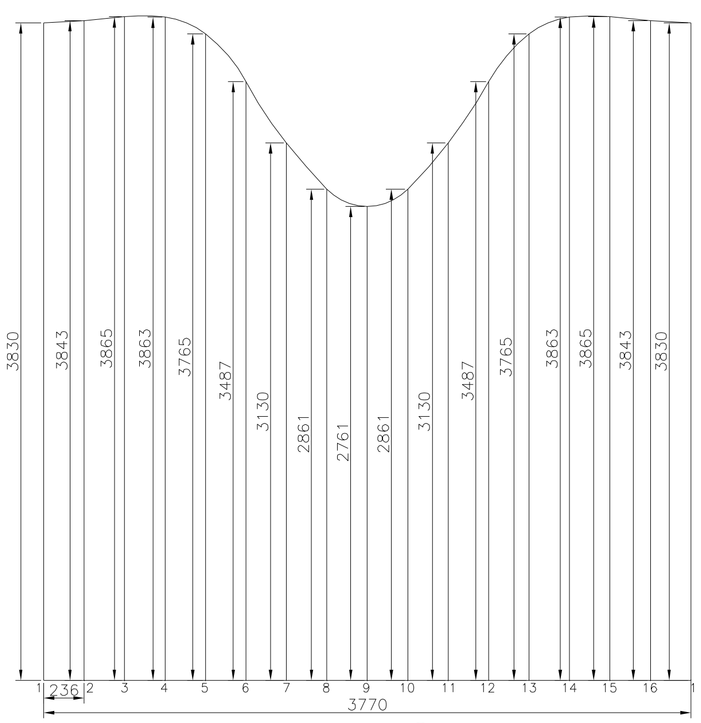

PLATE MKD. 2
28763-UTL-0071/L-20
QTY. – 01 NO.

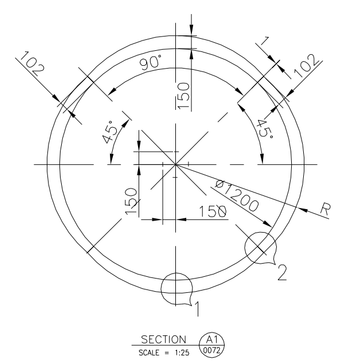

SECTION A1
SCALE = 1:25

Controlled Copy For Internal Circulation | UTL

DISTRIBUTION

CUSTOMER		COS	
		ENV	
CONTRACTOR		MNB	
CVL		NFE	
ELE		PWR	
IAC		CNT	
LTL		INS	
STR		PRS	
UTL		CON	
WTS			
COB		CHN–	
CRF		CHN–	
IRM		CHN–	
MMH		MUM–	
PML		MUM–	
RLM		PM	
STM		SITE	

No.	DATE	ZONE	REMARKS	BY	APP.	DRG. No./DETAILS

REVISION — REFERENCE DRAWINGS

NOTES

1) ALL DIMENSIONS ARE IN mm
2) FOR SUPPORT MARKING DETAIL REF LAYOUT DRG. NO. 28763-63A-VBD-UTL-0071.
3) F.F.L (FINISHED FLOOR LEVEL) ±0.00 CORRESPONDING TO RL +7.1 M
4) F.G.L (FINISHED GROUND LEVEL) –600 CORRESPONDING TO RL +6.5 M
5) ALL WELDING SHALL BE 4MM FILLET UNLESS OTHERWISE STATED.

APPROVAL

APPROVED FOR CONSTRUCTION
SIGNATURE:
DATE: 31/10/2017
M.N.DASTUR AND COMPANY (P) LTD. KOLKATA

REV	DEPT	BY	DATE

This drawing is the property of M. N. DASTUR & COMPANY (P) LTD and is issued for the specific project mentioned herein. This is not to be copied or used for other projects unless expressly permitted by M. N. DASTUR & COMPANY (P) LTD

DASTUR

M. N. DASTUR & COMPANY (P) LTD
CONSULTING ENGINEERS, KOLKATA

SCALE	1:25	DATE	FOR
DSGND. BY		02.06.2017	GPH ISPAT LIMITED, CHITTAGONG,BANGLADESH
DRAWN BY	MNGA	02.06.2017	GPH DRG. No.
CHKD. BY		31.10.2017	INSTALLATION OF 0.8 MTPY INTEGRATED STEEL PLANT PROJECT
APPVD. BY		31.10.2017	DEATIL OF LADLE & TUNDISH WREAKING FUME EXTRACTION DUCT

JOB No. 28763 | DRG. No. 28763-63A-VBD-UTL-0073 | REV. 0