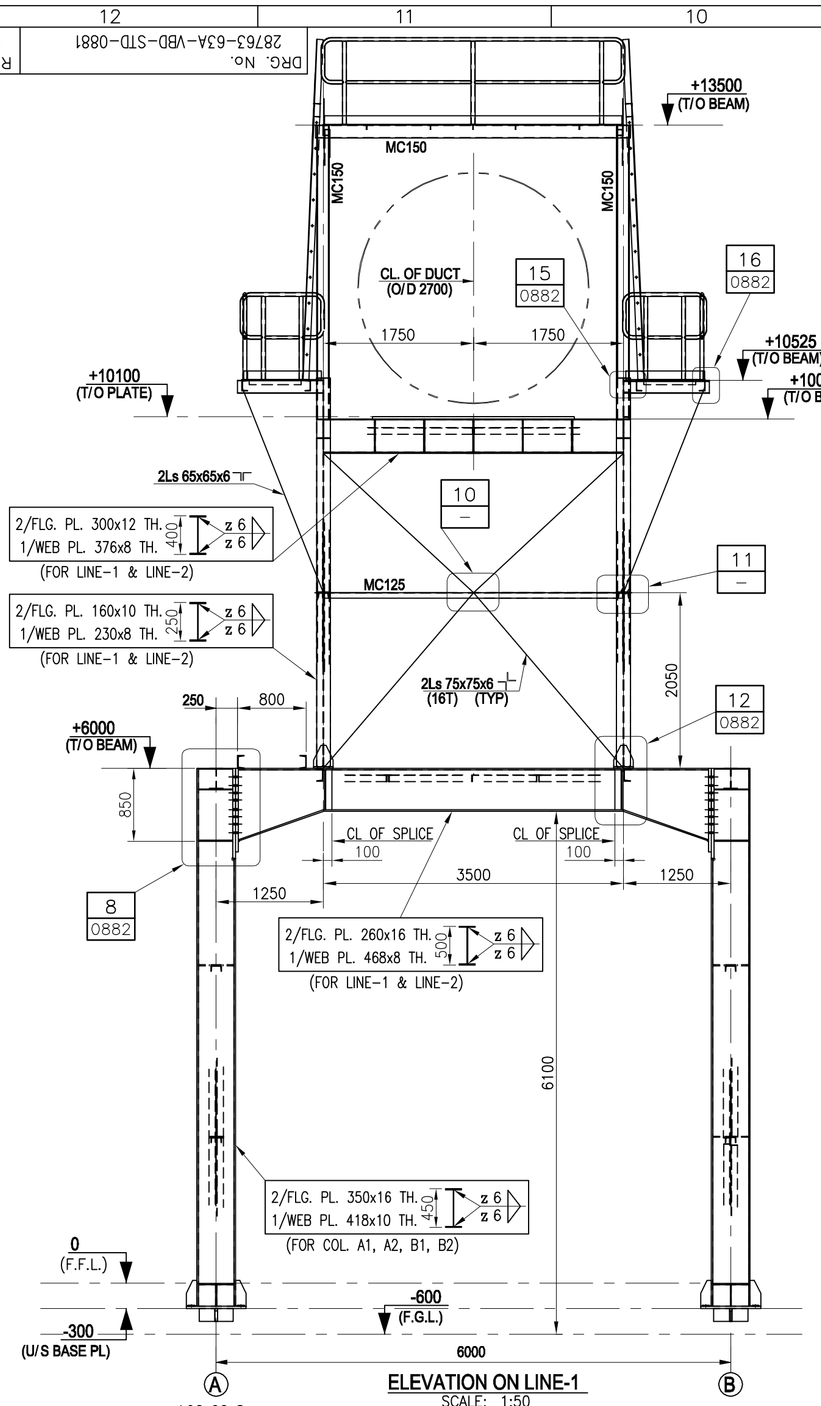

ELEVATION ON LINE-1
SCALE: 1:50

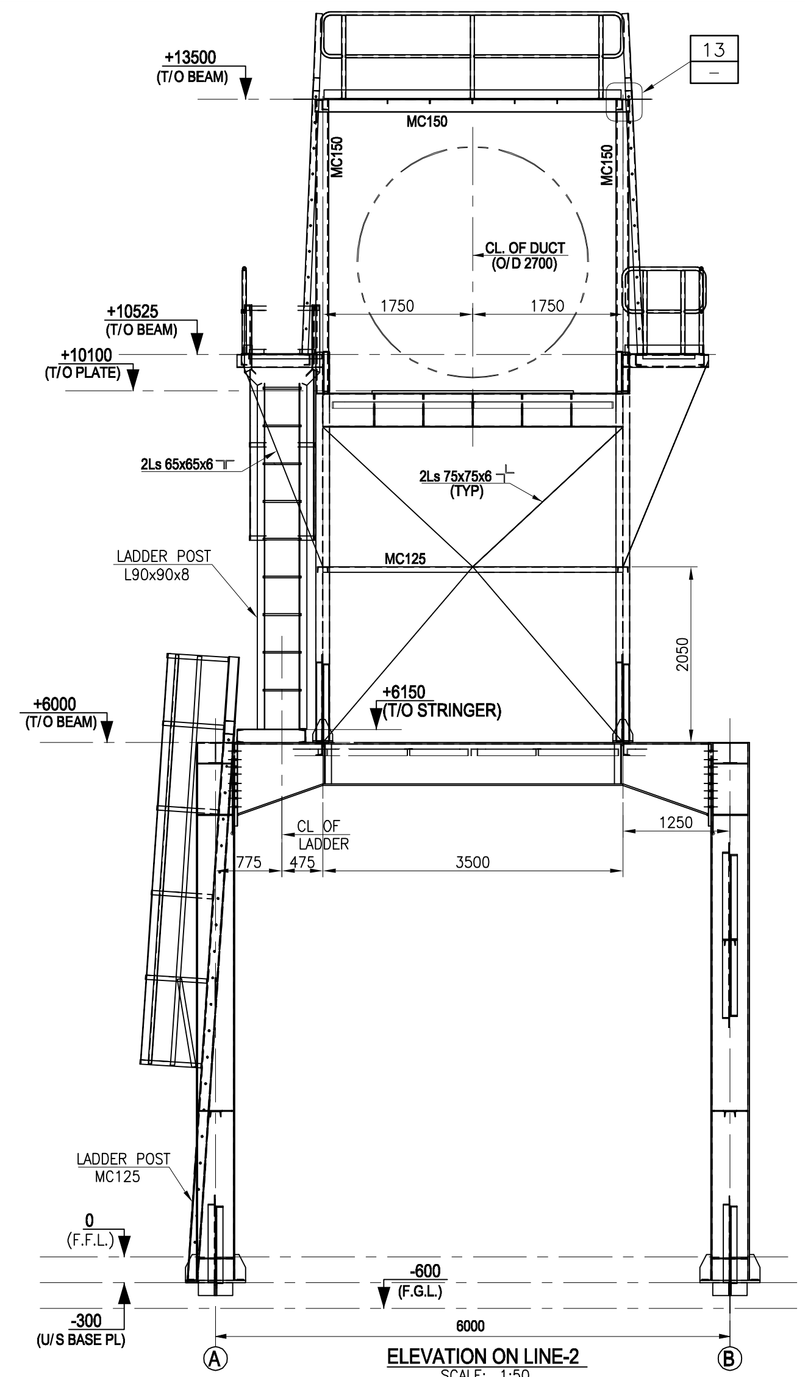

ELEVATION ON LINE-2
SCALE: 1:50

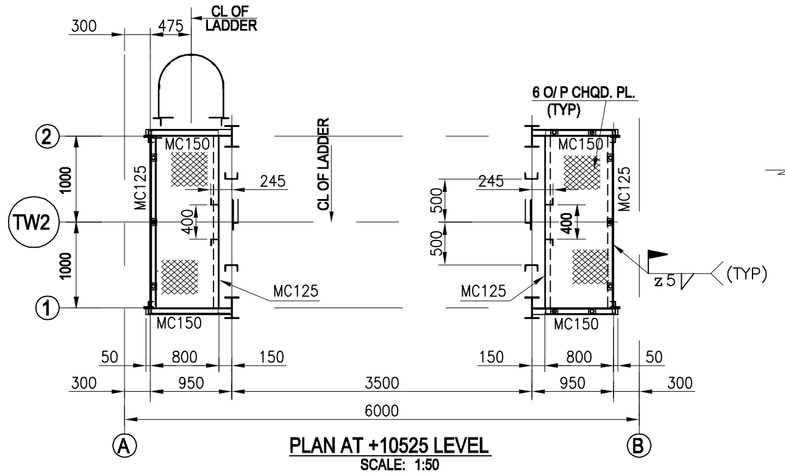

PLAN AT +10525 LEVEL
SCALE: 1:50

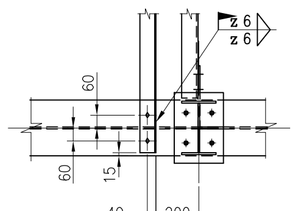

DETAIL 9 –
SCALE = 1:20

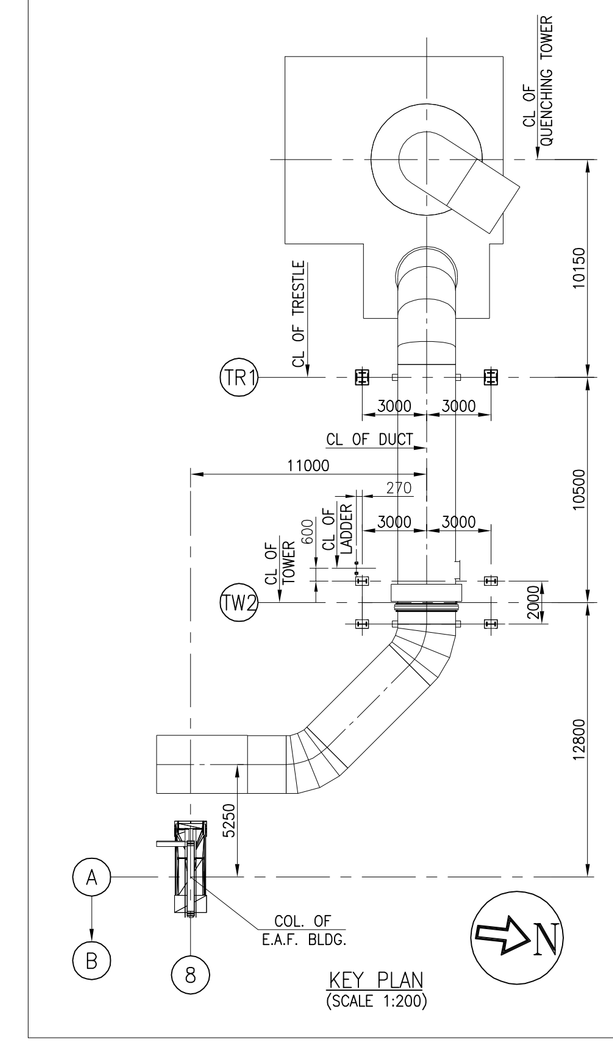

KEY PLAN
(SCALE 1:200)

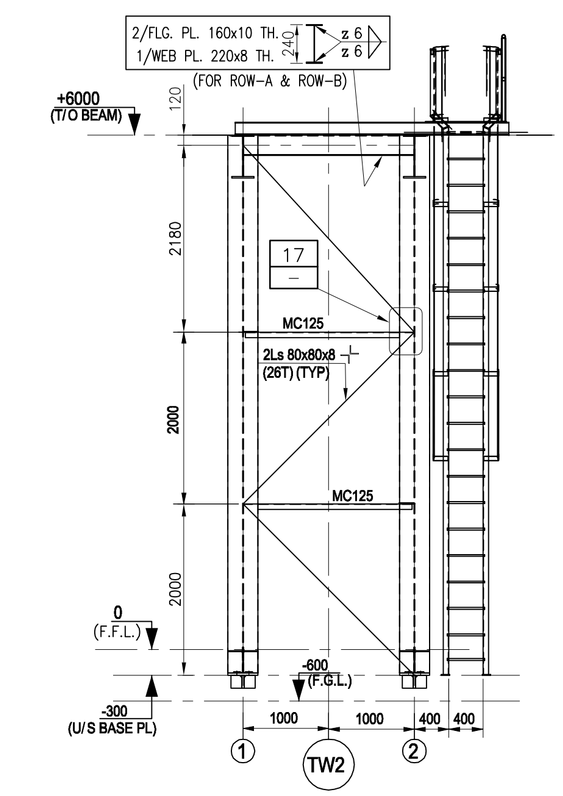

CROSS SECTION ON ROW-A
SCALE: 1:50

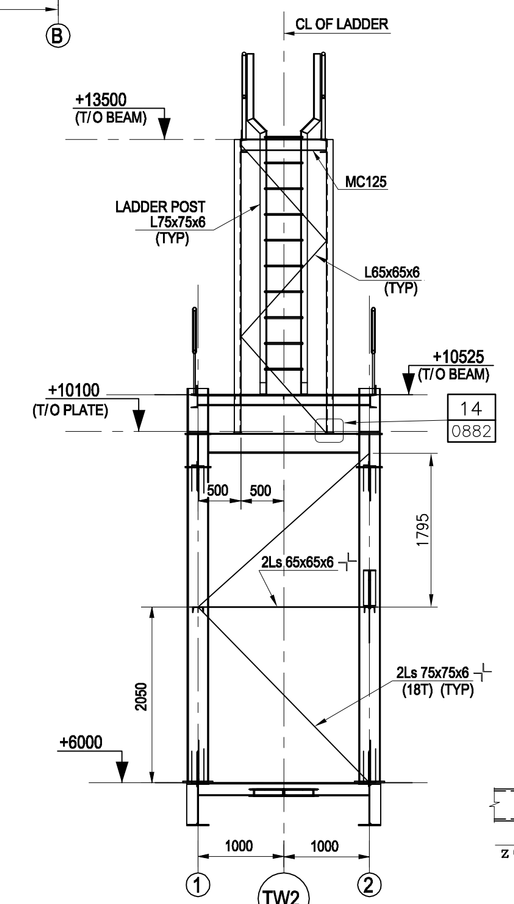

SECTION B-B
(SCALE 1:50)

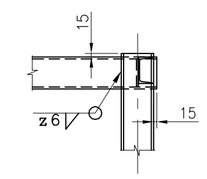

DETAIL 13 –
SCALE = 1:20

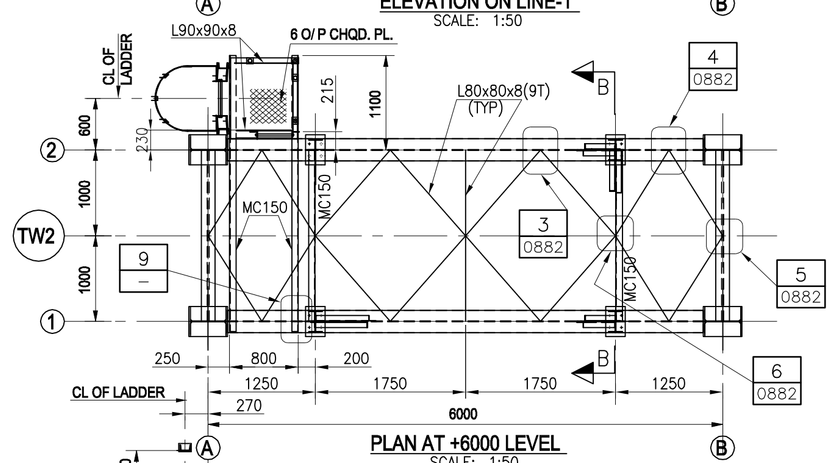

PLAN AT +6000 LEVEL
SCALE: 1:50

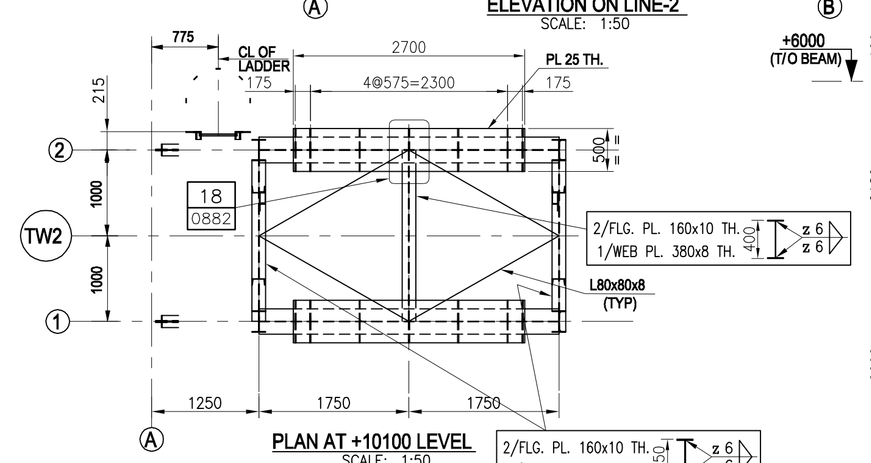

PLAN AT +10100 LEVEL
SCALE: 1:50

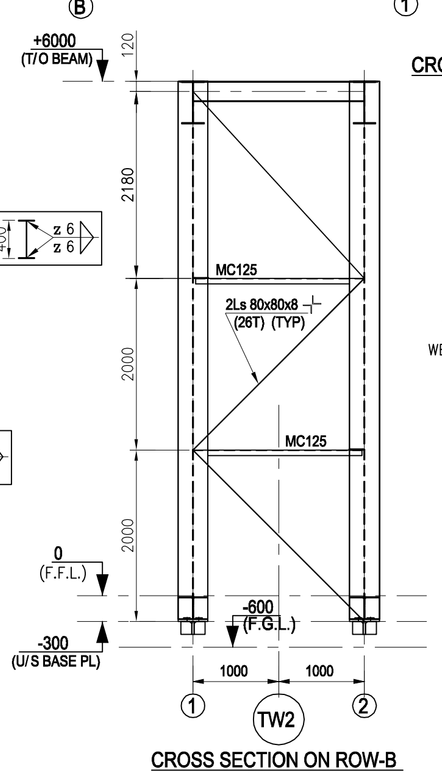

CROSS SECTION ON ROW-B
SCALE: 1:50

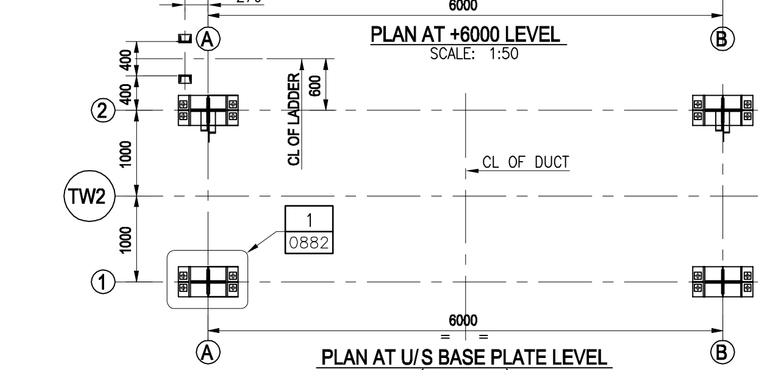

PLAN AT U/S BASE PLATE LEVEL
(SCALE 1:50)

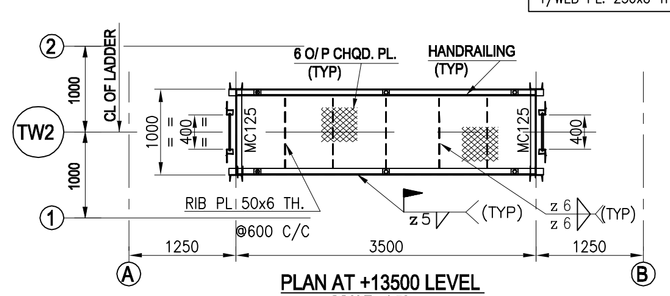

PLAN AT +13500 LEVEL
SCALE: 1:50

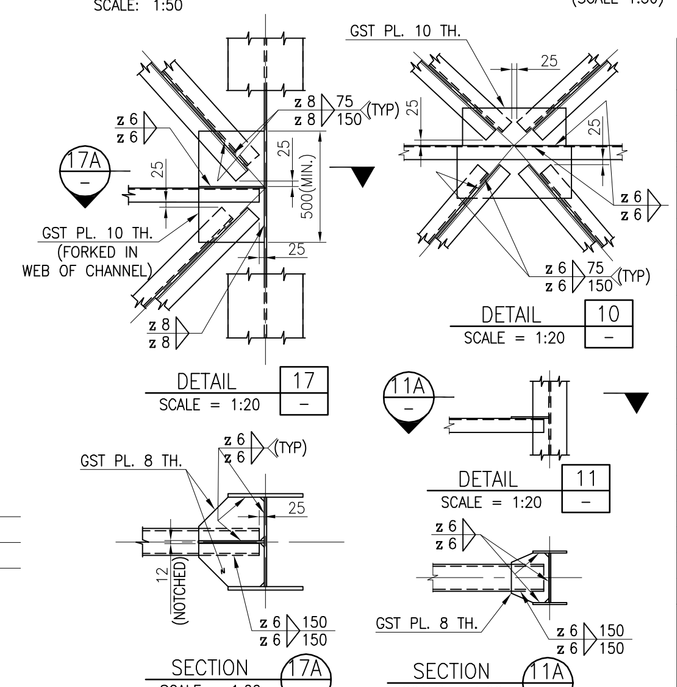

DETAIL 17 –
SCALE = 1:20

DETAIL 10 –
SCALE = 1:20

DETAIL 11 –
SCALE = 1:20

SECTION 17A –
SCALE = 1:20

SECTION 11A –
SCALE = 1:20

SECTIONWISE WEIGHT (APPROXIMATE) FOR DRAWING NO: 28763-63A-VBD-STD-0881

TYPE	DESCRIPTION	WEIGHT(Kgs.)	SPECIFICATION	REMARKS
ANGLE	L65x65x6	190	ASTM A36	(GR-NA)
	L75x75x6	525	ASTM A36	(GR-NA)
	L80x80x8	615	ASTM A36	(GR-NA)
	L90x90x8	115	ASTM A36	(GR-NA)
PIPES	DN25	30	ASTM A53	(GR-B)
	DN32	90	ASTM A53	(GR-B)
	DN40	80	ASTM A53	(GR-B)
PLATE	PL 6	255	ASTM A36	(GR-NA)
	PL 8	900	ASTM A36	(GR-NA)
	PL 10	1974	ASTM A36	(GR-NA)
	PL 12	605	ASTM A36	(GR-NA)
	PL 16	2970	ASTM A36	(GR-NA)
	PL 25	530	ASTM A36	(GR-NA)
	PL 28	86	ASTM A36	(GR-NA)
	PL 32	935	ASTM A36	(GR-NA)
CHANNEL	C125x65	555	ASTM A36	(GR-NA)
	C150x75	680	ASTM A36	(GR-NA)
CHQD PL	CHQD PL 6	510	ASTM A36	(GR-NA)
ROUND	ROD-20 DIA	50	ASTM A36	(GR-NA)

GRAND TOTAL = 11695 Kgs.

1) THE WEIGHTS INDICATED EXCLUDE FABRICATION AND OTHER IRRECOVERABLE LOSSES
2) ADD EXTRA AS PER FIELD PRACTICE

Controlled Copy For Internal Circulation — STR

DISTRIBUTION

CUSTOMER	3	COS	
		ENV	
CONTRACTOR	3	MNB	
CVL	1	NFE	
ELE		PWR	
IAC		CNT	
LTL		INS	
STR	1	PRS	
UTL		CON	
WTS			
COB		CHN-	
CRF		CHN-	
IRM		CHN-	
MMH		MUM-	
PML		MUM-	
RLM		PM	
STM		SITE	3

No.	DATE	ZONE	REMARKS	BY	APP.	DRG. No./DETAILS

REVISION — REFERENCE DRAWINGS

NOTES

1. FOR GENERAL NOTES, REFER TO DRG. NO. 28763-000-000-STD-0051.
2. FOR STANDARD DRAWING OF HANDRAIL, REFER TO DRG. NO. 28763-000-000-STD-0054
3. FOR STANDARD DRAWING OF LADDER, REFER TO DRG. NO. 28763-000-000-STD-0058.
4. F.G.L. CORRESPONDS TO RL +6.5M.
5. F.F.L. CORRESPONDS TO RL +7.1M.
6. READ THIS DRAWING IN CONJUNCTION WITH DRAWING NO. 28763-63A-VBD-STD-0882.

APPROVAL

APPROVED FOR CONSTRUCTION
SIGNATURE:
DATE: 31/10/2017
M.N.DASTUR AND COMPANY (P) LTD. KOLKATA

REV	DEPT	BY	DATE
UTL	UTL		31.10.17
LTL	LTL		30.10.17

This drawing is the property of M. N. DASTUR & COMPANY (P) LTD and is issued for the specific project mentioned herein. This is not to be copied or used for other projects unless expressly permitted by M. N. DASTUR & COMPANY (P) LTD

DASTUR
M. N. DASTUR & COMPANY (P) LTD
CONSULTING ENGINEERS, KOLKATA

SCALE	1:50	DATE
DSGND. BY		20.10.2017
DRAWN BY	AMS	20.10.2017
CHKD. BY		31.10.2017
APPVD. BY		31.10.2017

FOR GPH ISPAT LIMITED
CHITTAGONG,BANGLADESH

GPH DRG. No.

INSTALLATION OF 0.8 MTPY INTEGRATED STEEL PLANT PROJECT
G.A. AND DETAIL OF TOWER MKD TW2

JOB No. 28763 | DRG. No. 28763-63A-VBD-STD-0881 | REV. 0