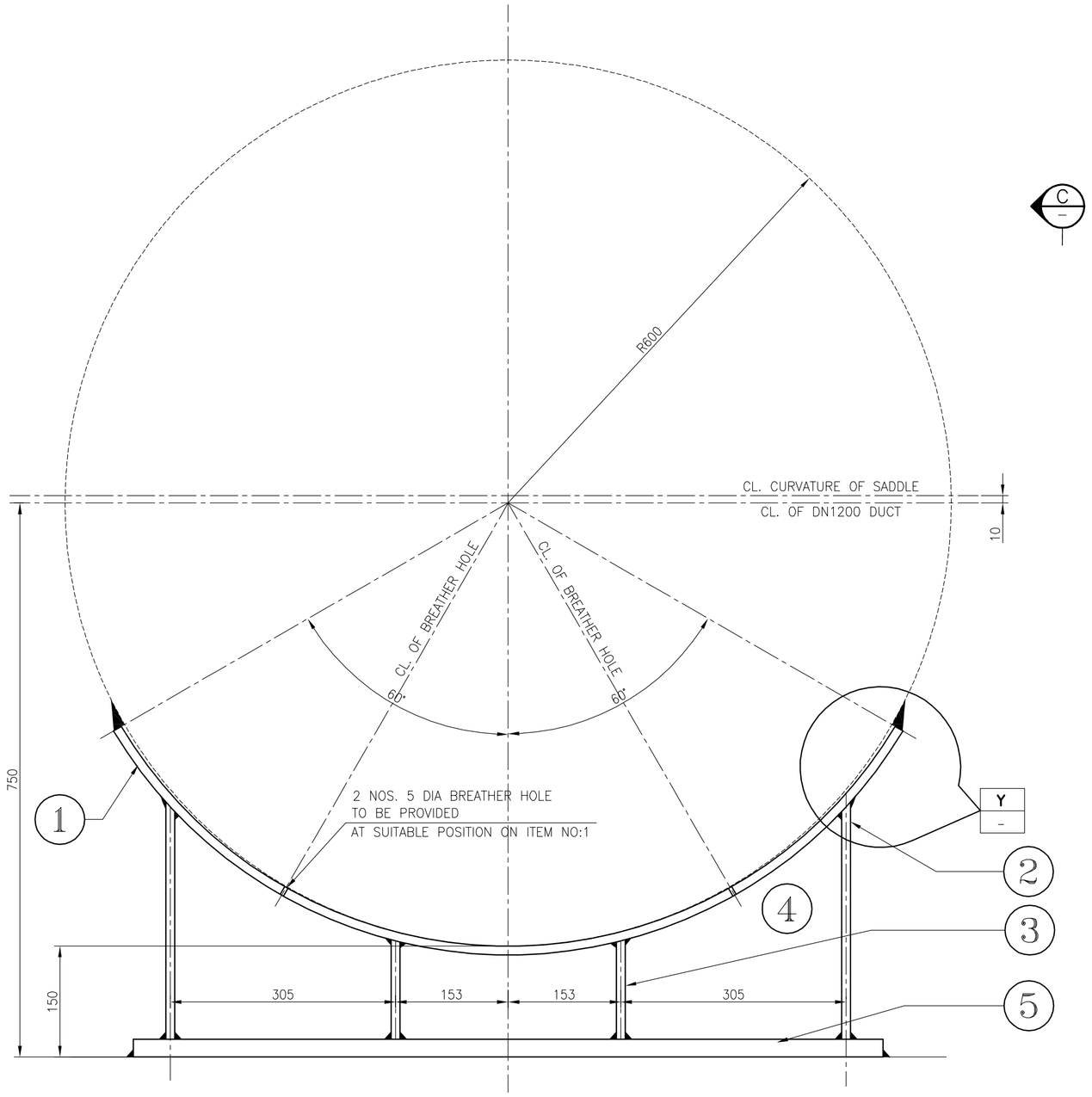

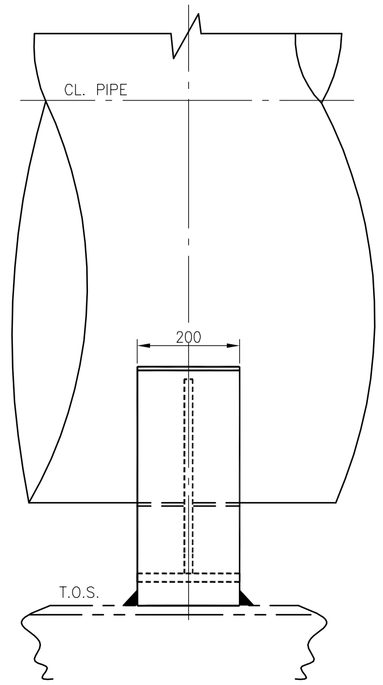

SECTION C
SCALE = 1:1

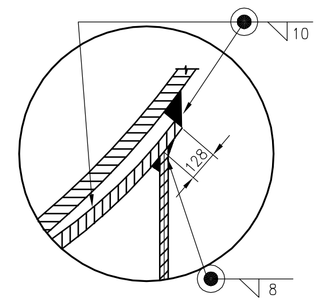

DETAIL Y
1:1

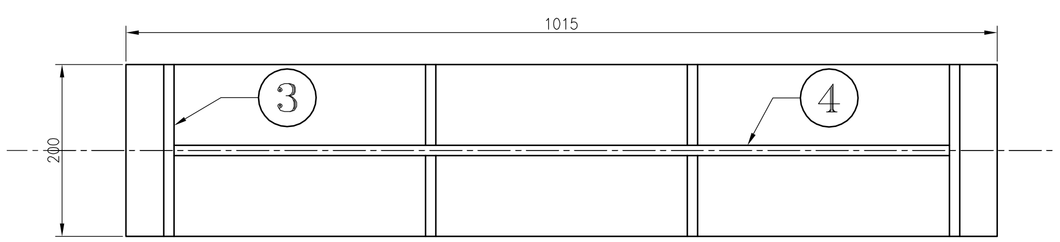

SECTION A
SCALE = 1:1

	SUPPT. PT	TYP. OF SUPPT	TOS
	S7	FIXED	+8650
	S11	FIXED	+8650
QTY.: 03 NOS.	S15	FIXED	+8650

EREC. MARK	SL. NO.	ITEM NO.	DESCRIPTION	UNIT WT.OF MATERIAL	UNIT WT./PC KGS.	QTY. OF ITEM	TOTAL WT. (KGS)	SPECIFICATION & GRADE	WT. OF EREC. MARK
FIXED SUPPORT FOR DN1200 DUCT		5	PL 1015x200x24thk	–	38.25	1	38.25	ASTM A36	38.25
		4	PL 905x308x12thk	–	26.3	1	26.3	ASTM A36	26.3
		3	PL 135x96x12thk	–	1.22	4	4.88	ASTM A36	5.2
		2	PL 321x200x12thk	–	6.05	2	12.1	ASTM A36	11.76
		1	PL 1286x200x12thk	–	24.23	1	24.23	ASTM A36	24.23

Controlled Copy For Internal Circulation | UTL

DISTRIBUTION

CUSTOMER		COS	
		ENV	
CONTRACTOR		MNB	
CVL		NFE	
ELE		PWR	
IAC		CNT	
LTL		INS	
STR		PRS	
UTL		CON	
WTS			
COB		CHN–	
CRF		CHN–	
IRM		CHN–	
MMH		MUM–	
PML		MUM–	
RLM		PM	
STM		SITE	

No.	DATE	ZONE	REMARKS	BY	APP.	DRG. No./DETAILS

REVISION | REFERENCE DRAWINGS

NOTES

1) ALL DIMENSIONS ARE IN MM.
2) FOR SUPPORT MARKING REF LAYOUT DRG. NO. 28763-63A-VBD-UTL-0071.

APPROVAL

APPROVED FOR CONSTRUCTION
SIGNATURE:
DATE: 31/10/2017
M.N.DASTUR AND COMPANY (P) LTD. KOLKATA

REV	DEPT	BY	DATE

This drawing is the property of M. N. DASTUR & COMPANY (P) LTD and is issued for the specific project mentioned herein. This is not to be copied or used for other projects unless expressly permitted by M. N. DASTUR & COMPANY (P) LTD

DASTUR
M. N. DASTUR & COMPANY (P) LTD
CONSULTING ENGINEERS, KOLKATA

SCALE	1:1	DATE	FOR GPH ISPAT LIMITED CHITTAGONG,BANGLADESH
DSGND. BY		30.10.2017	
DRAWN BY	MNGA	30.10.2017	GPH DRG. No.
CHKD. BY		31.10.2017	INSTALLATION OF 0.8 MTPY INTEGRATED STEEL PLANT PROJECT FIXED SADDLE SUPPORT FOR LADLE AND TUNDISH WREAKING FES DUCT
APPVD. BY		31.10.2017	

JOB No. 28763 | DRG. No. 28763-63A-VBD-UTL-0084 | REV. 0