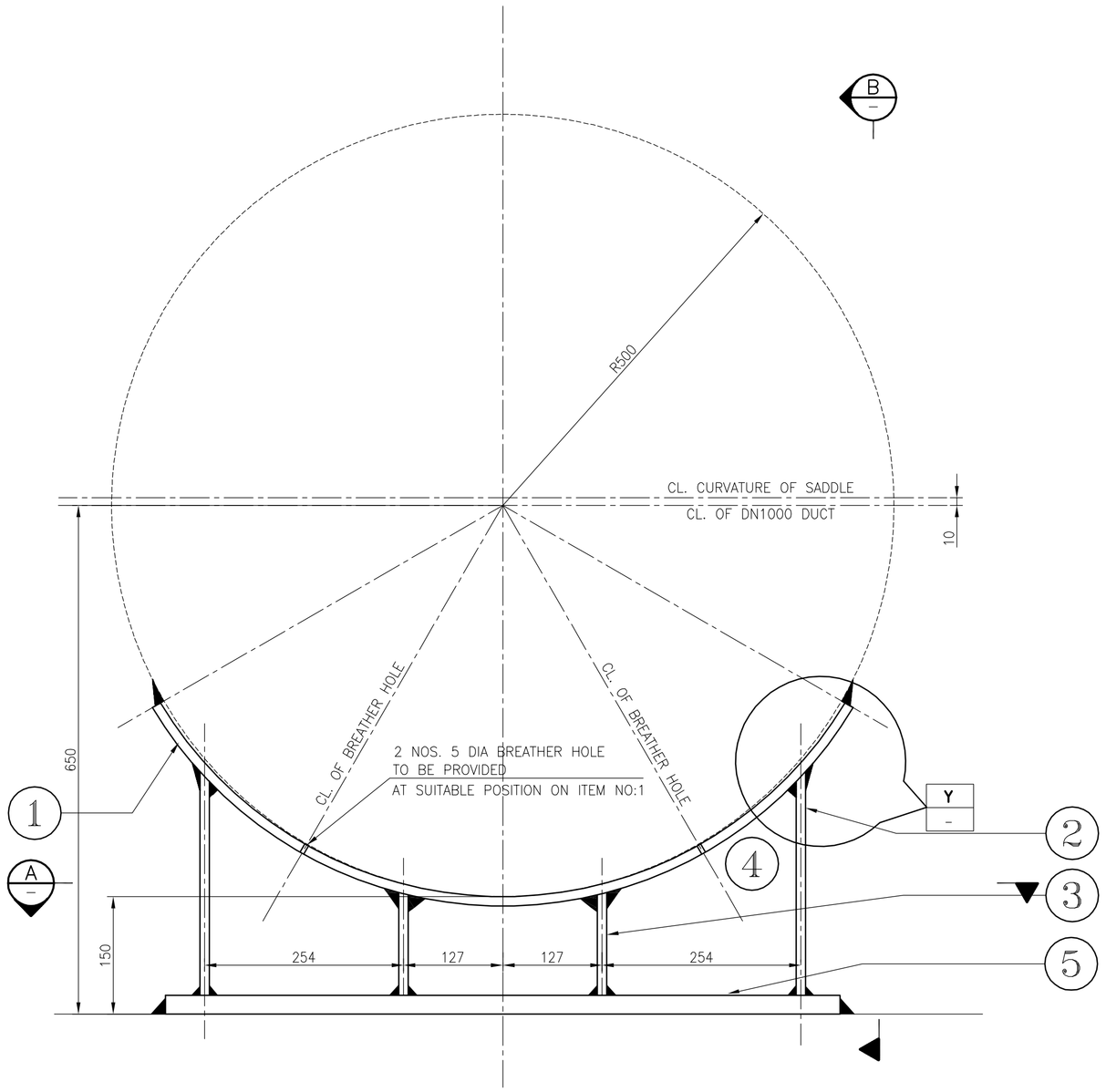

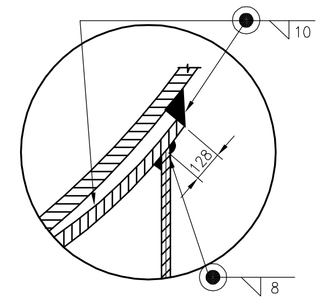

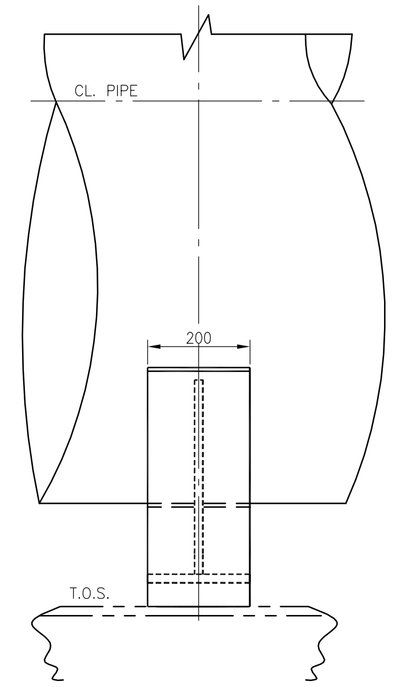

SECTION B
SCALE = 1:1

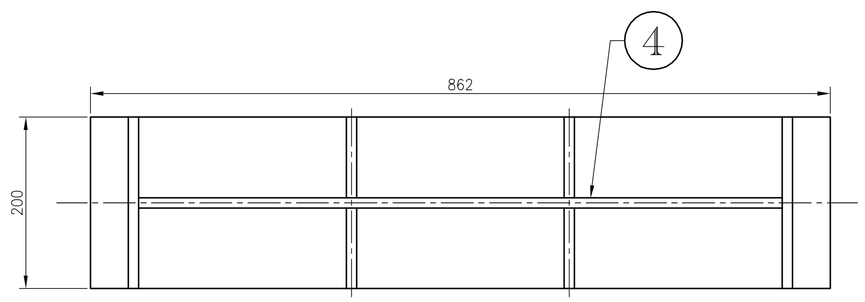

SECTION A
SCALE = 1:5

FIXED SUPPORT DETAILS FOR LF FUME EXTRACTION DUCT		
SUPPT. PT	TOS	TYP. OF SUPPT
S5	+13250	FIXED

ROUND FIXED SUP. 01 NO.

EREC. MARK	SL. NO.	ITEM NO.	DESCRIPTION	UNIT WT.OF MATERIAL	UNIT WT./PC KGS.	QTY. OF ITEM	TOTAL WT. (KGS)	SPECIFICATION & GRADE	WT. OF EREC. MARK
FREE SUPPORT FOR DN1000 DUCT		5	PL 862x200x24thk	–	32.5	1	32.5	ASTM A36	32.5
		4	PL 750x273x12thk	–	19.2	1	19.2	ASTM A36	19.2
		3	PL 131x96x12thk	–	1.2	4	4.8	ASTM A36	4.4
		2	PL 286x200x12thk	–	5.4	2	10.8	ASTM A36	10.4
		1	PL 1076x200x12thk	–	20.3	1	20.3	ASTM A36	20.3

Controlled Copy For Internal Circulation | UTL

DISTRIBUTION

CUSTOMER		COS	
		ENV	
CONTRACTOR		MNB	
CVL		NFE	
ELE		PWR	
IAC		CNT	
LTL		INS	
STR		PRS	
UTL		CON	
WTS			
COB		CHN–	
CRF		CHN–	
IRM		CHN–	
MMH		MUM–	
PML		MUM–	
RLM		PM	
STM		SITE	

No.	DATE	ZONE	REMARKS	BY	APP.	DRG. No./DETAILS

REVISION — REFERENCE DRAWINGS

NOTE:
1) ALL DIMENSIONS ARE IN MM.
2) FOR SUPPORT MARKING REF LAYOUT DRG. NO. 28763-63A-VBD-UTL-0069.

N O T E S

A P P R O V A L

APPROVED FOR CONSTRUCTION
SIGNATURE:
DATE: 31/10/2017
M.N.DASTUR AND COMPANY (P) LTD. KOLKATA

REV	DEPT	BY	DATE

This drawing is the property of M. N. DASTUR & COMPANY (P) LTD and is issued for the specific project mentioned herein. This is not to be copied or used for other projects unless expressly permitted by M. N. DASTUR & COMPANY (P) LTD

DASTUR
M. N. DASTUR & COMPANY (P) LTD
CONSULTING ENGINEERS, KOLKATA

SCALE	-	DATE
DSGND. BY		30.10.2017
DRAWN BY	MNGA	30.10.2017
CHKD. BY		31.10.2017
APPVD. BY		31.10.2017

FOR GPH ISPAT LIMITED
CHITTAGONG,BANGLADESH

GPH DRG. No.
INSTALLATION OF 0.8 MTPY INTEGRATED STEEL PLANT PROJECT
FIXED SADDLE SUPPORT FOR LADLE FURNACE FES DUCT

JOB No. 28763 | DRG. No. 28763-63A-VBD-UTL-0081 | REV. 0