DAC Results

Testbench to test the DAC

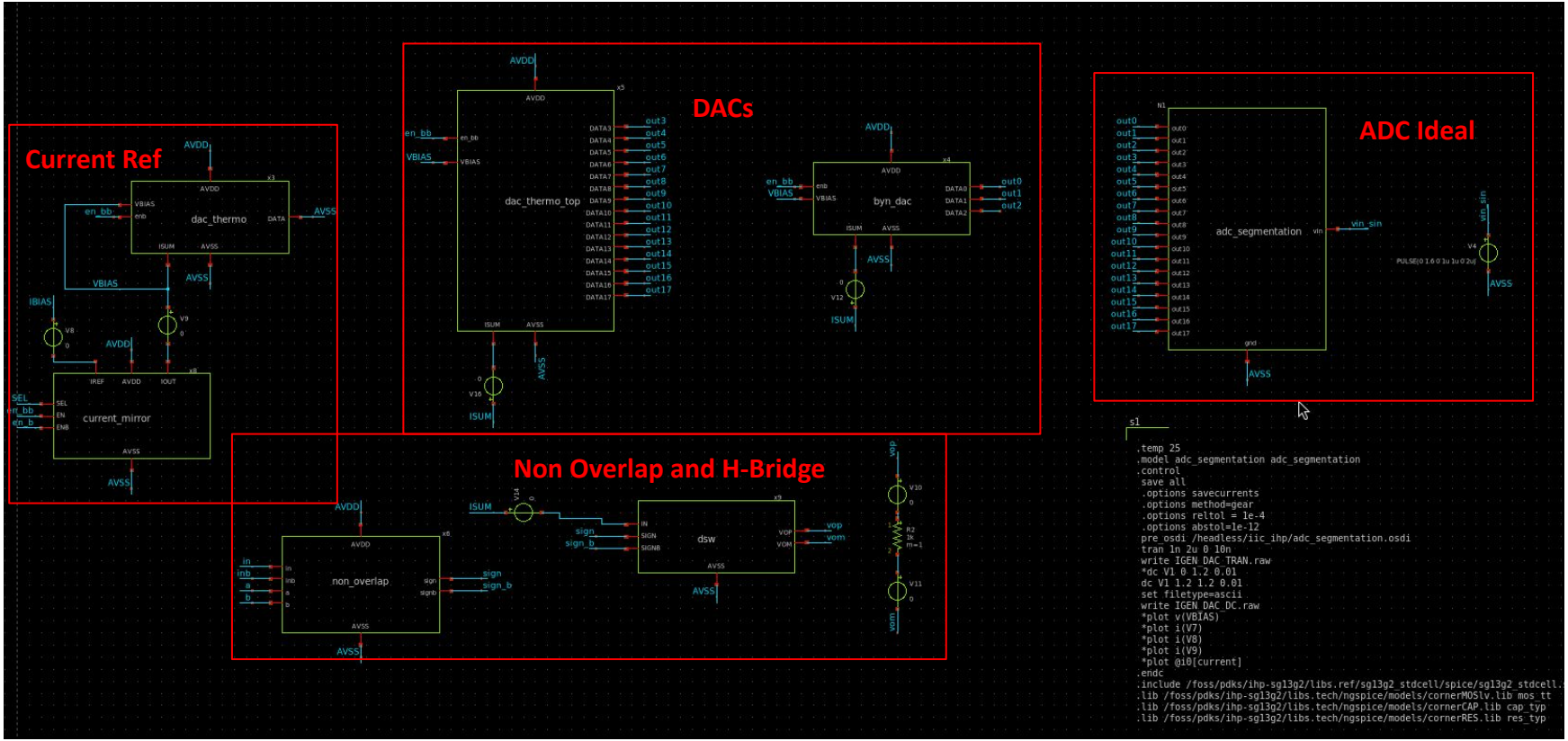

Current Mirror block

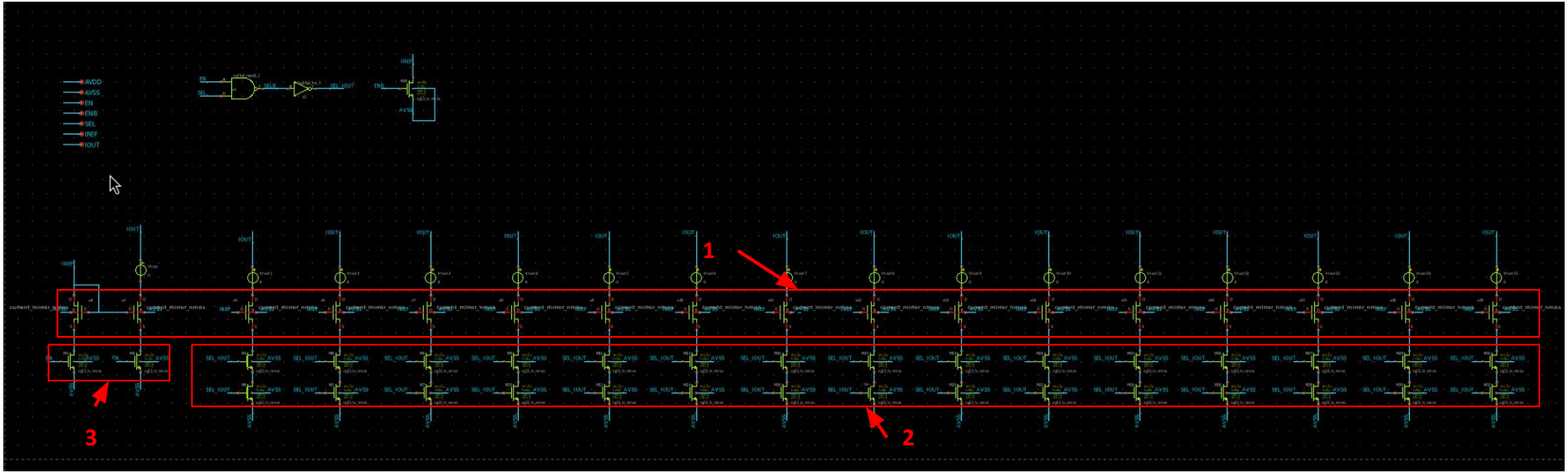

Current Mirror block

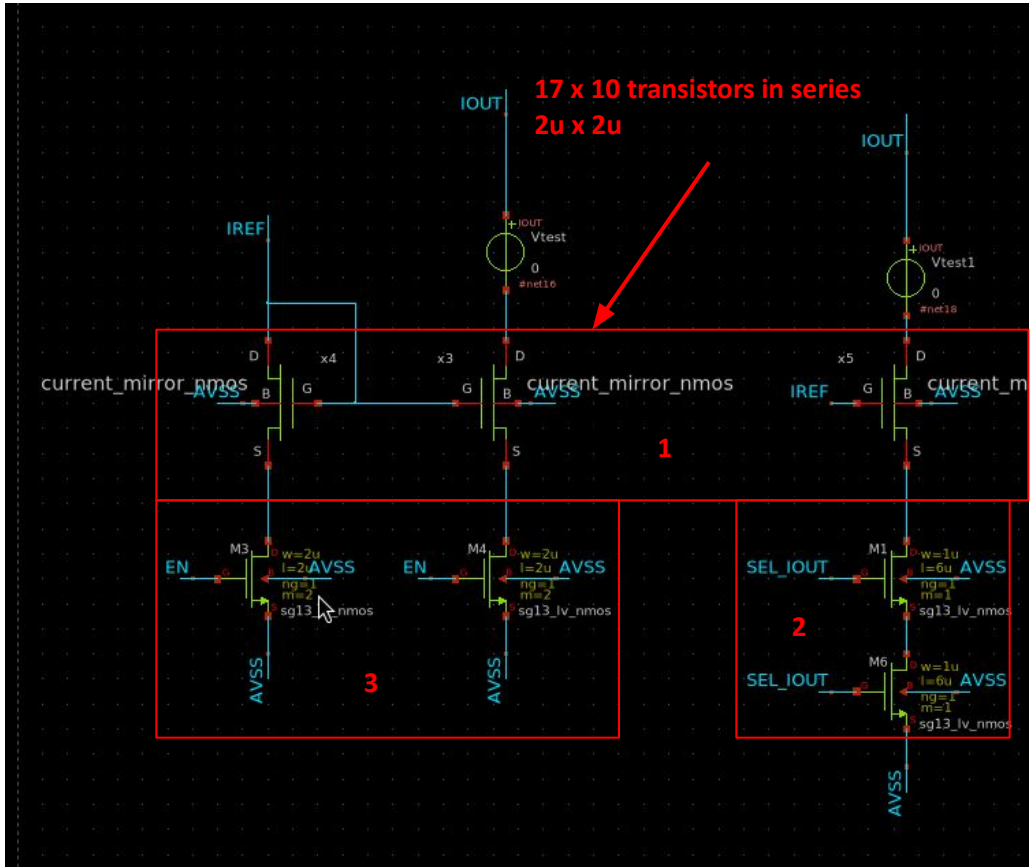

DAC THERMO

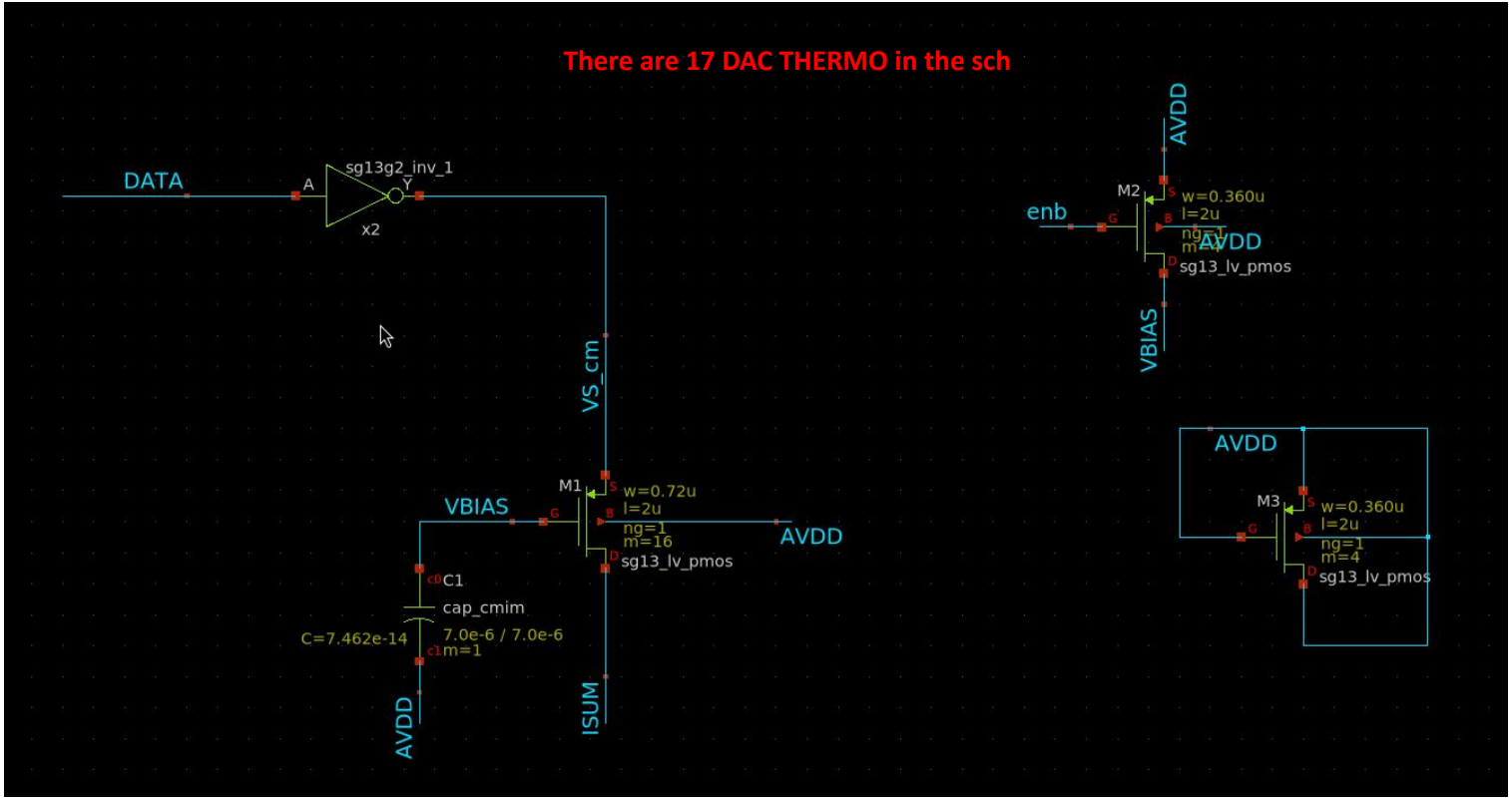
There are 17 DAC THERMO in the sch
DATA
A
sg13g2_inv_1
Y
x2
VS_cm
M1
w=0.72u
l=2u
ng=1
m=16
sg13_lv_pmos
VBIAS
AVDD
C1
cap_cmim
C=7.462e-14
7.0e-6 / 7.0e-6
m=1
AVDD
ISUM
AVDD
M2
w=0.360u
l=2u
ng=1
m=4
enb
AVDD
sg13_lv_pmos
VBIAS
AVDD
M3
w=0.360u
l=2u
ng=1
m=4
sg13_lv_pmos

DAC Binary

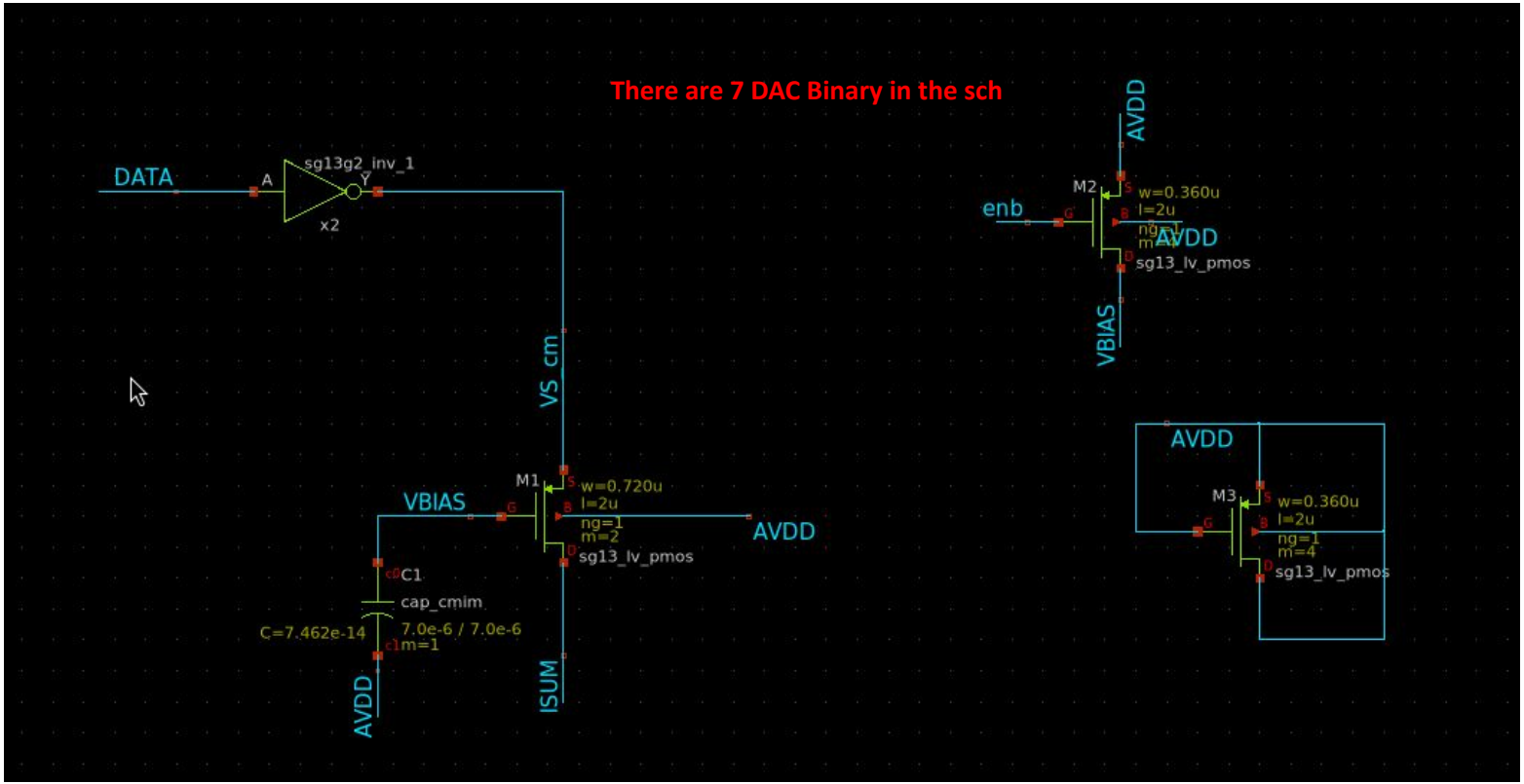
There are 7 DAC Binary in the sch
DATA
A
sg13g2_inv_1
Y
x2
VS cm
M1
w=0.720u
l=2u
ng=1
m=2
sg13_lv_pmos
VBIAS
AVDD
C1
cap_cmim
C=7.462e-14
7.0e-6 / 7.0e-6
m=1
AVDD
ISUM
AVDD
M2
w=0.360u
l=2u
ng=1
m=4
sg13_lv_pmos
enb
AVDD
VBIAS
AVDD
M3
w=0.360u
l=2u
ng=1
m=4
sg13_lv_pmos

Non-Overlap circuit

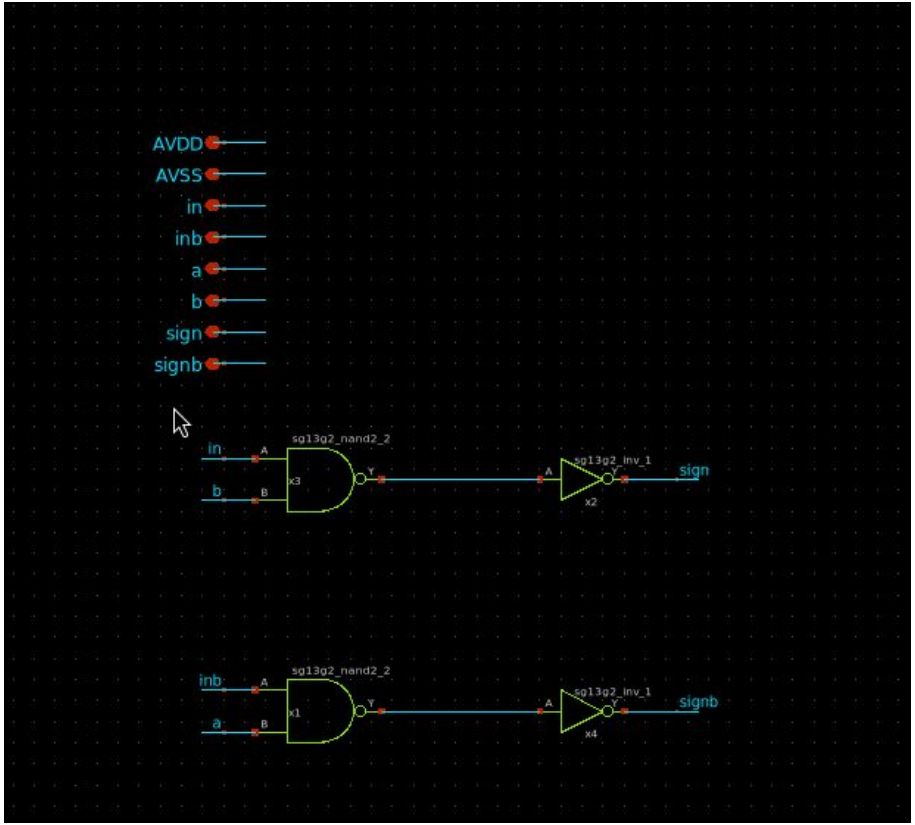

H-Bridge circuit

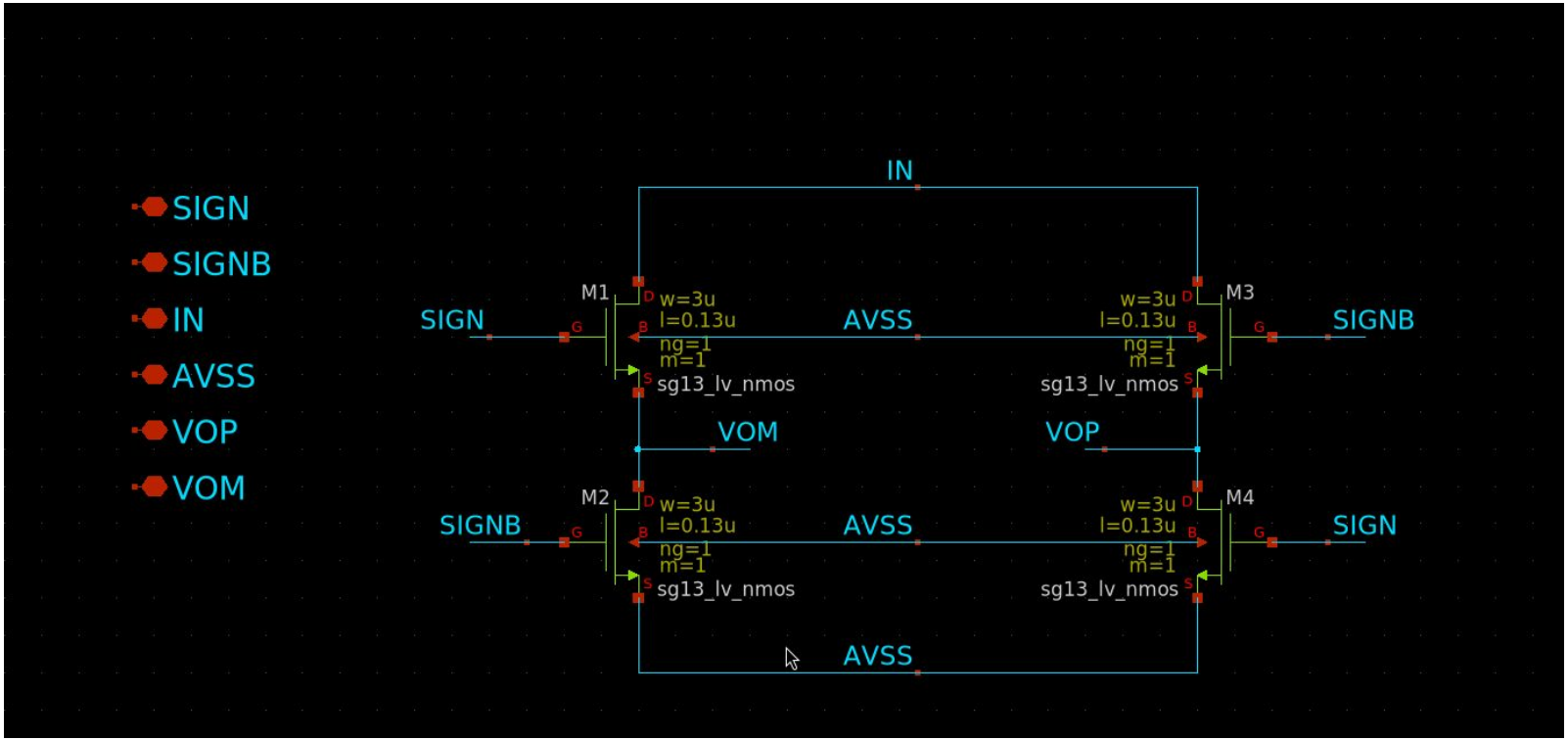

DC Simulation

BINARY DAC | SEL = 0

DATA2	DATA1	DATA0	Expected Value	Measured Value	Unit
0	0	0	175n	187.3n	A
0	0	1	150n	160.5n	
0	1	0	125n	133.8n	
0	1	1	100n	107n	
1	0	0	75n	80.2n	
1	0	1	50n	53.5n	
1	1	0	25n	26.7n	
1	1	1	0	4p	

DC Simulation

BINARY DAC | SEL = 1

DATA2	DATA1	DATA0	Expected Value	Measured Value	Unit
0	0	0	2.8u	2.97u	A
0	0	1	2.4u	2.55u	
0	1	0	2u	2.12u	
0	1	1	1.6u	1.7u	
1	0	0	1.2u	1.27u	
1	0	1	0.8u	0.85u	
1	1	0	0.4u	0.425u	
1	1	1	0	6p	

DC Simulation

THERMOMETRIC DAC | SEL = 0

DATA	Expected Value	Measured Value	Unit
000000000000000	3u	3.17u	A
000000000000001	2.8u	2.96u	
000000000000011	2.6u	2.75u	
000000000000111	2.4u	2.5u	
000000000001111	2.2u	2.3u	
000000000011111	2u	2.1u	
000000000111111	1.8u	1.9u	
000000001111111	1.6u	1.69u	
000000011111111	1.4u	1.48u	

DC Simulation

THERMOMETRIC DAC | SEL = 0

DATA	Expected Value	Measured Value	Unit
000000111111111	1.2u	1.27u	A
000001111111111	1u	1.05u	
0000111111111111	0.8u	0.847u	
0001111111111111	0.6u	0.635u	
0011111111111111	0.4u	0.424u	
0111111111111111	0.2u	0.212u	
1111111111111111	0	81p	

DC Simulation

THERMOMETRIC DAC | SEL = 1

DATA	Expected Value	Measured Value	Unit
000000000000000	48u	47u	A
000000000000001	44.8u	43.8u	
000000000000011	41.6u	40.7u	
000000000000111	38.4u	37.6u	
000000000001111	35.2u	34.4u	
000000000011111	32u	31.3u	
000000000111111	28.8u	28.2u	
000000001111111	25.6u	25u	
000000011111111	22.4u	21.95u	

DC Simulation

THERMOMETRIC DAC | SEL = 1

DATA	Expected Value	Measured Value	Unit
000000111111111	19.2u	18.8u	A
000001111111111	16u	15.7u	
0000111111111111	12.8u	12.55u	
0001111111111111	9.6u	9.41u	
0011111111111111	6.4u	6.28u	
0111111111111111	3.2u	3.14u	
1111111111111111	0	29p	

TRAN Simulation

frequency = 1MHz | ISUM(expected) = 3uA | SEL = 0

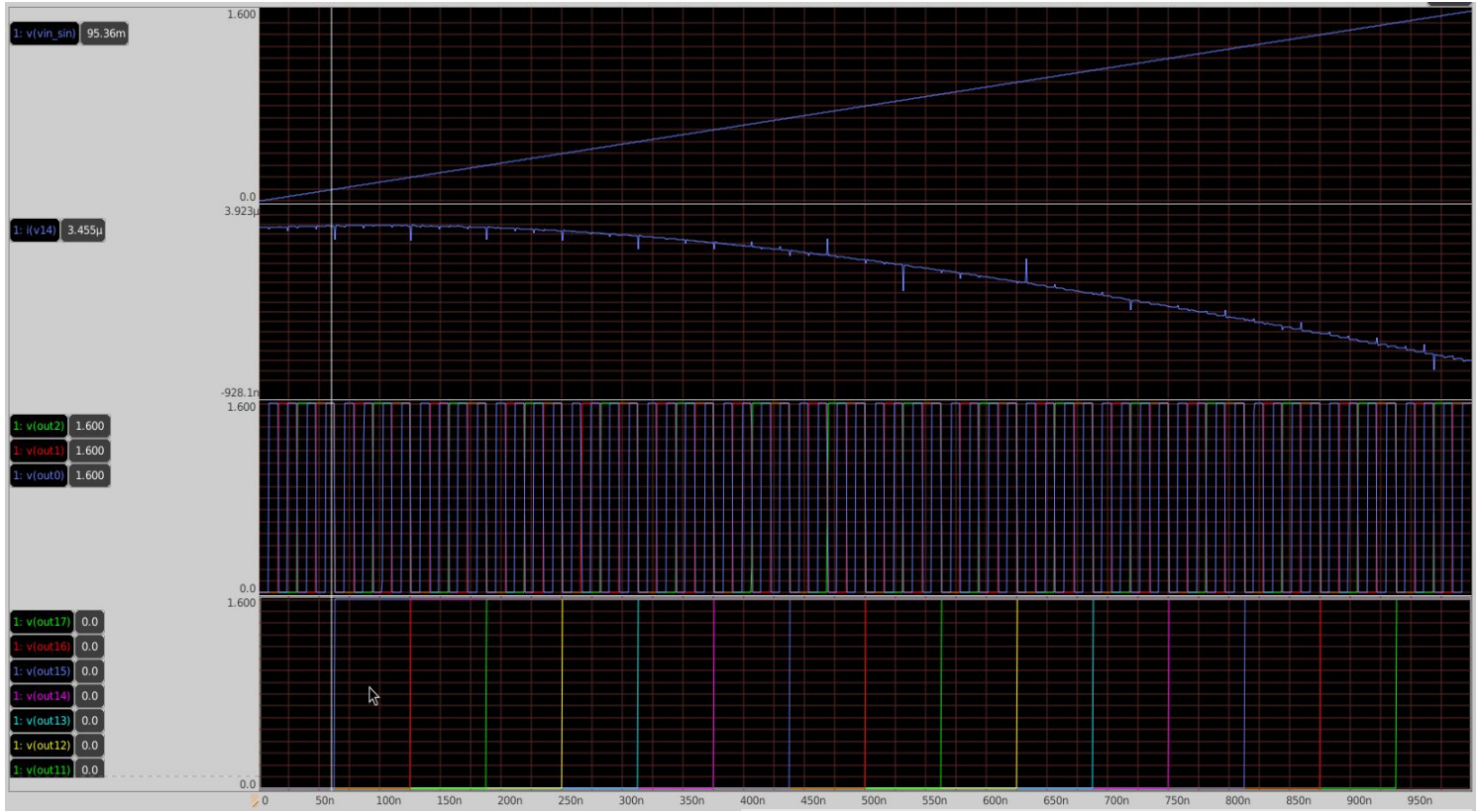

TRAN Simulation

frequency = 1MHz | ISUM(expected) = 2.8uA | SEL = 0

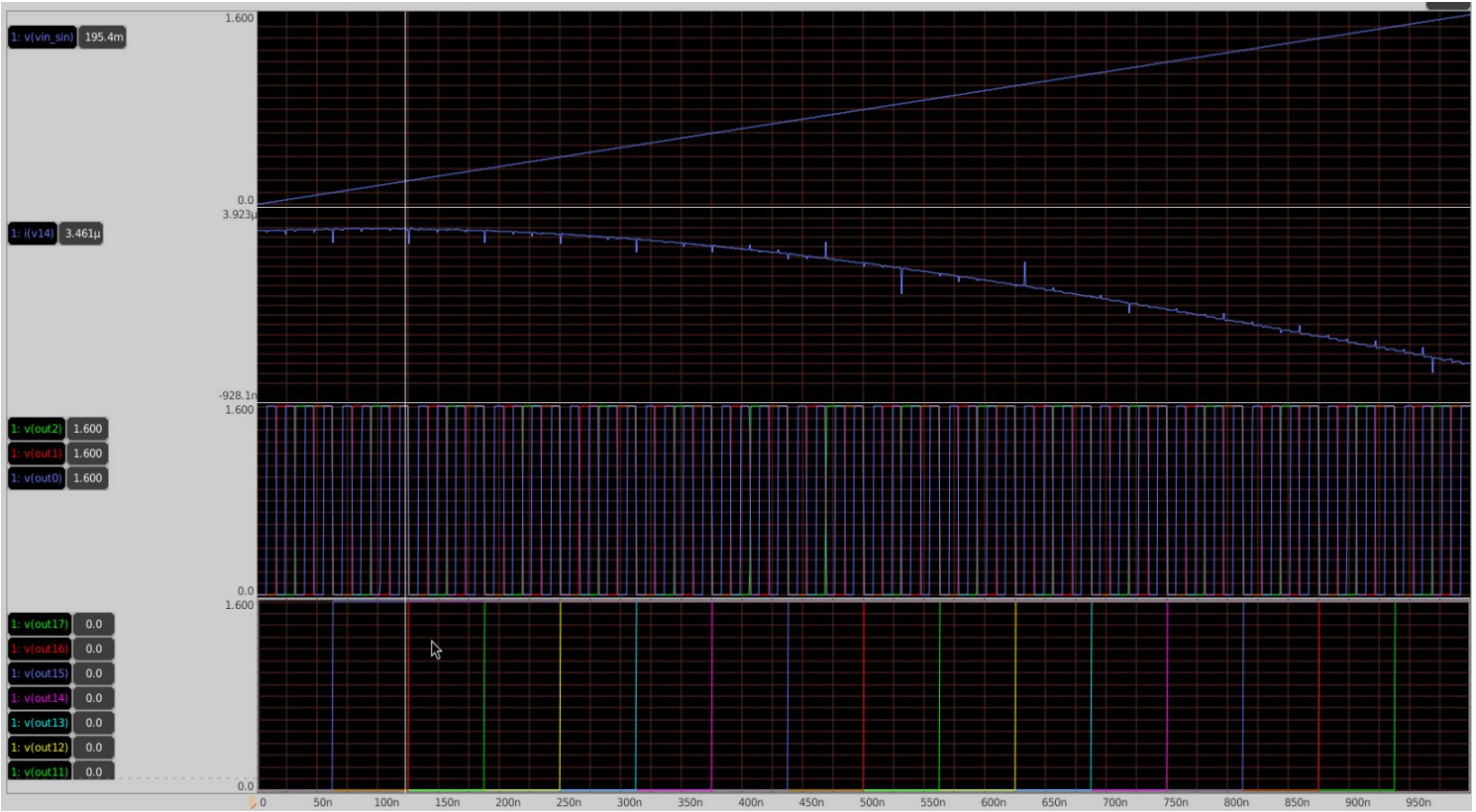

TRAN Simulation

frequency = 1MHz | ISUM(expected) = 1.8uA | SEL = 0

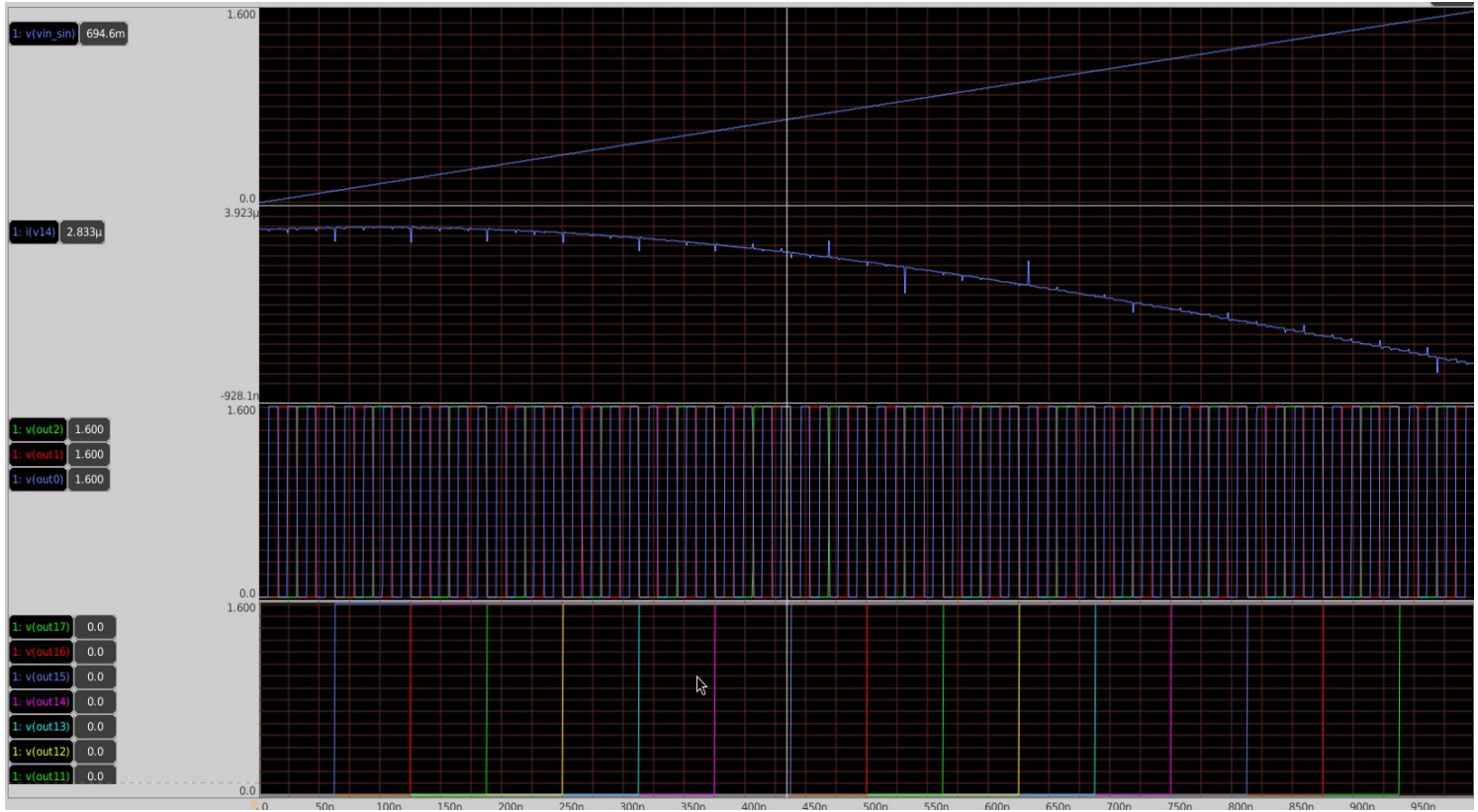

TRAN Simulation

frequency = 100kHz | ISUM(expected) = 3uA | SEL = 0

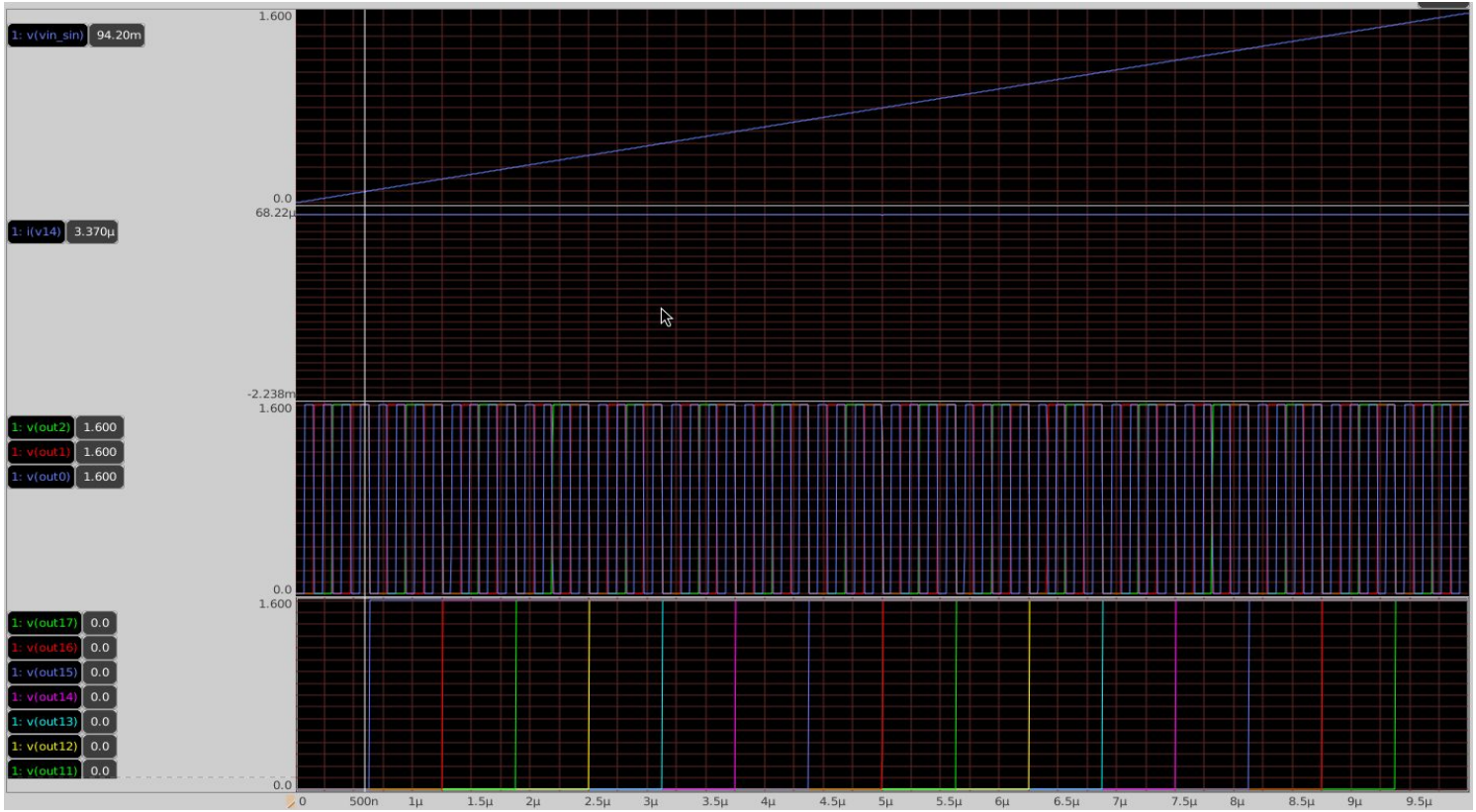

TRAN Simulation

frequency = 100kHz | ISUM(expected) = 2.8uA | SEL = 0

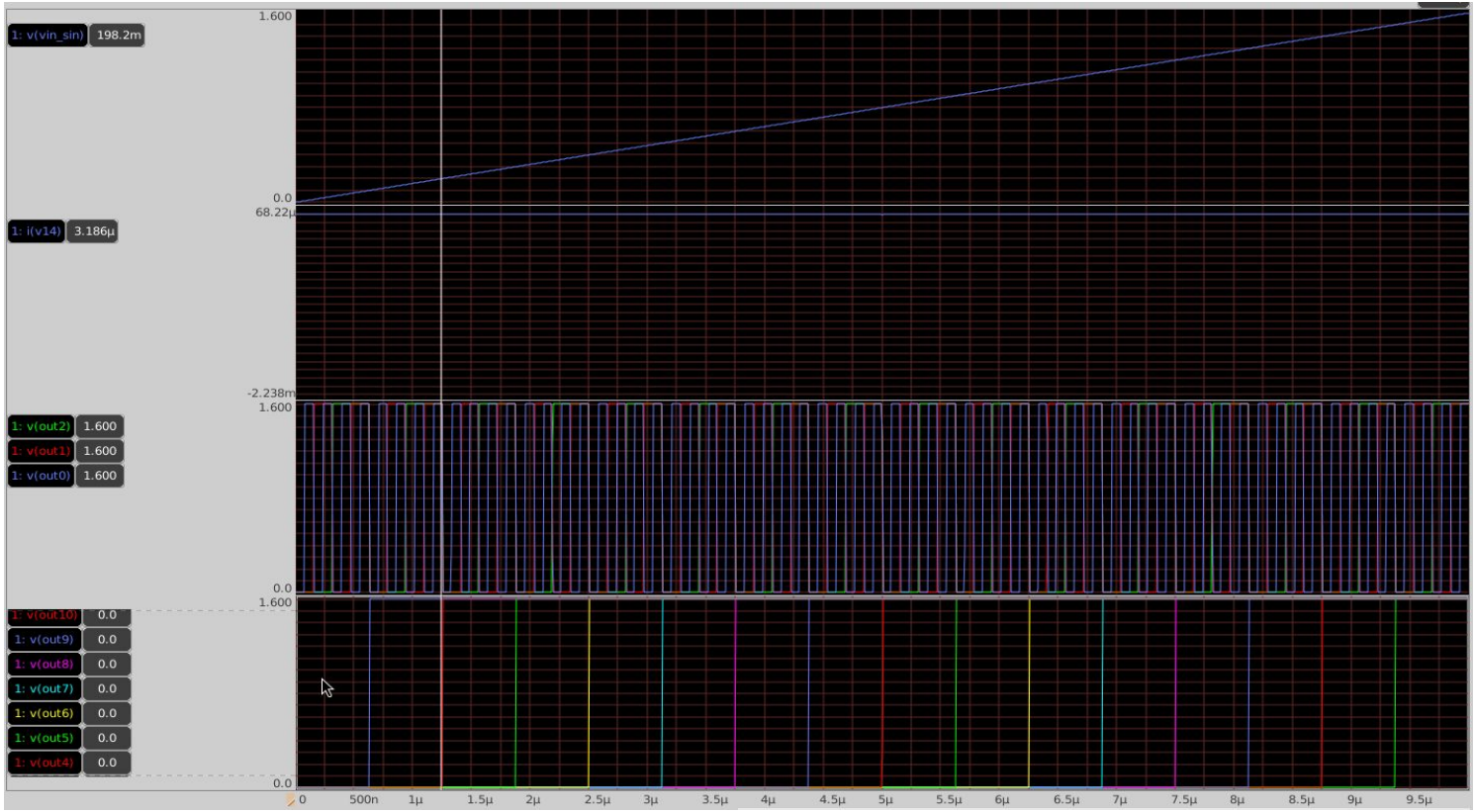

TRAN Simulation

frequency = 100kHz | ISUM(expected) = 1.8uA | SEL = 0

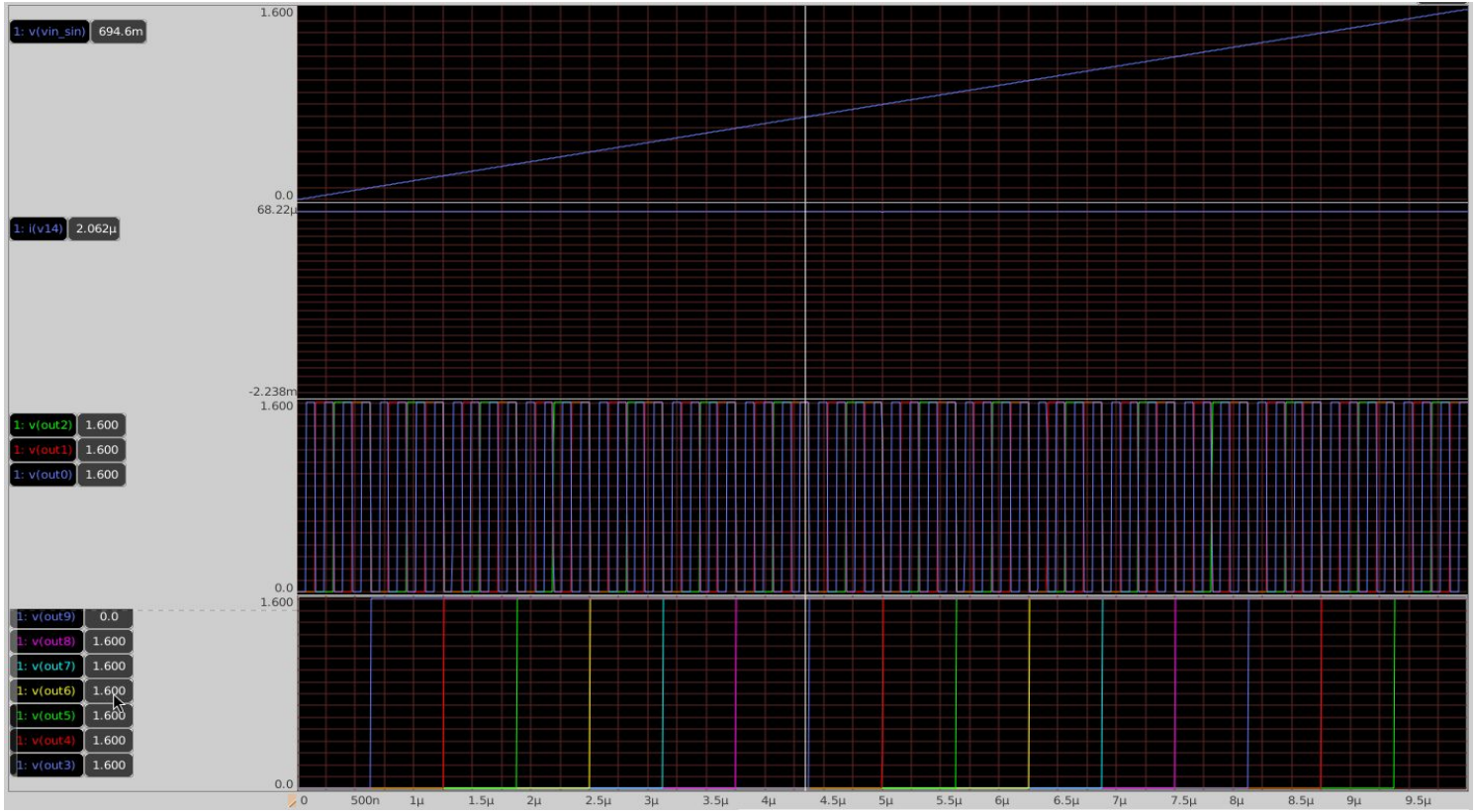

TRAN Simulation

frequency = 1MHz |ISUM(expected) = 48uA | SEL = 1

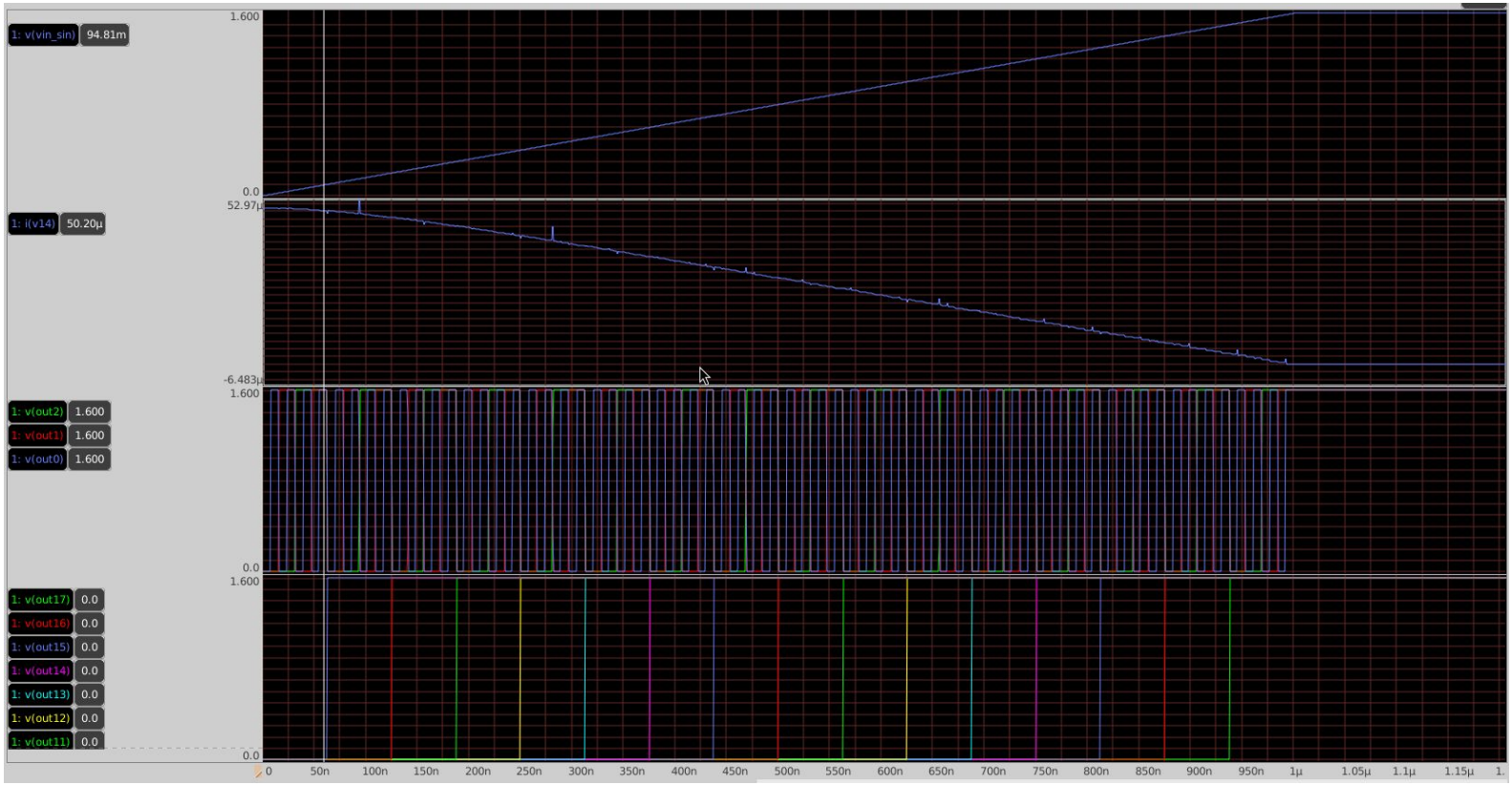

TRAN Simulation

frequency = 1MHz |ISUM(expected) = 41.6uA | SEL = 1

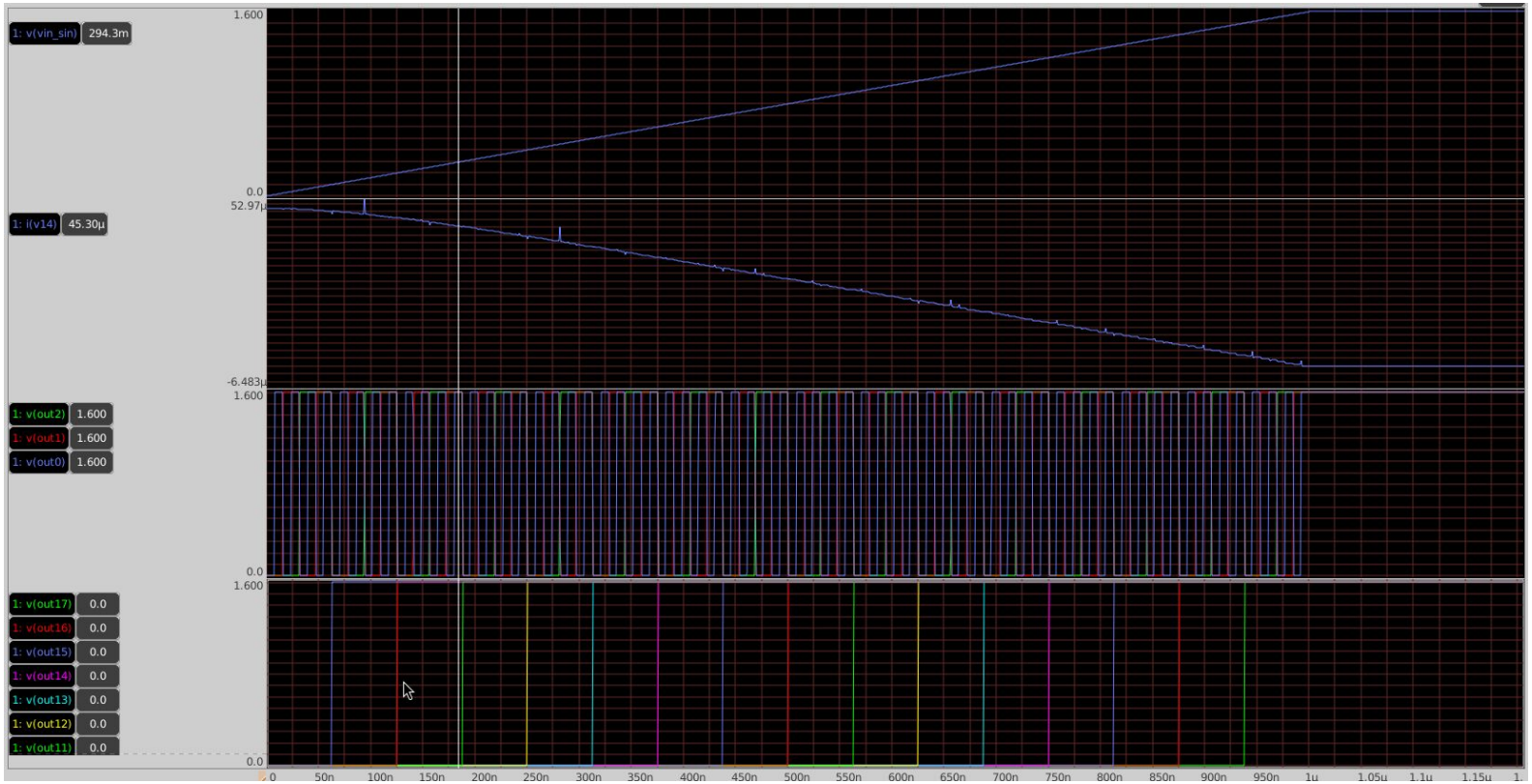

TRAN Simulation

frequency = 100kHz |ISUM(expected) = 48uA | SEL = 1

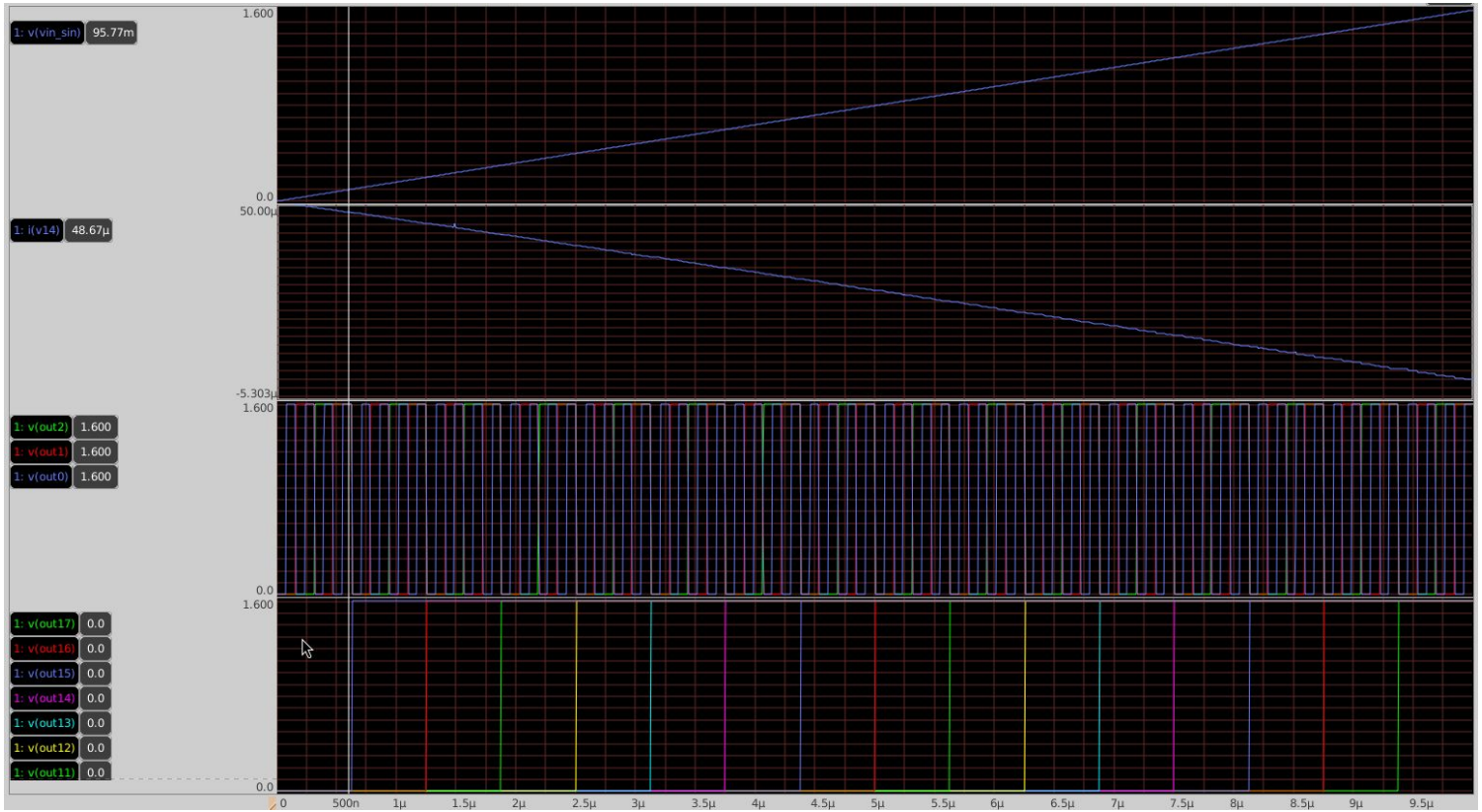

TRAN Simulation

frequency = 100kHz | ISUM(expected) = 44.8uA | SEL = 1

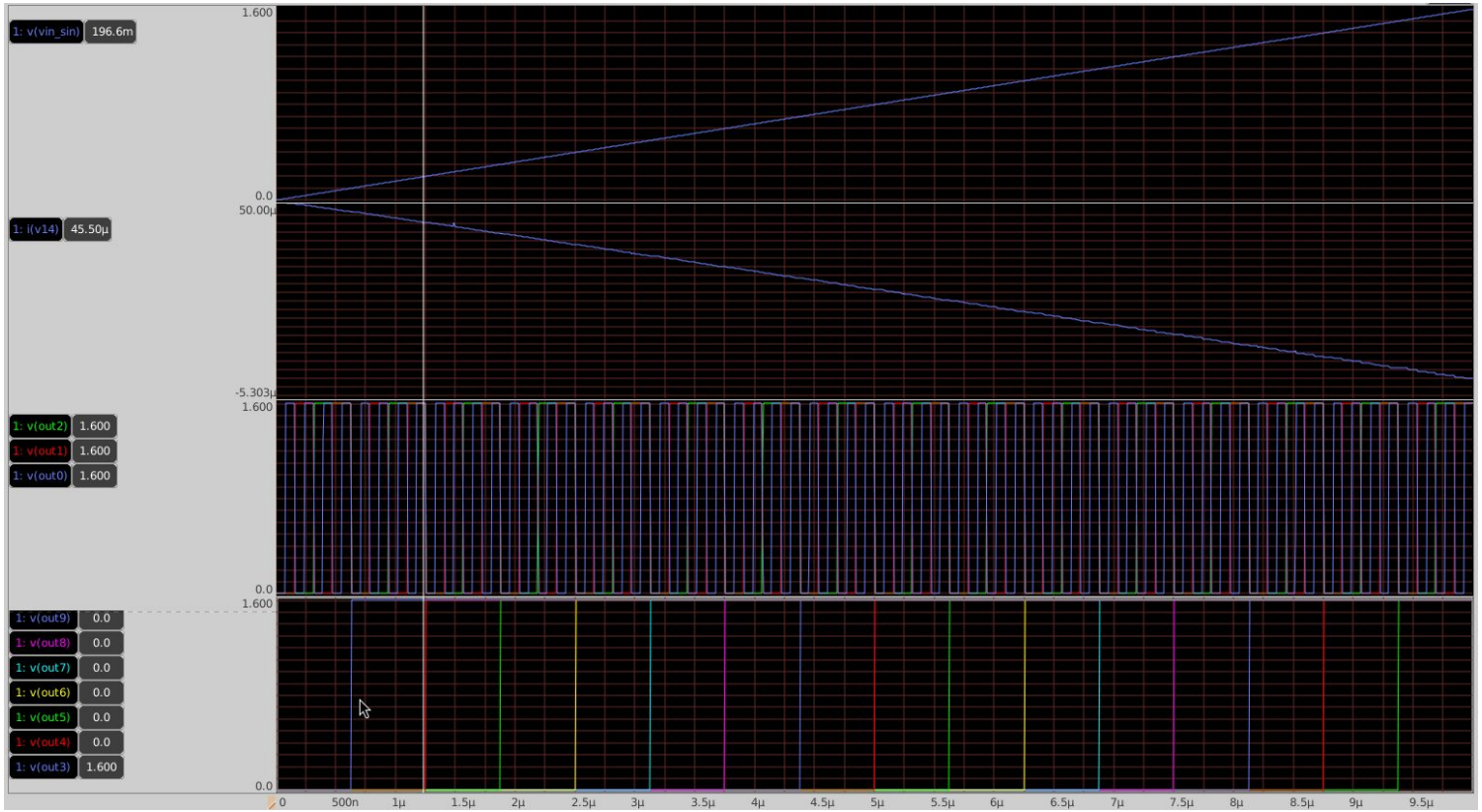

TRAN Simulation

frequency = 100kHz | ISUM(expected) = 28.8uA | SEL = 1

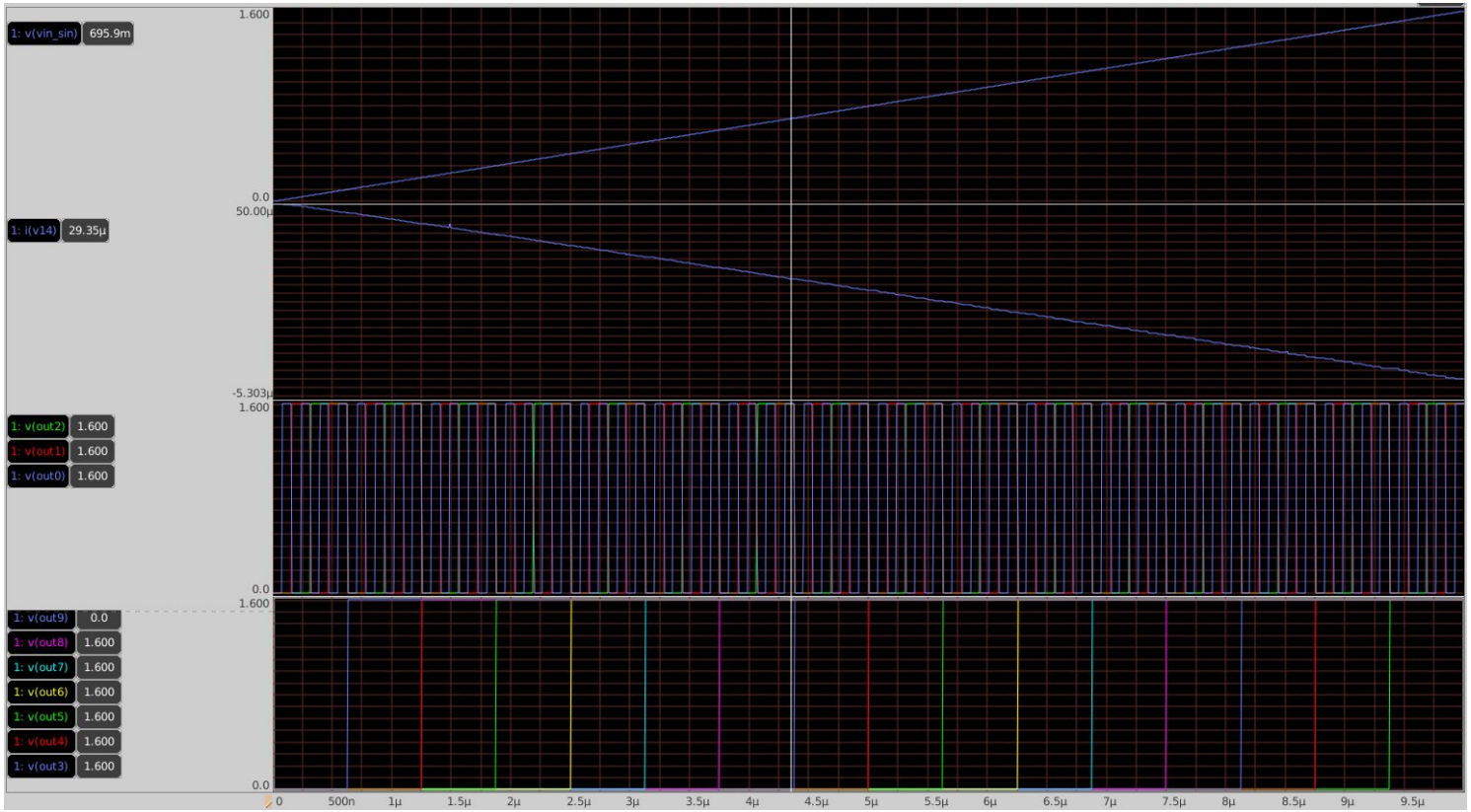

TRAN Simulation
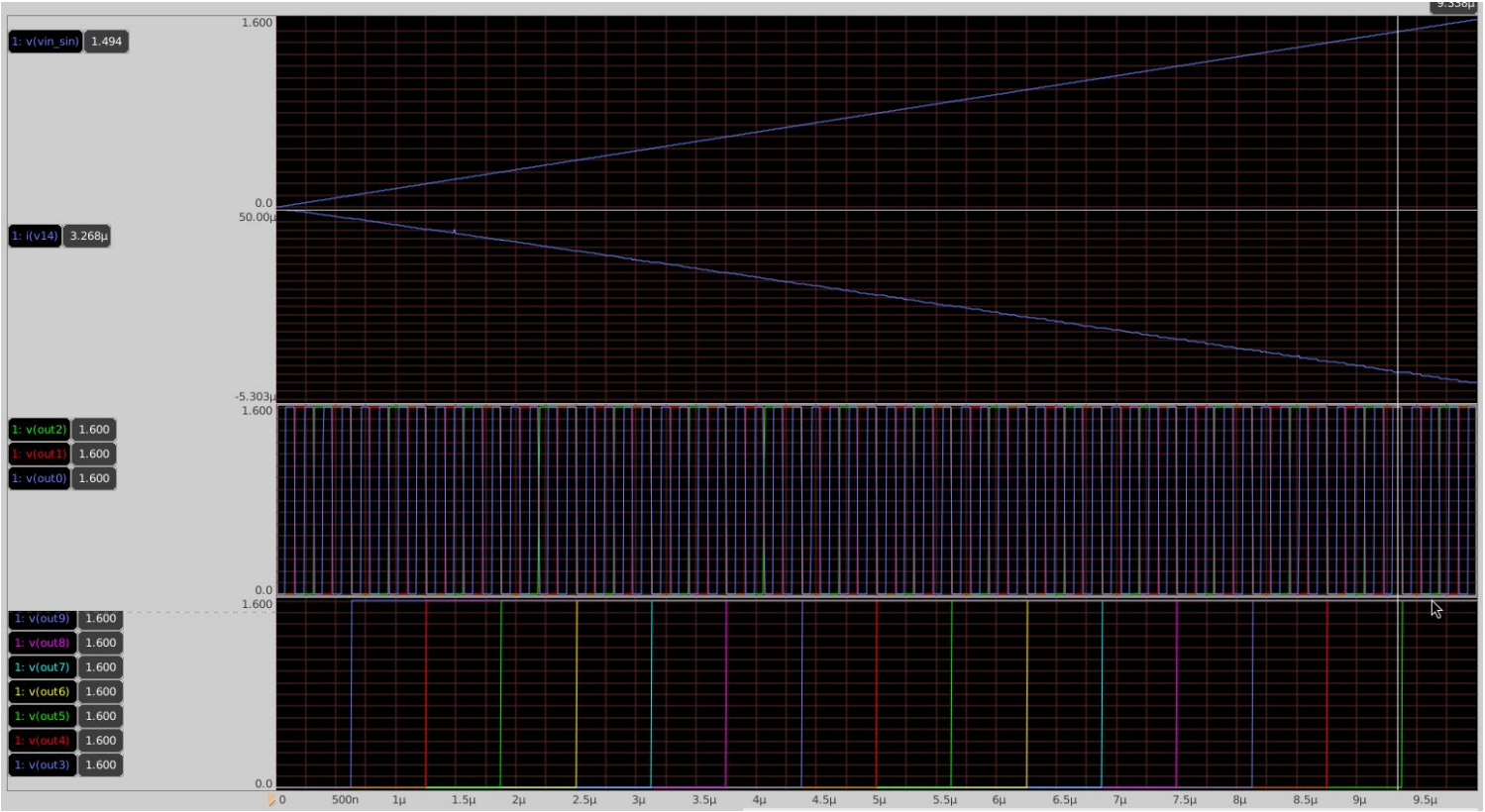
frequency = 100kHz | ISUM(expected) = 3.2uA | SEL = 1