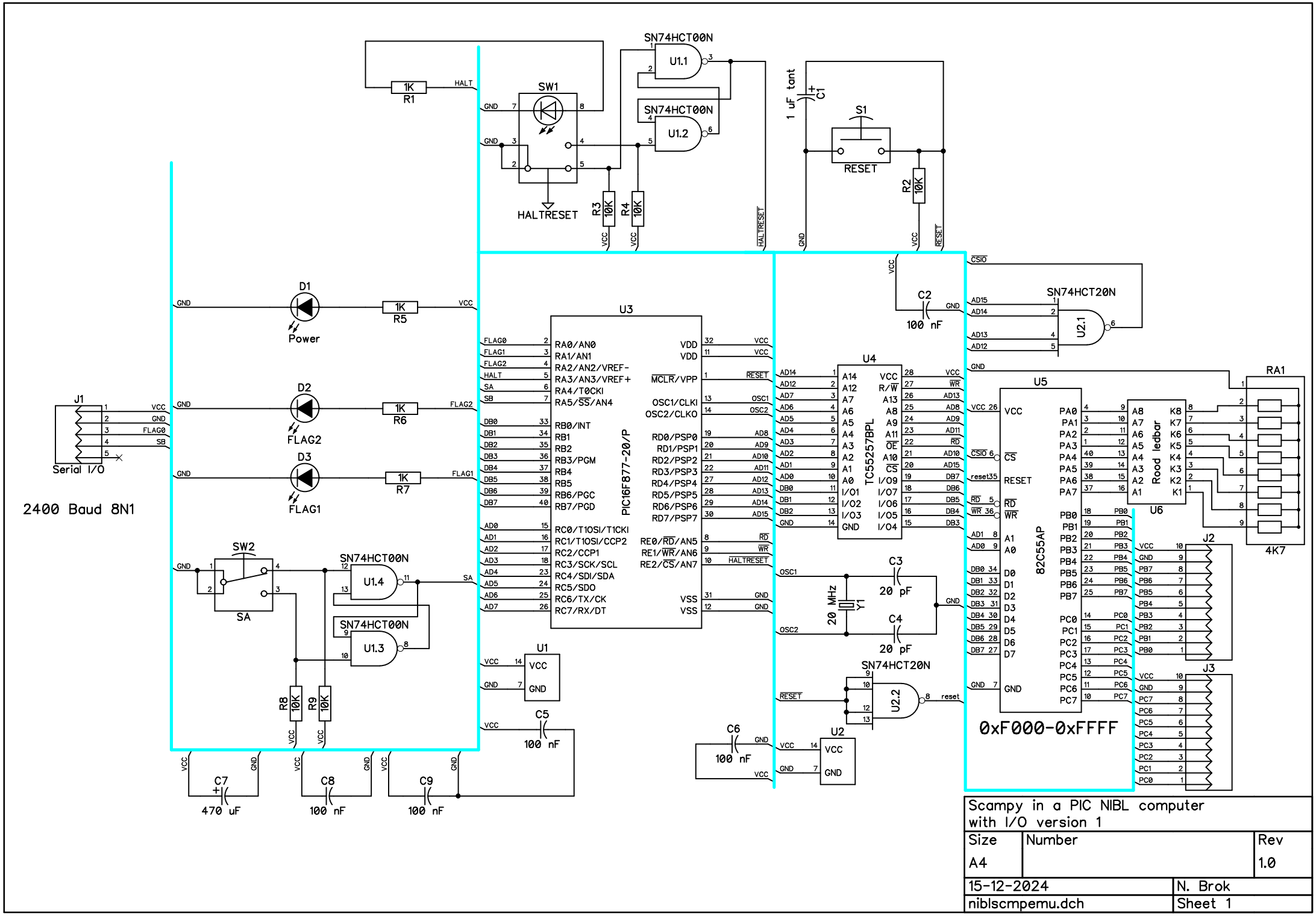

Scampy in a PIC NIBL computer
with I/O version 1

Size	Number	Rev
A4		1.0
15-12-2024		N. Brok
niblscmpemu.dch		Sheet 1