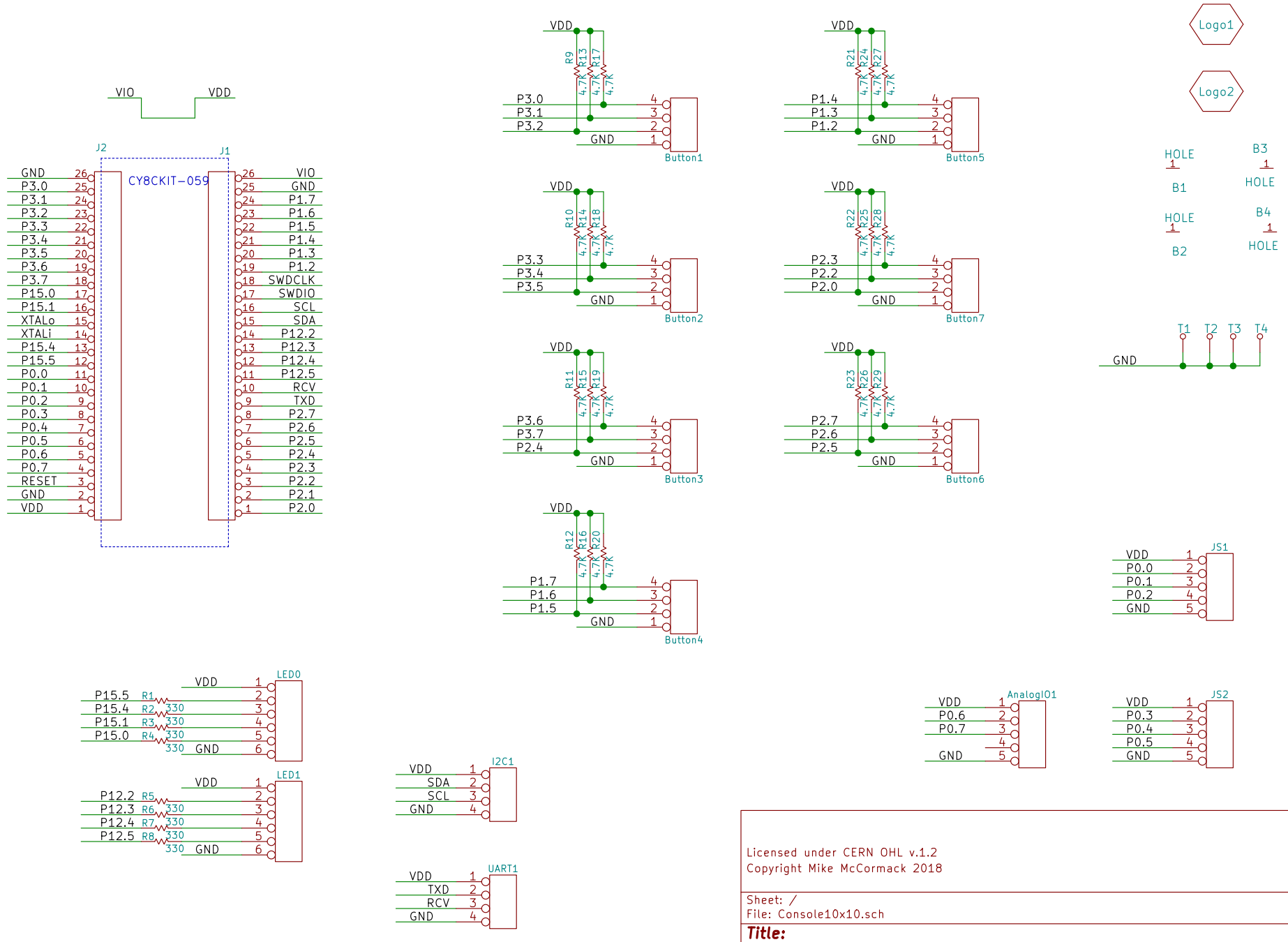

Licensed under CERN OHL v.1.2
Copyright Mike McCormack 2018

Sheet: /
File: Console10x10.sch

Title:

Size: A	Date:	Rev:
KiCad E.D.A. kicad 4.0.7		Id: 1/1