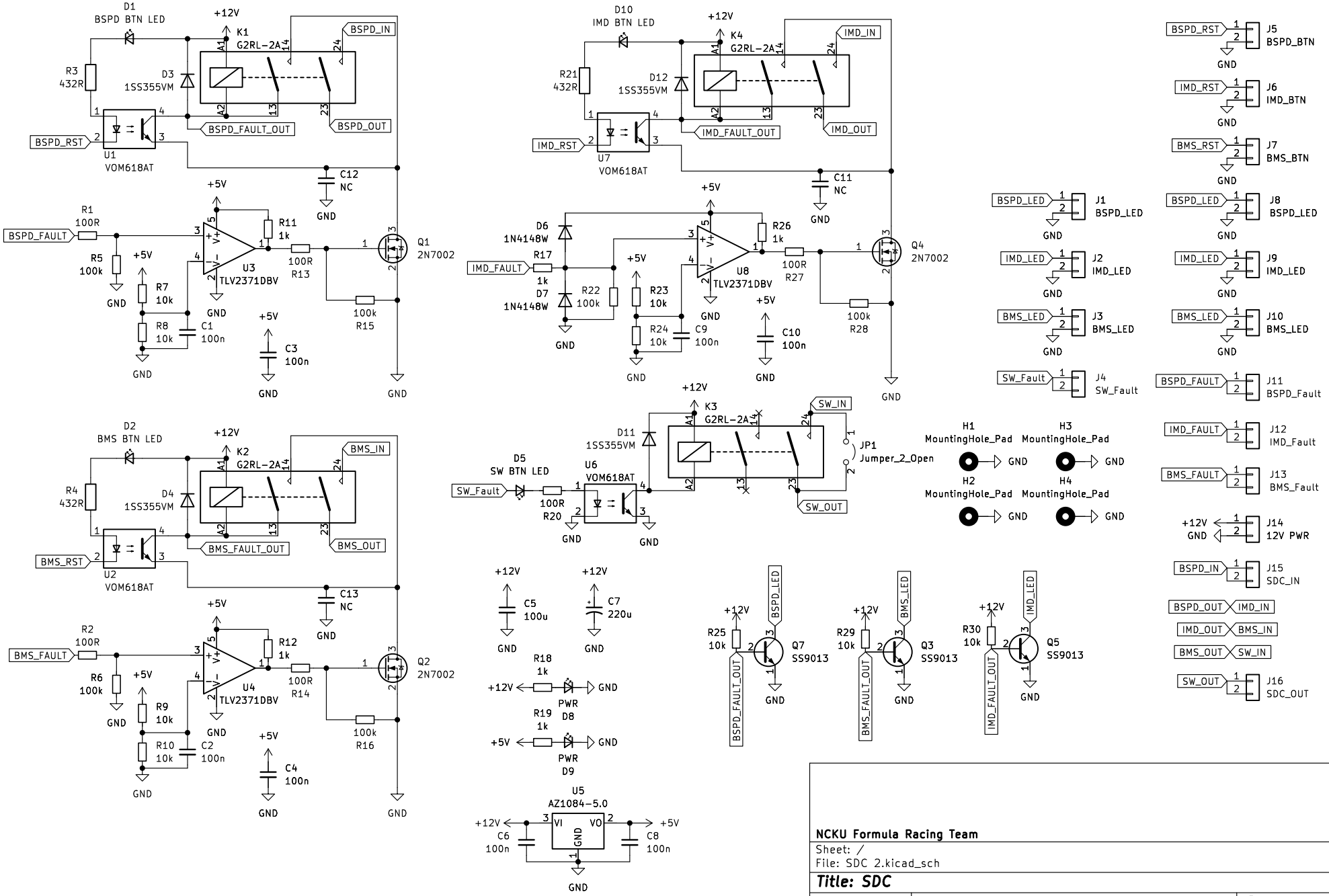

NCKU Formula Racing Team

Sheet: /

File: SDC 2.kicad_sch

Title: SDC

Size: A4	Date: 2024-11-30	**Rev:**
KiCad E.D.A. kicad 7.0.11		Id: 1/1