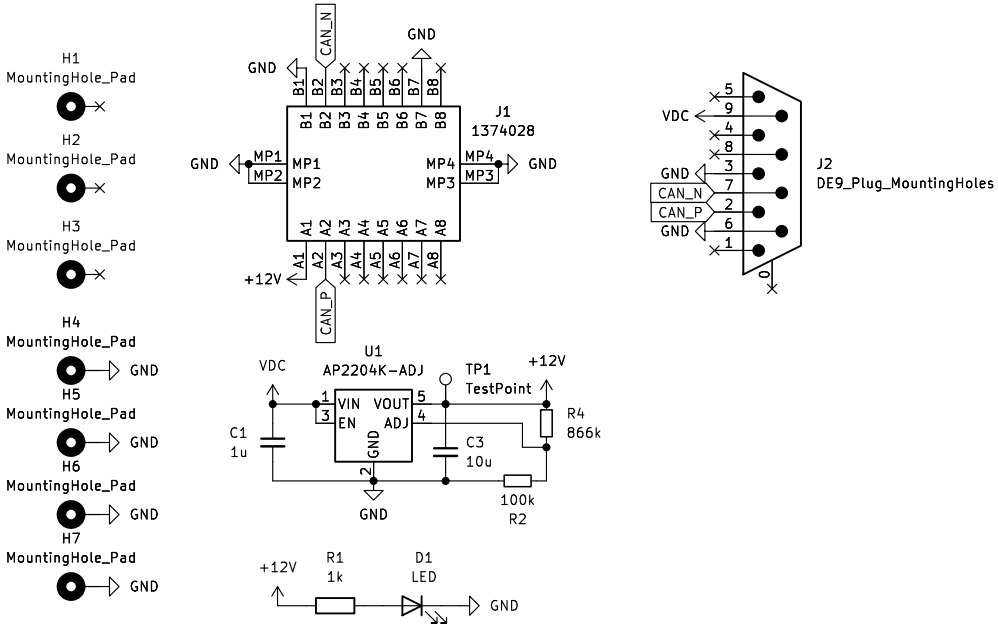

Sheet: /
File: imu-base.kicad_sch

Title:

Size: A5	Date:	**Rev:**
KiCad E.D.A. kicad 7.0.11		Id: 1/1