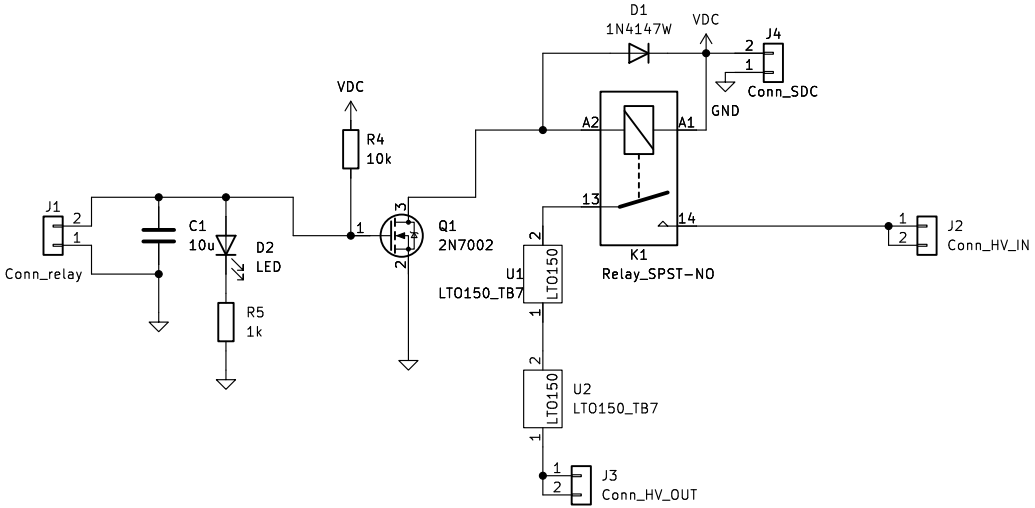

NCKU Formula Racing

Sheet: /

File: miniAIR.kicad_sch

Title: miniAIR

Size: A5	Date: 2025-03-12	**Rev:**
KiCad E.D.A. kicad 7.0.11		Id: 1/1