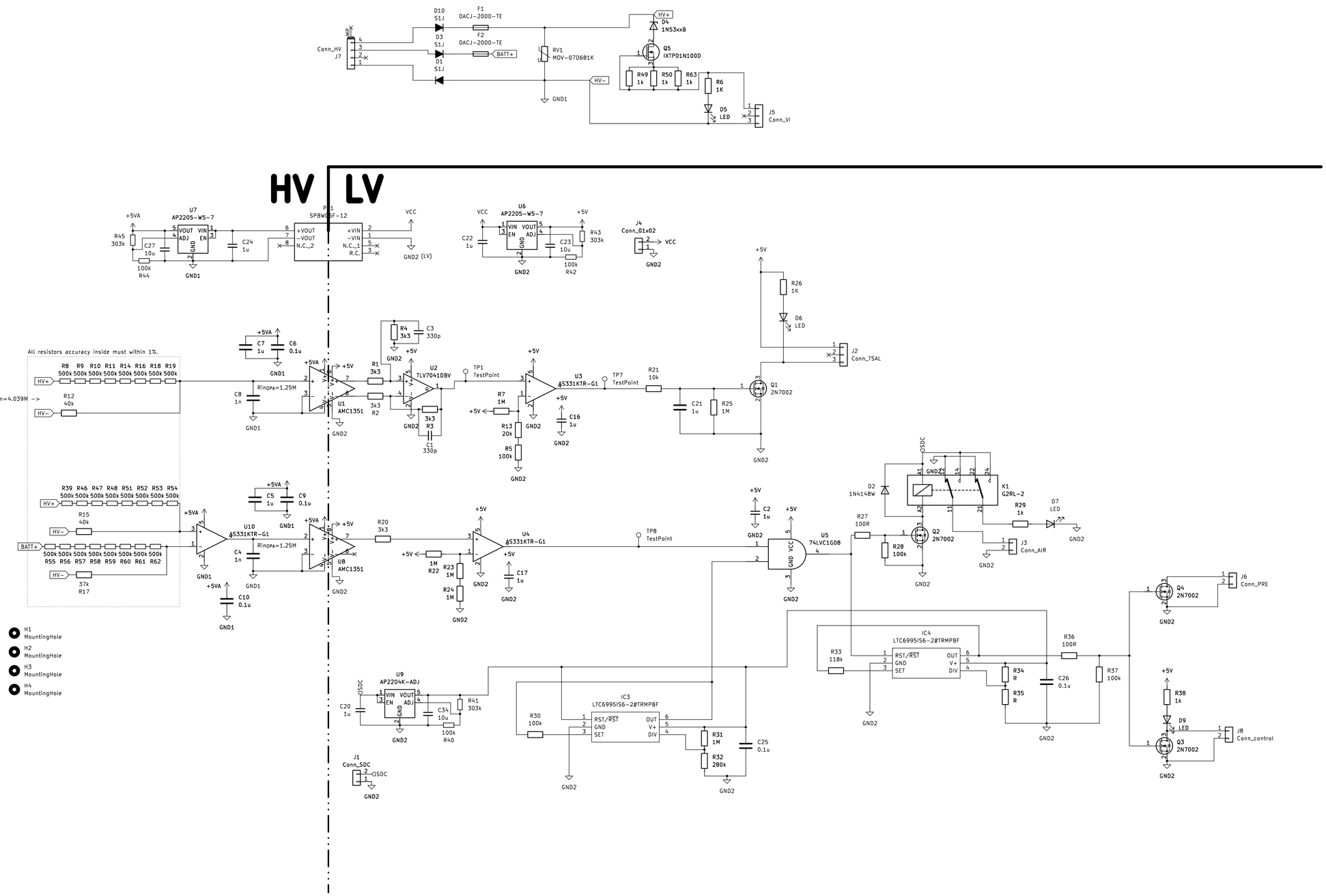

Sheet: /
File: TSAL.kicad_sch

Title:

Size: A2	Date: 2025-08-03	**Rev: v2025.08**
KiCad E.D.A. 8.0.8		Id: 1/1