Midi System AS440

Service
Service
Service

Volta ao Menu

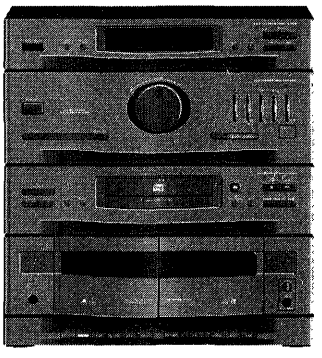

Service Manual

COMPACT disc DIGITAL AUDIO

TABLE OF CONTENTS

Specification	2 - 3
Measurement Setup	4
Connections & Controls	5 - 6
Dismantling Hints	7 - 9
Service Testprogram	10 - 12
Version Table	13 - 14
Wiring Diagram of Set	15 - 16
Block Diagram	17 - 19
MICRO MIX BOARD	
Circuit Diagram	20
Component Layout	20
FRONT BOARD	
Component Layout Copperside View	21 - 22
Circuit Diagram AF-Part	23 - 24
Component Layout Component Side View	25 - 26
Circuit Diagram Control Part	27 - 28
RECORD BOARD	
Component Layout	29
Adjustment Table	30
Circuit Diagram	31 - 32
POWER BOARD	
Component Layout	33 - 34
Circuit Diagram	35 - 36
TRAFO BOARD	
Circuit Diagram	37
Component Layout	37
ECO 4 TUNER	
Circuit Diagram	38 - 40
Component Layout	41 - 42
Adjustment Table	43
CD	
Dismantling Hints	44
Block Diagram	45 - 46
Startup Procedure	47
Faultfinding Tree	48
Abbreviations	49
Component Layout	50 - 52
Circuit Diagram	53 - 55
Wiring Diagram	56
Exploded View CD	57 - 58
Exploded Views of Set	59 - 62
Partslist	62 - 69

CLASS 1
LASER PRODUCT

Impresso no Brasil Sujeito a Modificações Todos os Direitos Reservados

4806 725 27008

07/94

PHILIPS

Specification

General:

Mains voltage	:	220V / 50Hz for /20, /22
	:	240V / 50Hz for /25
	:	120V or 230V /50Hz via voltage selector for /21, /30
	:	120V / 60Hz for /37
Power consumption	:	≤ 80 W at maximum output power
	:	≤ 10 W in stand by

Amplifier:

Output power	:	2 x 10W at 6Ω D=10%
Music power	:	2 x 33W at 6Ω
Headphone	:	6,3mm stereo jack 25mW at 32Ω (≡0,9V at 32Ω)
Power stage protection	:	Temperature
Frequency response	:	63 Hz - 14 kHz (-3dB) Limit
	:	63 Hz - 17 kHz (-3dB) Typical value
Tone control		
DBB	:	±6dB at 100 Hz
300 Hz	:	±6dB at 300 Hz
1 kHz	:	±6dB at 1 kHz
4 kHz	:	±6dB at 4 kHz
10 kHz	:	±6dB at 10kHz
Input sensitivity		
PHONO/LINE	:	350 mV

Tuner:		FM	MW	LW
Tuning range		87,5 - 108 MHz Grid 50 kHz	522 - 1611 kHz (Grid 9kHz) 530 - 1700 kHz (only for /37) (Grid 10kHz)	148 - 284 kHz (Grid 3kHz)
Aerial input		Coax F-Connector 75 Ω	Ferrite antenna	Ferrite antenna
IF		10,7 MHz ± 25 kHz	450 kHz ± 1 kHz	450 kHz ± 1 kHz
Sensitivity	Mono : 26dB S/N Stereo : 46dB S/N Search tuning	≤ 4 µV (2 µV typ.) ≤ 45 µV 7 µV typ.	3 mV/m (1,5 mV/m typ.) ≤ 6mV/m	≤ 6 mV/m ≤ 6mV/m
Distortion		≤3% (2% typ.) RF=1mV Δf=75kHz	≤5% (3% typ) RF=100mV/m m=80%	≤5% (3% typ) RF=100mV/m m=80%
Channel separation		≥26dB (30dB typ)	-	-
Image rejection ratio		30 dB (40 dB typ.)	27 dB (30 dB typ.)	40 dB (43 dB typ.)
-3 dB limiting point		≤ 5 µV (2 µV typ.)		

CD unit:

Have to be measured direct on internal connector 1300

Frequency response	:	20 - 20.000 Hz ±2 dB
Output level	:	2V ±3 dB
Signal/noise ratio	:	≥90 dB
Distortion	:	≤1% at 1 kHz
Channel difference	:	≤2 dB at 1 kHz
Channel crosstalk	:	50 dB max.
De emphasis	:	0 or 15/50µs switched automatically by subcode on the disc
Laser		
Output power	:	≤500µW
Wave length	:	780 ± 20 nm

Recorder part:

Tape speed	: 4,76cm/s ±2% in **N**ormal **S**peed
	: 8,5cm/s ±12% in **H**igh **S**peed **D**ubbing
Wow & Flutter	: ≤0,4%
Winding speed	: ≤ 130s for C60 cassette
Erase / Bias system	: AC 60kHz
RIF-shift	: service solution on request
Distortion at 200 nWb/m	: ≤ 5%
Channel difference at PB	: ≤ 3dB
Channel difference overall	: ≤ 3dB
Channel separation	: ≥ 18dB at 1kHz
Track separation	: ≥ 55dB at 1kHz

Phono part:

Power supply	: 12V DC / 80mA
Wow & Flutter	: 0,25% JIS
	: 0,35% DIN
Operating speed	: 33⅓ and 45 rpm
Drive system	: Belt drive with automatic return

	IEC I	IEC I (dubbing)	IEC II	IEC II (dubbing)	Dubbing HS[3]
Frequency response -8 dB[1]	100Hz - 10kHz	125Hz - 8kHz	100Hz - 10kHz	125Hz - 8kHz	125Hz - 8kHz
Signal to Hiss ratio[2] A-weighted	≥ 45 dB	≥ 45 dB	≥ 45 dB	≥ 45 dB	
Signal to Noise ratio[2] FF-weighted	≥ 40 dB	≥ 40 dB	≥ 40 dB	≥ 40 dB	
Erase attenuation [4]	≥ 55 dB	≥ 55 dB	≥ 55 dB	≥ 55 dB	

[1] typical value [2] at 250 nWb/m [3] at -10dB [4] Use a 1kHz passfilter to minimize the wide band noise component.

The set reacts on following RC5 commands:

	Systemcode	Commandcode
Stand by	17,20,21	12
Tuner	17	63
Aux/Phono	21	63
CD	20	63
Volume up	16	16
Volume down	16	17
Repeat	20	29
Shuffle	20	28
Scan	20	43
Play (CD)	20	53
Pause (CD)	20	48
Next (CD)	20	32
Previous (CD)	20	33
Search Forward (CD)	20	52
Search Backward (CD)	20	50
Stop (CD)	20	54
Tuning up	17	30
Tuning down	17	31
Preset up	17	32
Preset down	17	33

Tuner FM

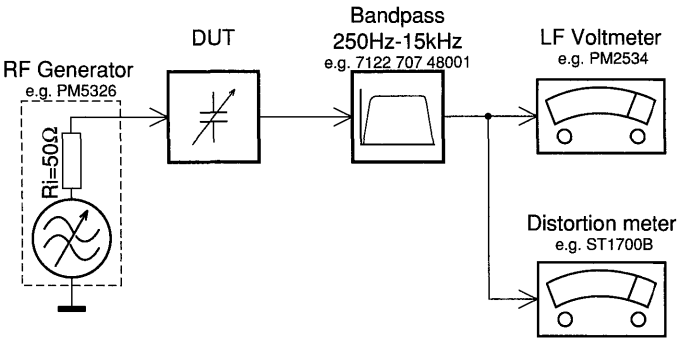

Use a bandpass filter to eliminate hum (50Hz, 100Hz) and disturbance from the pilottone (19kHz, 38kHz).

Tuner AM (MW,LW)

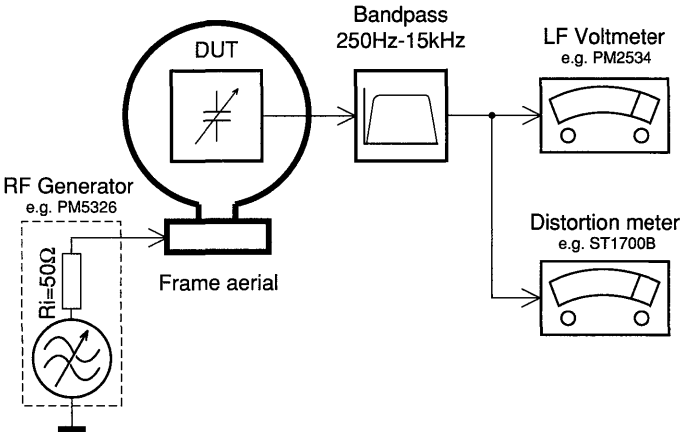

To avoid atmospheric interference all AM-measurements have to be carried out in a Faraday´s cage.
Use a bandpass filter (or at least a high pass filter with 250Hz) to eliminate hum (50Hz, 100Hz).

CD

Use Audio Signal Disc
L.P.F. = 13th order filter

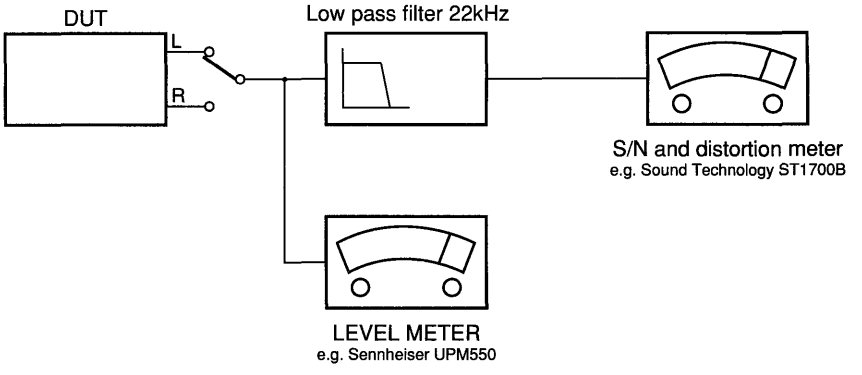

Connection & Controls

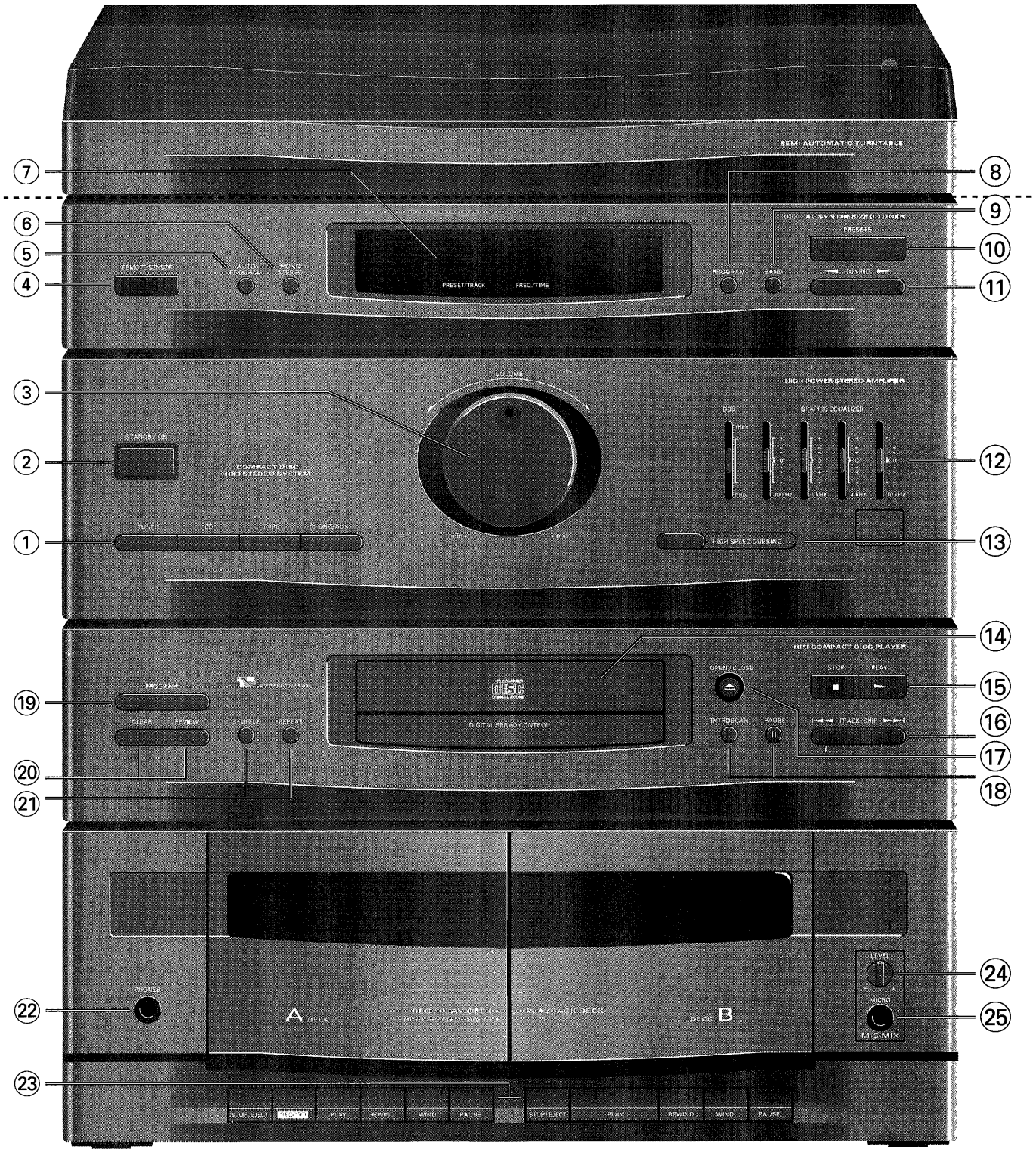

1 Source selector
  Tuner
  CD
  Tape
  Phono/Aux
2 Stand by
3 Volume
4 Remote sensor
5 Auto Program
6 Mono/Stereo
7 Display
8 Program (Tuner)
9 Band
10 Presets
  Up
  Down
11 Tuning
  Up
  Down
12 Graphic Equalizer
  100Hz/DBB
  300Hz
  1kHz
  4kHz
  10kHz
13 High Speed Dubbing
14 CD Tray
15 Stop (CD)
  Play (CD)
16 Track skip (CD)
  |◄◄
  ►►|

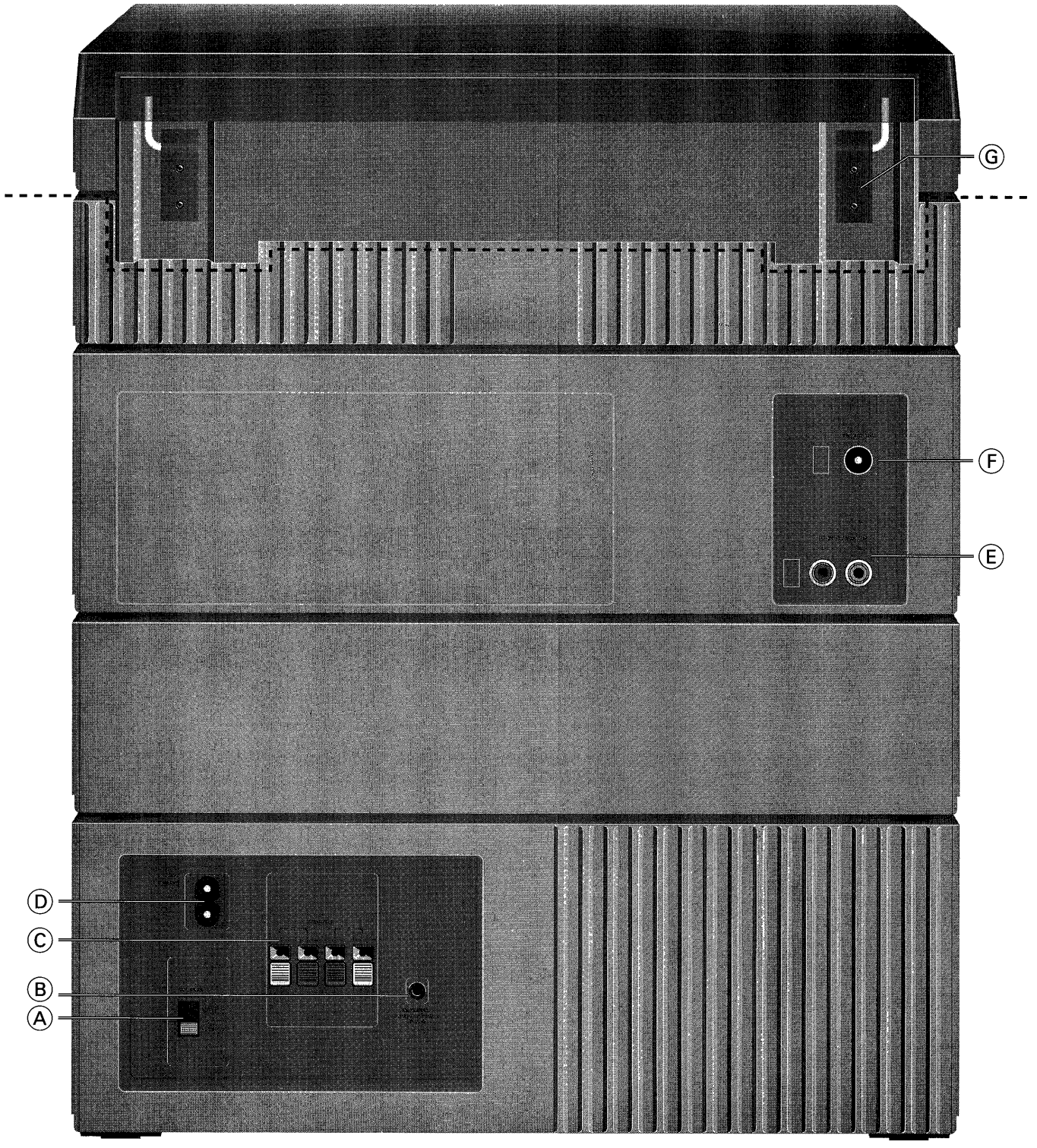

17 Open/Close (CD)
18 Introscan (CD)
Pause (CD)
19 Program (CD)
20 Clear (CD)
21 Review (CD)
22 Headphone socket
23 Tape transport keys
24 Micro Mix Level
25 Microphone socket

A Voltage selector
B Phono supply
C Speaker terminal
D Mains socket
E Aux / Phono sockets
F FM aerial socket
for ECO 4 Tuner
FM aerial socket
for Tuner 92

Dismantling Hints

Dismantling of Top Cover

Remove 3x screws.

1. Press torx screw driver into holes (see picture 1) to release hidden snaps.
2. Lift top cover.

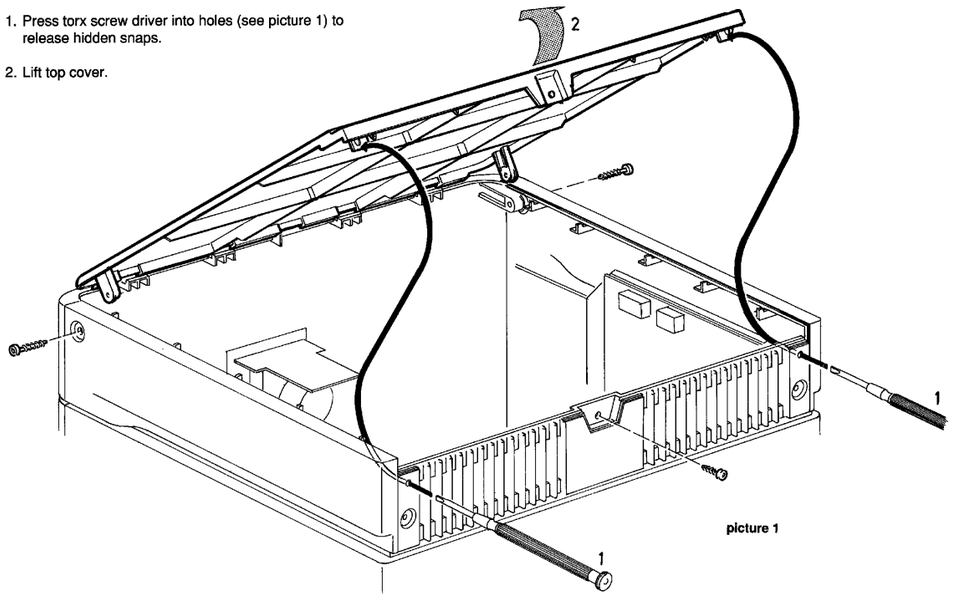

picture 1

Dismantling Window of Cassette Door

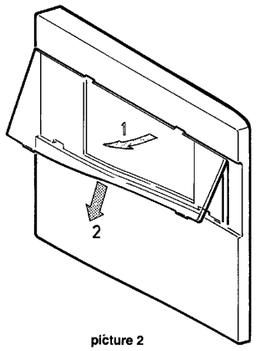

picture 2

1) Press the window outside as shown in picture 2. You don´t need any tool.

Dismantling Cassette Door Ornamental Part

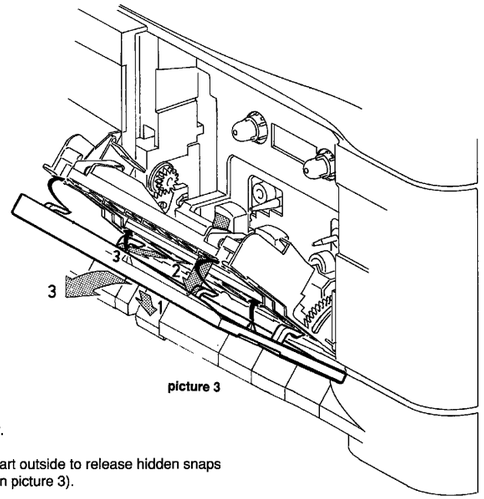

picture 3

1) Open cassette door.
2) Press ornamental part outside to release hidden snaps (see black arrows on picture 3).
3) Pull ornamental part upwards.

Dismantling Cassette Door Technical Part

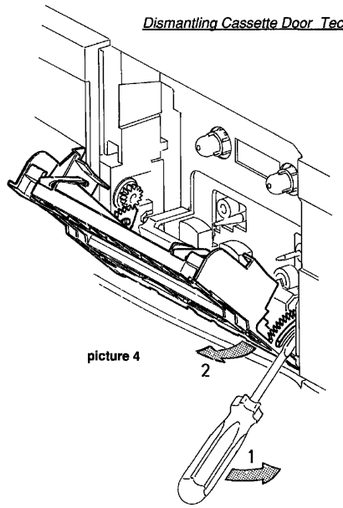

picture 4

Remove ornamental part first.

1) Bend tooth segment with a screw driver to release snap as shown in picture 4.
2) Pull cassette door outside.

Dismantling of Damper

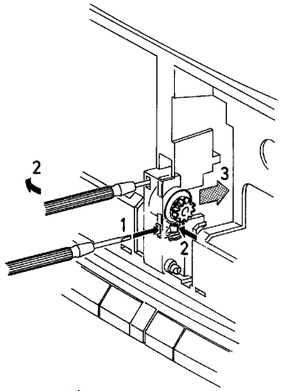

picture 5

Remove Tape Transports and bracket (506) first.

1+2) Release two snaps as shown in picture 5.

3) Pull damper outside.

Mounting of Volume Knob

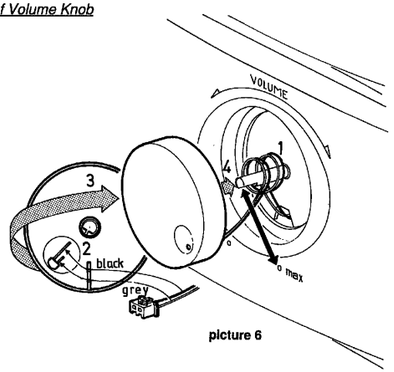

picture 6

1) Turn Volume pot to max. (clockwise)
2) Pay attention to the polarity of the LED.
3) Turn the cable two times clockwise onto the axle.
4) Insert the knob.

SERVICE TEST PROGRAM

The service test programm can be left:
- **at each step:** by switching power off (disconnect mains)
- **from service main menu:**
  by pressing the Standby button twice the set is switched to normal working mode except: * in TUNER mode still the service preset frequencies are available.
  * in CD mode the error codes will be displayed.

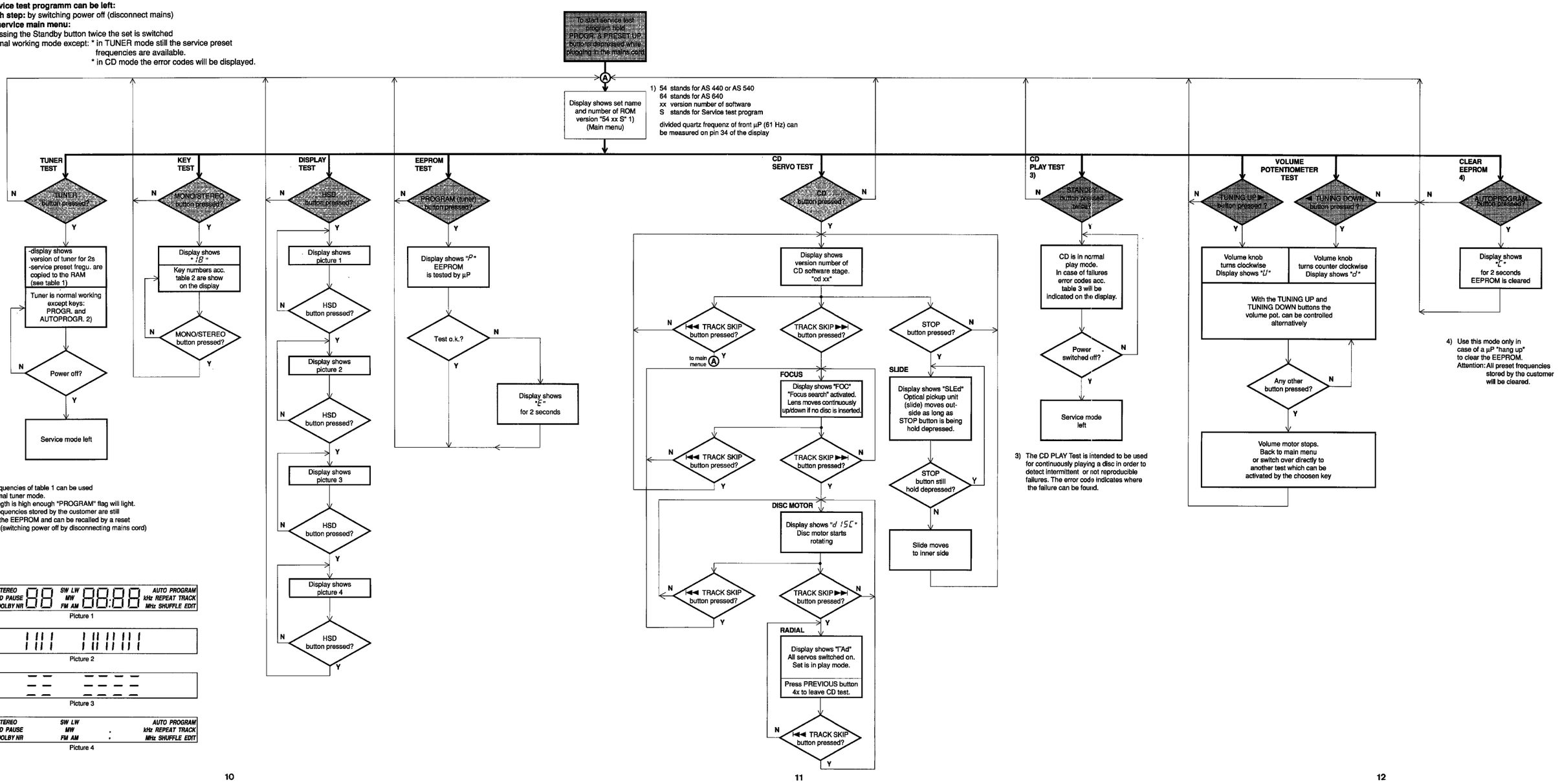

2) Preset frequencies of table 1 can be used as in normal tuner mode.
If fieldstregth is high enough "PROGRAM" flag will light.
Preset frequencies stored by the customer are still stored in the EEPROM and can be recalled by a reset of the µP (switching power off by disconnecting mains cord)

Picture 1

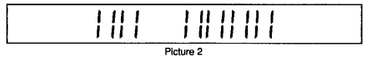
Picture 2

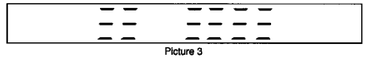
Picture 3

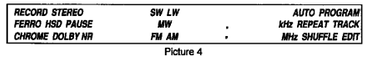

Picture 4

3) The CD PLAY Test is intended to be used for continuously playing a disc in order to detect intermittent or not reproducible failures. The error code indicates where the failure can be found.

4) Use this mode only in case of a µP "hang up" to clear the EEPROM.
Attention: All preset frequencies stored by the customer will be cleared.

	VERSION						
	EUR	EAS	USA	EUS	OSE	OSS	
PRESET	Europe 3-band	East Europe 3-band	USA 2-band	Europe 4-band	Oversea 2-band	Oversea 3-band	UNIT
1	87,5	65,81	87,5	87,5	87,5	87,5	MHz
2	108	74	108	108	108	108	MHz
3	98	87,5	98	98	98	98	MHz
4	89,7	108	89,7	89,7	89,7	89,7	MHz
5	93	98	93	93	93	93	MHz
6	104,9	89,7	104,9	104,9	104,9	104,9	MHz
7	522	93	530	522	530	530	kHz
8	1611	104,9	1710	1611	1710	1710	kHz
9	540	522	540	540	540	540	kHz
10	549	1611	550	549	550	550	kHz
11	558	540	560	558	560	560	kHz
12	1494	549	1500	1494	1500	1500	kHz
13	153	558	1600	153	1600	1600	kHz
14	279	1494	1000	279	1000	3900	kHz
15	156	153		156		12100	kHz
16	198	279		198		4250	kHz
17	270	156		270		8000	kHz
18	999	198		5900		11900	kHz
19		270		18100		1000	kHz
20		999		6200			kHz
21				17000			kHz
22				12000			kHz
23				999			kHz

table 1

Key activated	Display shows	Key activated	Display shows
Tuning up	01	Autoprogram	17
Tuning down	03	Mono / Stereo	18
Preset up	04	Tuner	19
Preset down	02	Stand by	20
Dolby [1]	05	Tape	21
Band	06	Phono / Aux	22
Program(Tuner)	07	CD	23
Fe/Cr [1]	08	—	—
Introscan	09	Repeat	25
Pause (CD)	10	Shuffle	26
≪ Track skip	11	Review	27
Track skip ≫	12	Clear	28
HS dubbing	13	—	—
Open/Close	14	Edit [1]	30
Stop (CD)	15	—	—
Play (CD)	16	Program (CD)	32

table 2

If a key is activated at the remote control ⌐ ⌙ is shown additionally to the key number as long as the key is hold depressed.

1) key not available in all versions.

Error code shown on the display	Description
Er 1002	Focus error
Er 1007	Subcode error, no valid subcode
Er 1008	TOC error, out of lead-in area while reading TOC
Er 1009	CD4 + decoder error
Er 1010	Radial error
Er 1012	Fatal sledge error
Er 1013	Turntable motor error
Er 1030	Too many grooves to jump
Er 1031	Search error
Er 1032	Search binary error
Er 1033	Search index error
Er 1034	Search time error
Er 1037	Selector error
Er 1050	Edit calculation error
Er 1051	Edit track count error
Er 1052	Edit Optimal error

table 3

WIRING DIAGRAM

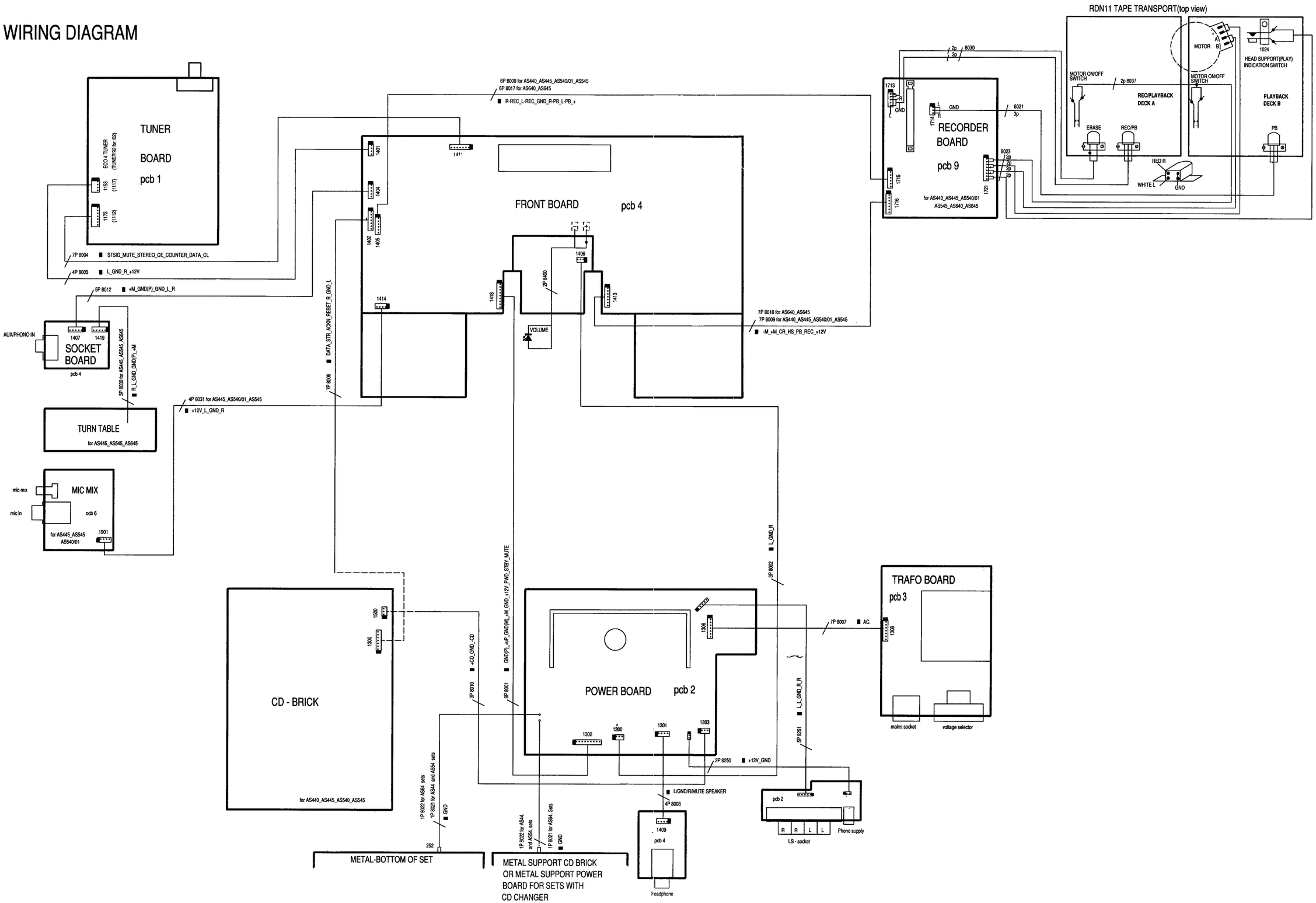

APPARATUS BLOCK DIAGRAM

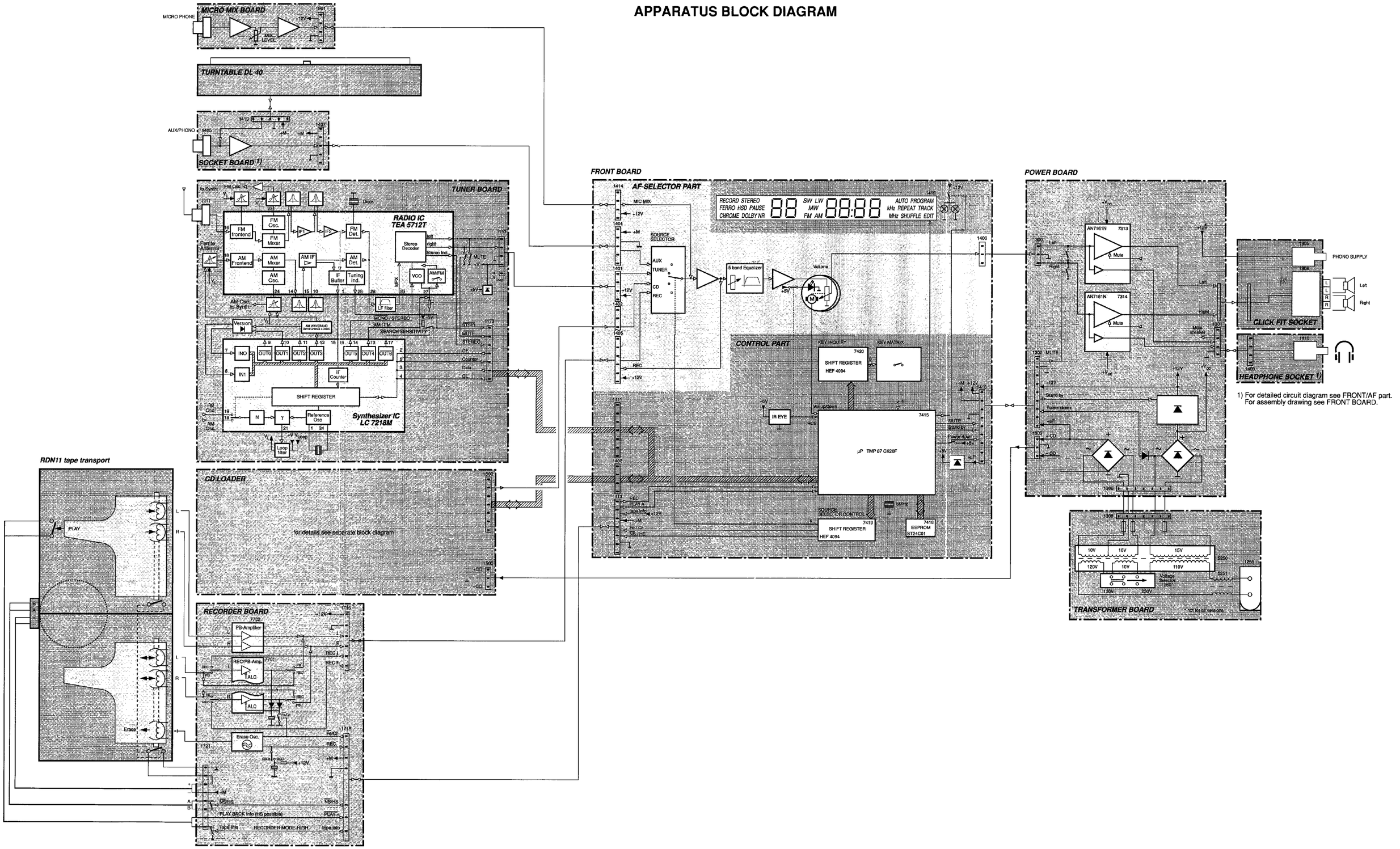

1) For detailed circuit diagram see FRONT/AF part. For assembly drawing see FRONT BOARD.

Micro Mix only in versions with Record Player

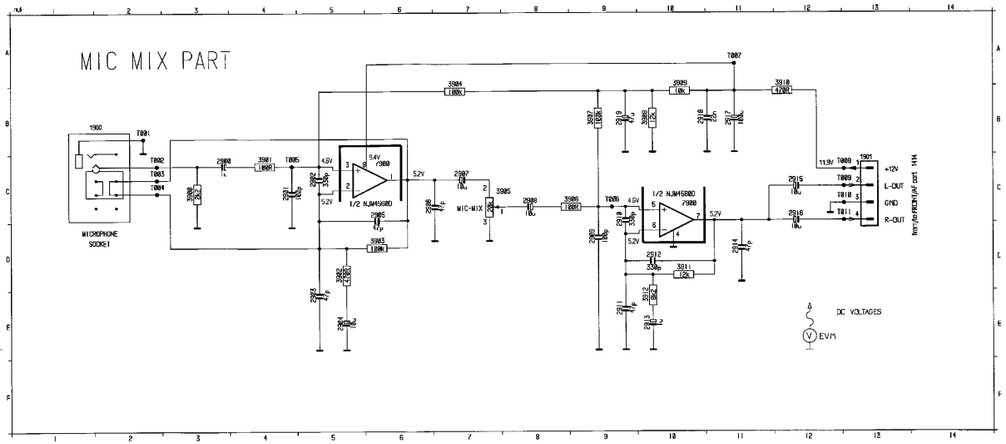

1900	B 1	2985	A 3	2912	B 3	2910	B 3
1901	C 2	2980	A 2	2913	C 3	3986	A 2
2980	C 2	2987	C 1	2914	B 2	3981	B 3
2981	A 2	2988	C 2	2915	C 3	3982	A 2
2982	A 2	2989	B 2	2916	C 3	3983	A 3
2983	A 2	2918	B 2	2917	C 2	3984	B 3
2984	A 3	2911	B 2	2919	B 3	3985	A 1

3985	C 2	7989	B 2	3916	C 2	3911	B 3
3987	B 2	6989	B 2	3911	B 3	3912	C 3
3989	B 2	2981	C 2	7988	C 3		
3988	C 2	2982	A 2	1982	C 3		

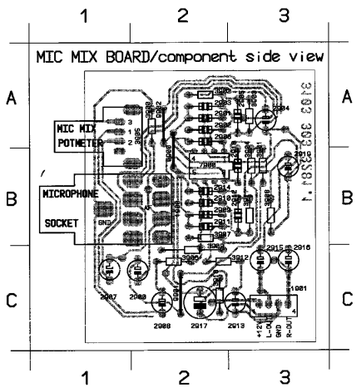

3002	C 10	3484	B 11	2453	B 3	3802	A 9
3003	C 10	3485	B 11	2454	E 3	3803	A 9
3004	C 7	3486	E 3	2455	F 8	3804	A 9
3005	F 7	3487	E 4	2455	C 13	3805	D 7
3006	F 7	3488	C 3	2457	E 1	1401	A 1
3007	C 9	3489	E 2	2458	C 1	1402	C 1
3008	B 5	3490	E 2	2459	H 9	1404	B 1
3401	B 7	3491	F 8	2478	I 9	1405	B 1
3402	B 5	3492	F 7	2471	H 9	1406	B 9
3403	E 3	3493	E 7	2472	I 9	1407	H 9
3404	E 7	3494	E 7	2473	I 9	1408	I 9
3405	E 8	3495	E 8	2475	A 2	1409	I 5
3406	E 8	3496	E 8	2476	F 12	1410	I 6
3407	E 8	3497	E 8	2477	I 10	1411	A 4
3408	E 2	3498	E 8	2382	E 5	1412	F 5
3409	B 8	3499	B 8	2383	D 5	1414	F 1
3410	A 4	3500	A 4	2384	B 6	1415	A 5
3411	A 4	3501	A 4	2385	A 11	1416	B 6
3412	C 9	3502	C 9	2387	B 12	1417	B 7
3413	C 9	3503	C 9	2388	A 3	1418	F 5
3414	A 12	3504	A 12	2389	A 3	1419	H 10
3415	A 12	3505	A 12	2516	A 4	1421	B 13
3416	B 4	3506	B 4	2512	E 5	1422	E 12
3417	B 4	3507	B 4	2513	E 5	1424	I 12
3418	B 4	3508	B 4	2514	C 4	1425	A 13
3419	C 4	3509	B 4	2552	I 4	1426	A 12
3420	B 4	3510	A 3	2553	I 5	1427	I 10
3421	B 12	3511	A 3	2554	I 5	1428	I 13
3422	B 12	3526	B 3	2555	I 5	1429	I 10
3423	B 12	3528	B 2	2556	D 13	1430	I 11
3424	B 12	3529	A 3	2557	D 13	1431	I 12
3425	B 12	3530	A 3	2558	C 12	1432	I 13
3426	B 12	3531	A 3	2559	A 3	1433	F 10
3427	B 12	3532	A 3	3481	A 1	1434	B 11
3428	B 12	3533	A 3	3482	A 1	1435	B 11
3429	B 12	3534	A 3	3483	A 1	1436	B 9
3430	B 12	3535	A 3	3484	A 1	1437	F 4
3431	B 12	3536	A 3	3485	C 1	1438	F 2
3432	B 12	3537	B 4	3486	C 1	1439	E 1
3433	B 12	3538	B 4	3487	C 1	1440	F 1
3434	B 12	3539	B 4	3488	C 1	1441	I 1
3435	B 12	3540	E 8	3489	D 2	1442	I 3
3436	B 12	3552	F 4	3490	D 2	1443	I 3
3437	B 12	3554	A 13	3418	D 2	1444	F 3
3438	B 12	3555	A 12	3413	D 1	1445	I 1
3439	B 12	3556	A 13	3414	D 1	1447	I 2
3440	B 12	3557	A 13	3415	I 9	1448	D 3
3441	C 12	3558	A 13	3410	I 8	2491	A 2
3442	B 13	3559	B 11	3417	D 3	2482	A 2
3443	B 13	3560	B 11	3419	C 9	2483	D 3
3444	B 13	3561	B 11	3420	C 2	2484	E 2
3445	B 13	3562	A 11	3421	D 3	2485	D 4
3446	B 13	3563	D 5	3428	C 2	2486	D 2
3447	B 12	3564	A 11	3423	D 2	2487	D 2
3448	B 12	3565	A 2	3422	C 2	2488	D 2
3449	C 13	3566	B 8	3423	D 2	2489	D 2
3450	B 12	3572	A 11	3424	D 2	2490	D 2
3451	B 11	3573	F 9	3425	D 4	2486	D 2
3452	B 11	3574	F 9	3426	C 4	2480	C 2
3453	B 11	3575	G 9	3427	F 2	2418	H 3
3454	B 11	3576	F 11	3429	E 3	2411	C 3
3455	B 11	3577	E 9	3431	F 2	2412	H 2
3456	B 11	3578	F 9	3432	F 3	2413	C 4
3457	B 11	3579	F 10	3433	F 1	2414	H 2
3458	B 11	3580	F 11	3434	F 1	2415	C 3
3459	B 11	3581	E 10	3435	E 2	2416	B 3
3460	B 11	3582	B 4	3436	E 3	2417	C 4
3461	B 11	3583	C 5	3437	D 2	2418	B 3
3462	B 11	3584	F 5	3438	D 2	2410	F 2
3463	C 11	3585	B 11	3439	D 12	2420	E 3
3464	D 12	3586	B 4	3440	D 12	2421	E 2
3465	C 11	3587	B 4	3441	C 12	2422	F 3
3466	C 11	3588	A 4	3442	D 13	2423	D 2
3467	C 11	3589	A 4	3443	D 13	2424	D 4
3468	C 11	3590	A 4	3444	D 13	2425	F 2
3469	C 12	3591	A 4	3445	D 12	2426	F 3
3470	C 12	3592	A 4	3446	D 12	2427	E 2
3471	C 12	3593	A 4	3447	D 12	2428	E 3
3472	C 13	3594	A 4	3448	D 12	2429	E 13
3473	C 13	3595	B 5	3449	D 11	2430	E 13
3474	D 13	3596	B 5	3450	D 11	2431	E 12
3475	F 2	3597	B 5	3451	D 11	2432	E 13
3476	E 3	3598	A 2	3452	D 11	2433	D 12
3477	F 2	3599	B 5	3453	D 11	2434	D 13
3478	F 7	3600	B 5	3454	D 11	2435	E 12
3479	E 3	3601	A 2	3455	D 11	2436	E 12
3480	C 12	3602	A 2	3456	D 11	2437	D 12
3481	D 13	3603	A 2	3457	E 11	2438	D 12
3482	D 12	3604	A 2	3458	E 11	2439	E 11
3483	D 12	3605	A 2	3459	E 12	2440	E 11
3484	D 12	3606	A 2	3460	E 12	2441	E 11
3485	D 12	3607	C 2	3461	E 12	2442	E 11
3486	D 12	3608	C 2	3462	E 13	2443	E 10
3487	D 12	3609	C 2	3463	C 11	2444	E 11
3488	D 12	3610	B 10	3464	D 12	2445	D 11
3489	E 12	3611	B 5	3465	C 12	2446	D 11
3490	E 12	3612	B 5	3466	C 12	2447	C 4
3491	E 12	3613	C 7	3467	C 12	2448	C 4
3492	E 13	3614	A 2	3468	C 12	2449	C 13
3493	E 12	3615	A 2	3469	C 12	2450	C 12
3494	D 12	3616	A 2	3470	C 13	2451	C 11
3495	E 1	3617	G 7	3471	C 13	2452	C 12
3496	E 1	3618	F 5	3472	E 13	2453	D 13
3497	E 1	3619	G 5	3473	C 13	2454	D 13
3498	E 1	3620	E 2	3474	D 13	2455	C 11
3499	E 1	3621	E 1	3475	F 2	2456	C 12
3500	E 1	3622	E 1	3476	E 3	2457	D 13
3501	E 1	3623	E 2	3477	F 2	2458	D 3
3502	E 1	3624	E 1	3478	F 7	2459	C 11
3503	E 1	3625	E 2	3479	E 3	2460	D 3
3504	E 1	3626	E 1	3480	C 12	2461	D 3
3505	E 1	3627	E 1	3481	D 13	2462	D 4
3506	E 1	3628	E 1	3482	D 12		
3507	E 1	3629	E 1	3483	D 12		
3508	E 1	3630	E 1	3484	D 12		

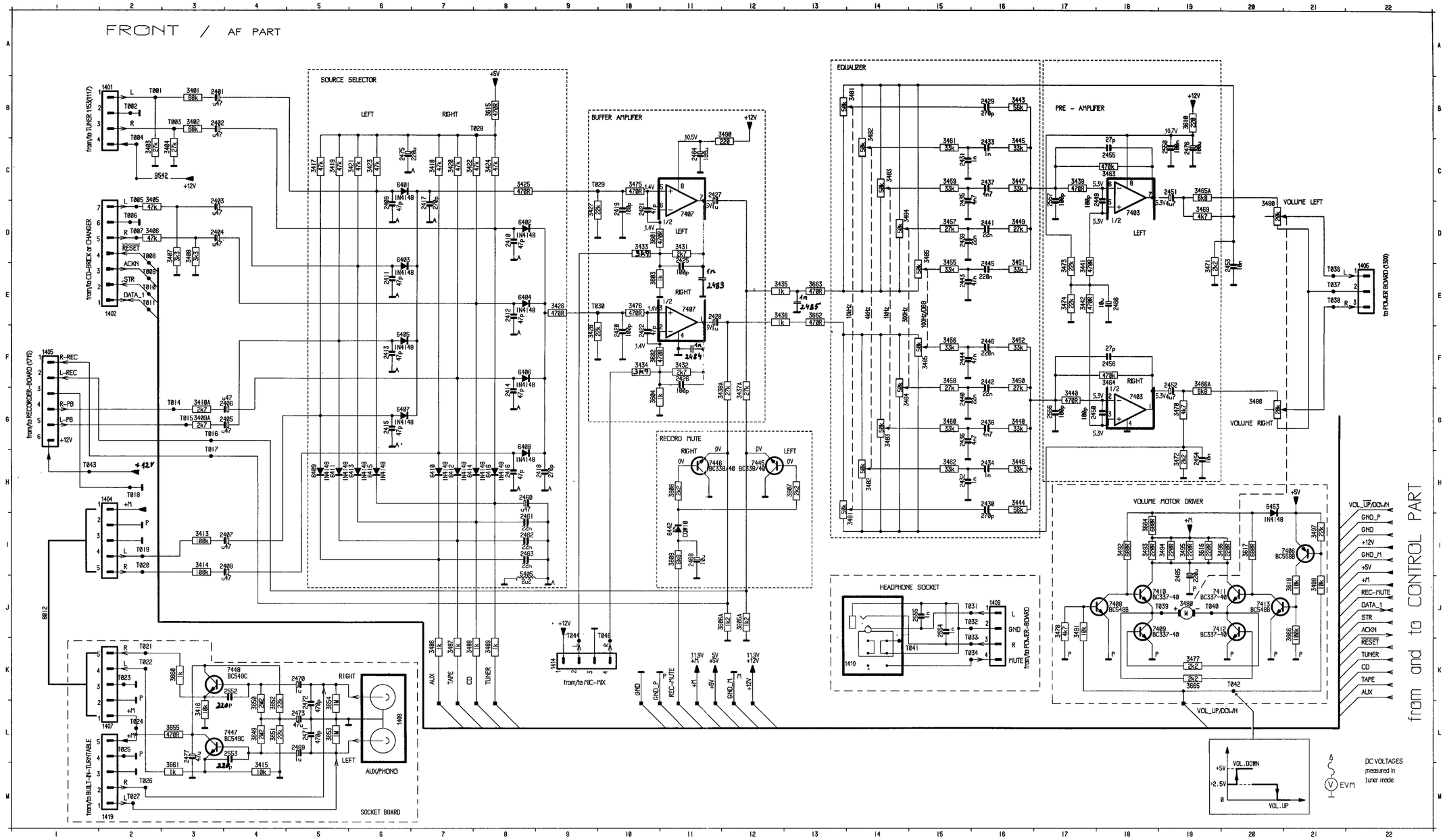
FRONT / AF PART
SOURCE SELECTOR
LEFT
RIGHT
BUFFER AMPLIFIER
EQUALIZER
PRE - AMPLIFIER
VOLUME LEFT
VOLUME RIGHT
RECORD MUTE
HEADPHONE SOCKET
VOLUME MOTOR DRIVER
SOCKET BOARD
AUX/PHONO
from/to TUNER (15SX117)
from/to CD-BRICK or CHANGER
from/to RECORDER-BOARD (075)
from/to BUILT-IN-TURNTABLE
from/to MIC-MIX
from/to POWER BOARD (1300)
from and to CONTROL PART
VOL_UP/DOWN
GND_P
GND
+12V
GND_M
+5V
+M
REC-MUTE
DATA_1
STR
ACKN
RESET
TUNER
CD
TAPE
AUX
VOL.DOWN
VOL.UP
DC VOLTAGES measured in tuner mode
EVM

FRONT / component side view

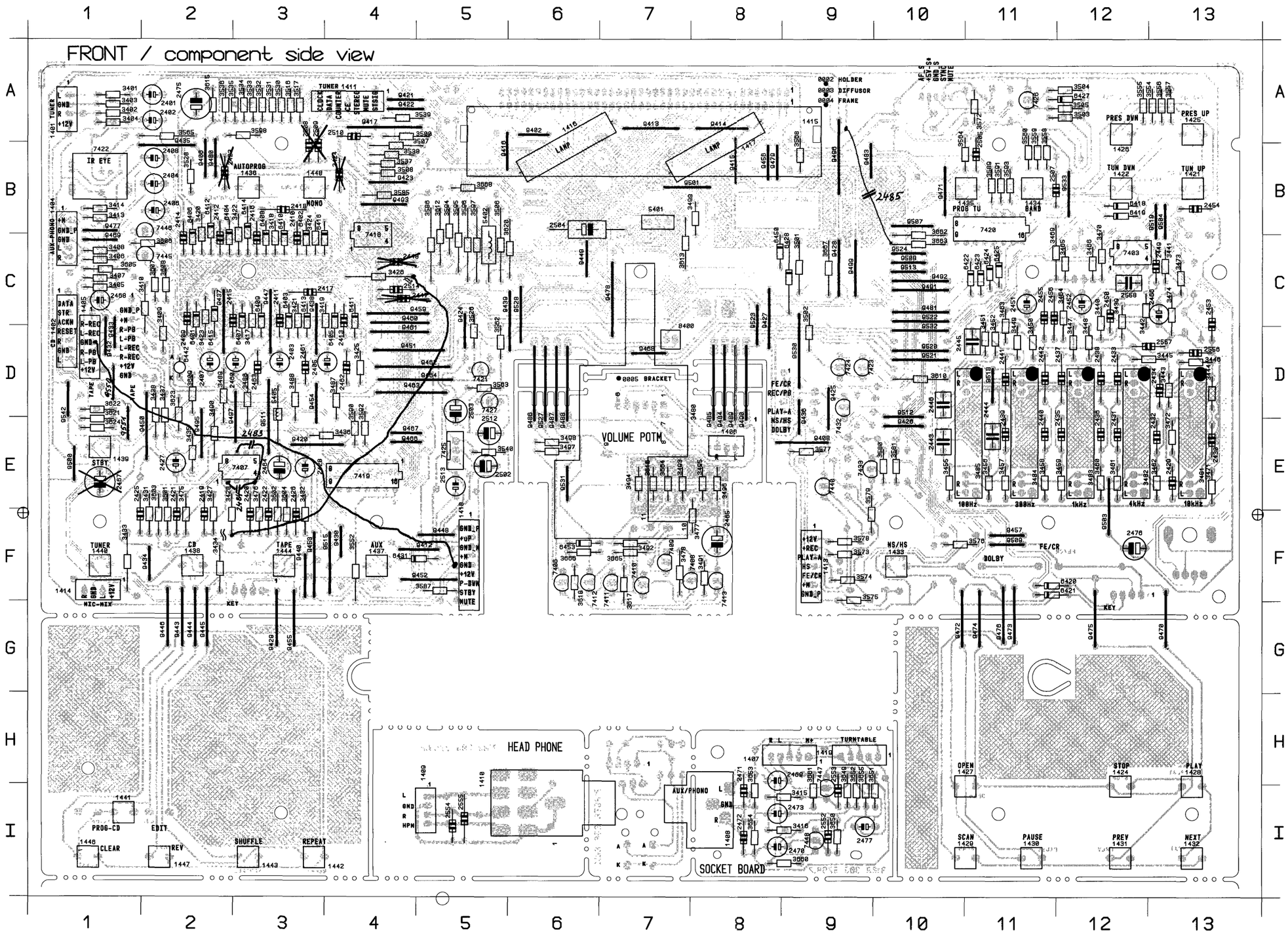

0002	A 9	2483	D 3	3484	D 11	3652	B 10
0003	A 9	2484	E 3	3485	D 11	3653	C 10
0004	A 9	2485	F 8	3486	E 3	3654	E 7
0005	D 7	2486	C 13	3487	E 4	3655	F 7
1401	A 1	2487	E 1	3488	E 3	3656	F 7
1402	C 1	2488	C 1	3489	E 2	3657	C 9
1404	B 1	2489	H 9	3490	E 2	3658	B 5
1405	C 1	2470	I 9	3491	F 8	5401	B 7
1406	E 8	2471	H 8	3492	F 7	5402	B 5
1407	H 9	2472	I 8	3493	E 7	5405	E 3
1408	I 8	2473	I 9	3494	E 7	6401	D 2
1409	I 5	2475	A 2	3495	E 8	6402	C 3
1410	I 6	2476	F 12	3496	E 8	6403	D 3
1411	A 4	2477	I 10	3497	E 6	6404	C 3
1413	F 9	2502	E 5	3498	E 6	6405	D 4
1414	F 1	2503	D 5	3499	B 8	6406	C 2
1415	A 5	2504	B 8	3500	A 4	6407	D 3
1416	B 6	2505	A 11	3501	C 9	6408	C 3
1417	B 7	2507	B 12	3502	C 9	6409	D 3
1418	F 5	2508	A 3	3503	A 11	6410	C 3
1419	H 10	2509	A 3	3504	A 12	6411	D 4
1421	B 13	2510	A 4	3505	A 12	6412	C 2
1422	B 12	2512	E 5	3506	C 5	6413	D 3
1424	I 12	2513	E 5	3507	B 4	6414	C 3
1425	A 13	2514	C 4	3508	B 4	6415	D 2
1426	A 12	2552	I 9	3516	A 3	6416	C 4
1427	I 10	2553	I 9	3517	A 3	6418	B 12
1428	I 13	2554	I 5	3526	D 5	6419	B 12
1429	I 10	2555	I 5	3528	B 2	6420	F 12
1430	I 11	2556	D 13	3530	A 3	6421	F 12
1431	I 12	2557	D 13	3531	A 3	6422	C 11
1432	I 13	2558	C 12	3532	A 3	6423	C 11
1433	F 10	3401	A 1	3533	A 3	6424	C 11
1434	B 11	3402	A 1	3534	A 3	6425	C 11
1435	B 11	3403	A 1	3535	A 3	6427	A 12
1436	B 3	3404	A 1	3536	A 2	6428	C 9
1437	F 4	3405	C 1	3537	B 4	6431	F 5
1438	F 2	3406	C 1	3538	B 4	6442	D 2
1439	E 1	3407	C 1	3539	A 4	6450	C 9
1440	F 1	3408	C 1	3540	E 6	6453	F 7
1441	I 1	3409	D 2	3552	F 4	6455	D 1
1442	I 3	3410	D 2	3554	A 13	6456	E 1
1443	I 3	3413	B 1	3555	A 12	7403	C 12
1444	F 3	3414	B 1	3556	A 13	7406	F 6
1446	I 1	3415	I 9	3557	A 13	7407	E 2
1447	I 2	3416	I 8	3558	B 11	7408	F 8
1448	B 3	3417	D 3	3559	B 11	7409	F 7
2401	A 2	3418	C 3	3560	B 11	7410	F 7
2402	A 2	3419	D 4	3562	D 5	7411	F 7
2403	D 3	3420	C 2	3563	D 5	7412	F 6
2404	B 2	3421	D 3	3564	A 11	7413	F 8
2405	D 4	3422	C 3	3565	A 2	7418	C 4
2406	B 2	3423	D 2	3568	B 9	7419	E 4
2407	D 2	3424	C 3	3572	A 11	7420	B 11
2408	B 2	3425	D 4	3573	F 9	7421	D 5
2409	C 2	3426	C 4	3574	F 9	7422	B 1
2410	B 3	3427	F 2	3575	F 9	7423	D 9
2411	C 3	3428	E 3	3576	F 11	7424	D 9
2412	B 2	3431	F 2	3577	E 9	7425	E 5
2413	C 4	3432	F 3	3578	F 9	7426	A 11
2414	B 2	3433	F 1	3579	F 10	7427	D 5
2415	C 3	3434	F 2	3580	E 10	7432	D 9
2416	B 3	3435	E 2	3581	E 10	7433	E 10
2417	C 4	3436	E 3	3585	B 4	7440	E 9
2418	B 3	3437	D 2	3586	C 5	7445	C 2
2419	F 2	3438	D 2	3587	F 5	7446	B 2
2420	E 3	3439	D 12	3589	B 11	7447	I 9
2421	E 2	3440	D 12	3590	D 4	7448	I 9
2422	F 3	3441	C 13	3591	B 11	8400	D 7
2423	B 2	3442	C 13	3592	D 4		
2424	B 4	3443	D 13	3593	B 11		
2425	F 2	3444	D 13	3594	B 5		
2426	F 3	3445	D 12	3595	B 5		
2427	E 2	3446	D 13	3596	B 5		
2428	E 3	3447	D 12	3597	B 5		
2429	E 13	3448	D 12	3598	A 2		
2430	E 13	3449	D 11	3601	E 2		
2431	D 12	3450	D 11	3602	F 3		
2432	E 13	3451	D 11	3603	F 2		
2433	D 12	3452	D 11	3604	F 3		
2434	D 13	3455	E 10	3605	C 1		
2435	D 12	3456	E 11	3606	C 1		
2436	D 12	3457	E 11	3607	C 2		
2437	D 12	3458	E 11	3608	C 2		
2438	D 12	3459	E 12	3609	D 2		
2439	D 11	3460	E 12	3610	D 10		
2440	D 11	3461	E 12	3612	B 5		
2441	D 11	3462	E 13	3613	C 7		
2442	D 11	3463	C 11	3615	A 2		
2443	E 10	3464	D 12	3616	E 7		
2444	E 11	3465	C 12	3617	G 7		
2445	D 11	3466	C 12	3618	F 6		
2446	D 10	3469	C 12	3620	B 6		
2447	C 4	3470	B 12	3621	E 1		
2448	C 4	3471	E 13	3622	D 1		
2449	C 13	3472	E 13	3623	E 2		
2450	C 12	3473	C 13	3624	E 1		
2451	C 11	3474	D 13	3649	H 9		
2452	C 12	3475	F 2	3650	I 9		
2453	D 13	3476	E 3	3651	H 10		
2454	B 13	3477	F 8	3652	I 9		
2455	C 11	3478	F 7	3653	H 8		
2456	C 12	3480	D 7	3654	I 8		
2460	D 3	3481	D 13	3655	I 9		
2461	D 3	3482	D 12	3660	I 9		
2462	D 4	3483	D 12	3661	I 9		

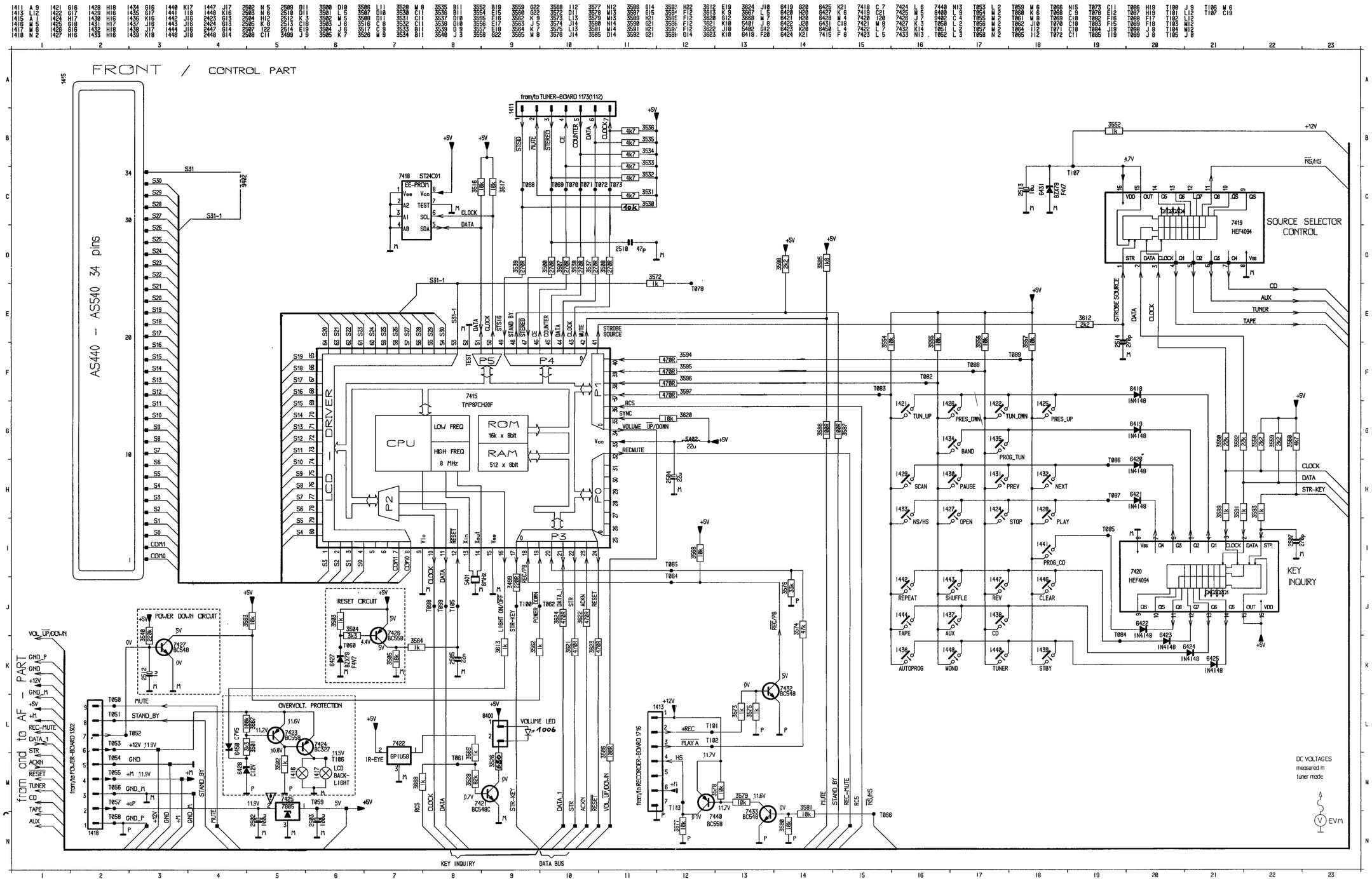
FRONT / CONTROL PART
AS440 - AS540 34 pins
from/to TUNER-BOARD 1173(1112)
7418 ST24C01
EE-PROM
CLOCK
DATA
LCD - DRIVER
7415
TMP87CH20F
CPU
LOW FREQ
HIGH FREQ
8 MHz
ROM
16k x 8bit
RAM
512 x 8bit
SOURCE SELECTOR CONTROL
7419
HEF4094
KEY INQUIRY
7420
HEF4094
POWER DOWN CIRCUIT
RESET CIRCUIT
OVERVOLT. PROTECTION
LCD BACK-LIGHT
VOLUME LED
IR-EYE
from and to AF - PART
from/to POWER-BOARD 1302
from/to RECORDER-BOARD 1776
KEY INQUIRY
DATA BUS
DC VOLTAGES
measured in
tuner mode
EVM

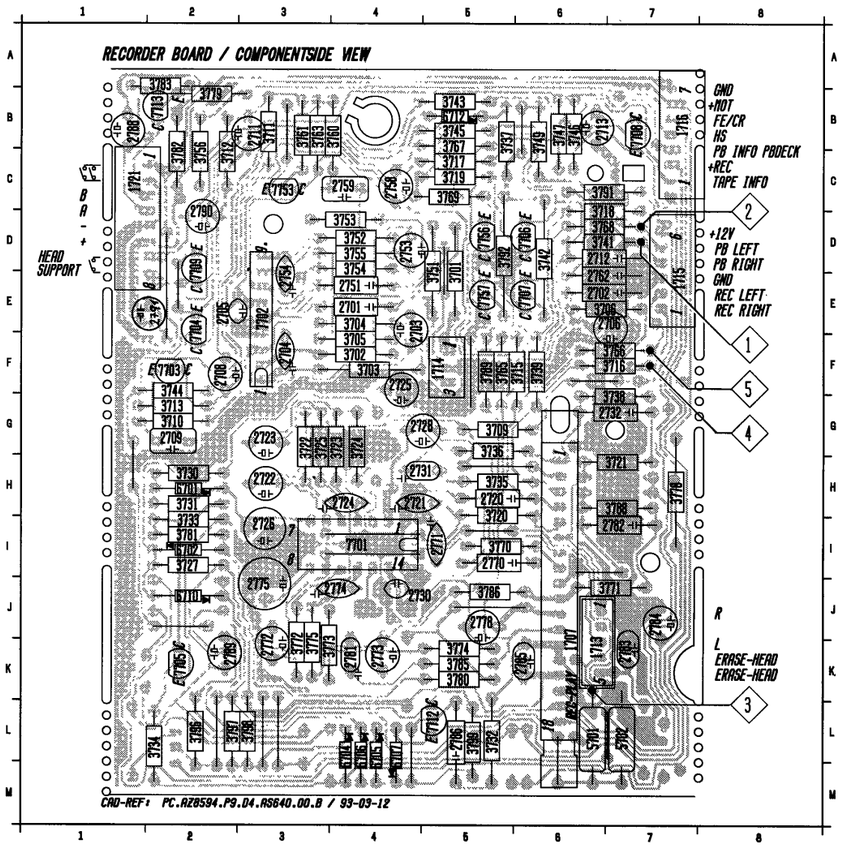

1707 J6	3711 B3	3783 A2	2754 E3	3746 B6	7712 L5
1713 K6	3712 C2	3785 K5	2758 C4	3747 B6	7713 B2
1714 F5	3713 G2	3786 J5	2759 C4	3749 B6	7753 C3
1715 E7	3715 F6	3788 H7	2762 E6	3751 D5	7756 D5
1716 B7	3716 F7	3789 F5	2770 I5	3752 D4	7757 E5
1721 C1	3717 C5	3791 C6	2771 I5	3753 D4	9701 L7
2701 E4	3718 D6	3792 D5	2772 K3	3754 D4	9702 L6
2702 E6	3719 C5	3796 L2	2773 K4	3755 D4	9705 L4
2703 E4	3720 H5	3797 L2	2774 J4	3756 C2	9706 J2
2704 F3	3721 H7	3798 L3	2775 J3	3760 B4	9707 H1
2705 E2	3722 G3	3799 L5	2778 J5	3761 B3	9708 D5
2706 E7	3723 G4	5701 L6	2781 K4	3763 B3	9709 E2
2708 F2	3724 G4	5702 L7	2782 I7	3765 F5	9711 J5
2709 G2	3725 G3	6701 H2	2783 K7	3766 F7	9712 I6
2711 B3	3727 I2	6702 I2	2784 J7	3767 B5	9713 I5
2712 D6	3730 H2	6704 L4	2785 K6	3768 D6	9714 I4
2713 B6	3731 H2	6705 L4	2786 L5	3769 C5	9715 I4
2720 H5	3732 L5	6706 L4	2788 B1	3770 I5	9716 H5
2721 H4	3733 I2	6707 L4	2789 K2	3771 J7	9717 B3
2722 H3	3734 L2	6710 J2	2790 D2	3772 K3	9722 F5
2723 G3	3735 H5	6712 B5	3701 D5	3773 K3	9723 F6
2724 H4	3736 G5	7701 I4	3702 F4	3774 K5	9727 L3
2725 F4	3737 B5	7702 E3	3703 F4	3775 K3	9731 E2
2726 I3	3738 G7	7703 F2	3704 E4	3778 H7	9732 L2
2728 G5	3739 F6	7704 E2	3705 F4	3779 B2	9733 L3
2730 J4	3741 D6	7705 K2	3706 E6	3780 K5	9741 B6
2731 H5	3742 D6	7706 D6	3709 G5	3781 I2	2744 E
2732 G7	3743 B5	7707 E6	3710 G2	3782 C2	
2751 E4	3744 F2	7708 B7			
2753 D4	3745 B5	7709 D2			
		7712 L5			

RECORDER ADJUSTMENT TABLE

Adjustment	Cassette/Source	Recorde mode	Measure on	Read on	Adjust with	Adjust to
Azimuth [1]	SBC 420 8kHz	PLAY A-Deck PLAY B-Deck	1 2 or Phone socket	mV - meter	left-hand screw	maximum output left = right
Motor speed [2] Normal speed High speed [4]	SBC 420 3150Hz	PLAY A + B-Deck HS-Dubbing	1 2 or Phone socket	Wow and Flutter meter or Counter Counter	pot on motor check only	0±1% 5556-5783Hz

CHECK ONLY

Check	Cassette/Source	Recorder mode	Measure on	Read on	Check if
Wow and Flutter	SBC 420 3150Hz	PLAY A or B-Deck PLAY A and B-Deck	1 2 or Phone socket	Wow and Flutter meter	≤ 0,3% weighted ≤ 0,35% weighted
Erase Oscillator Voltage Frequency	any	REC A-deck	3 Erase head	mV - meter Counter	Cr ≥ 9,8Vrms Fe ≥ 20,8 Vrms f = 60kHz ± 5kHz
Playback level [3]	SBC420 315Hz 0dB level	PLAY A-Deck[5] PLAY B-Deck[5]	1 2	mV - meter	41 mV - 57 mV 41 mV - 57 mV
Fequency reponse Playback Overall	SBC420 Level = 0,5mV 4 5	PLAY A or B-Deck[5] REC A-Deck[5] PLAY A-Deck[5]	1 2 1 2	mV - meter mV - meter	125 Hz - 10 kHz within 8dB 125 Hz - 10 kHz within 8dB 125 Hz - 8 kHz dubbing
Distortion	SBC 420 Level = 10mV 4 5	REC A-Deck[5] PLAY A-Deck[5]	1 2	mV - meter	50 mV ± 10 mV, D ≤ 5%

SBC 420 Service code: 4822 397 30071

1) For Azimuth adjustment set need not to be dismantled. Remove ornamental part of cassette door and put screwdriver (torx5) through holes of cassette door.
2) Absolute difference between deck A and deck B have to be ≤2%.
3) Noise level in "PAUSE" should be 80 - 180µV (A-weighted).
4) Insert SBC420 in A-Deck and use High speed dubbing mode to check frequency.
5) Recorder has to be in Fe- Mode

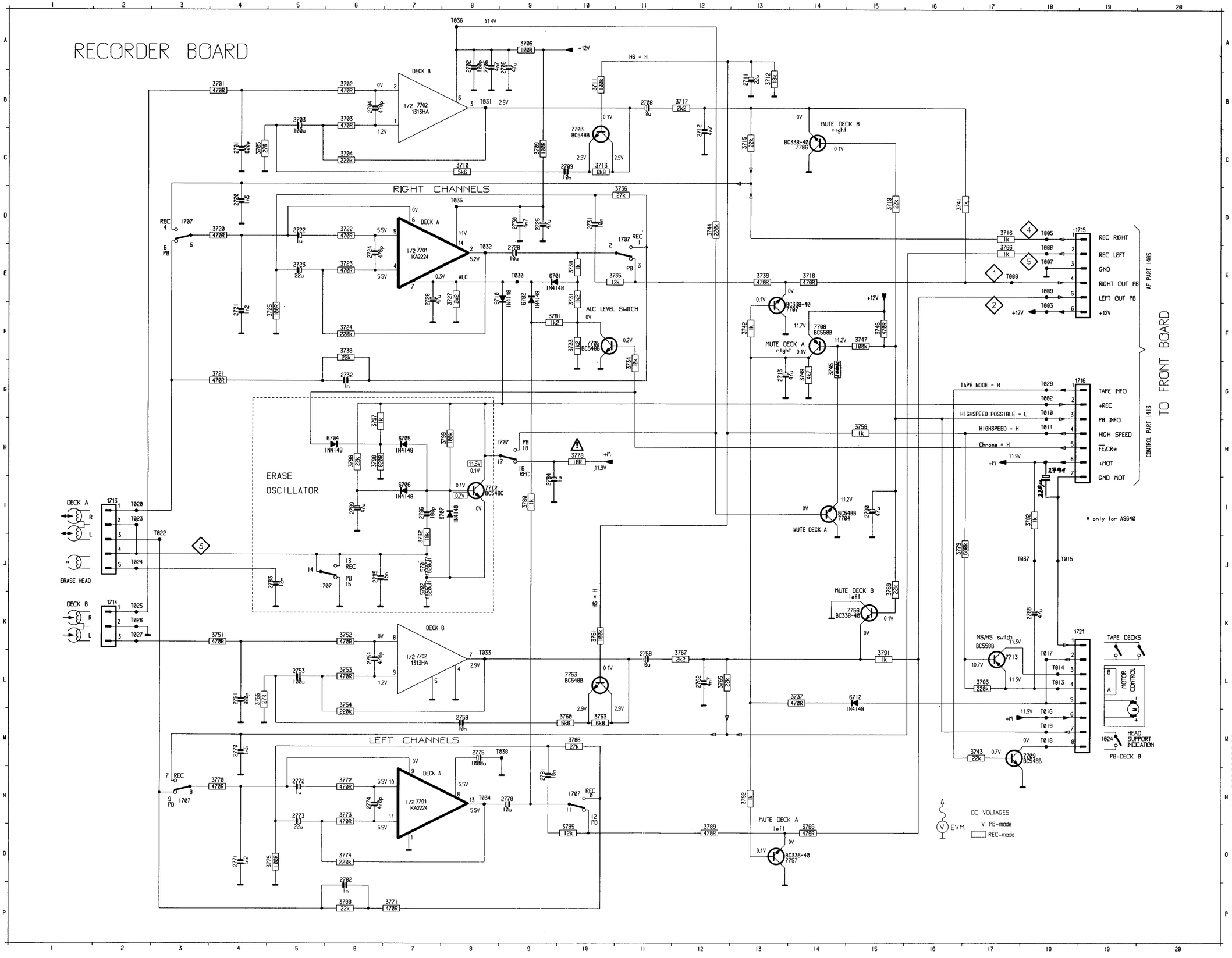
RECORDER BOARD
RIGHT CHANNELS
LEFT CHANNELS
ERASE OSCILLATOR
ALC LEVEL SWITCH
DECK A
DECK B
1/2 7702 1313HA
1/2 7701 KA2224
MUTE DECK A
MUTE DECK B
right
left
NS/HS switch
ERASE HEAD
TAPE DECKS
MOTOR CONTROL
HEAD SUPPORT INDICATION
PB-DECK B
REC RIGHT
REC LEFT
GND
RIGHT OUT PB
LEFT OUT PB
+12V
TAPE INFO
+REC
PB INFO
HIGH SPEED
FE/CR*
+MOT
GND MOT
TAPE MODE = H
HIGHSPEED POSSIBLE = L
HIGHSPEED = H
Chrome = H
HS = H
* only for AS640
TO FRONT BOARD
AF PART 1405
CONTROL PART 1413
DC VOLTAGES
V PB-mode
REC-mode
EVM

FOR ALL TRANSISTORS

* NOT USED COMPONENTS

o FOR SURROUND ONLY

POWER BOARD / Component side view

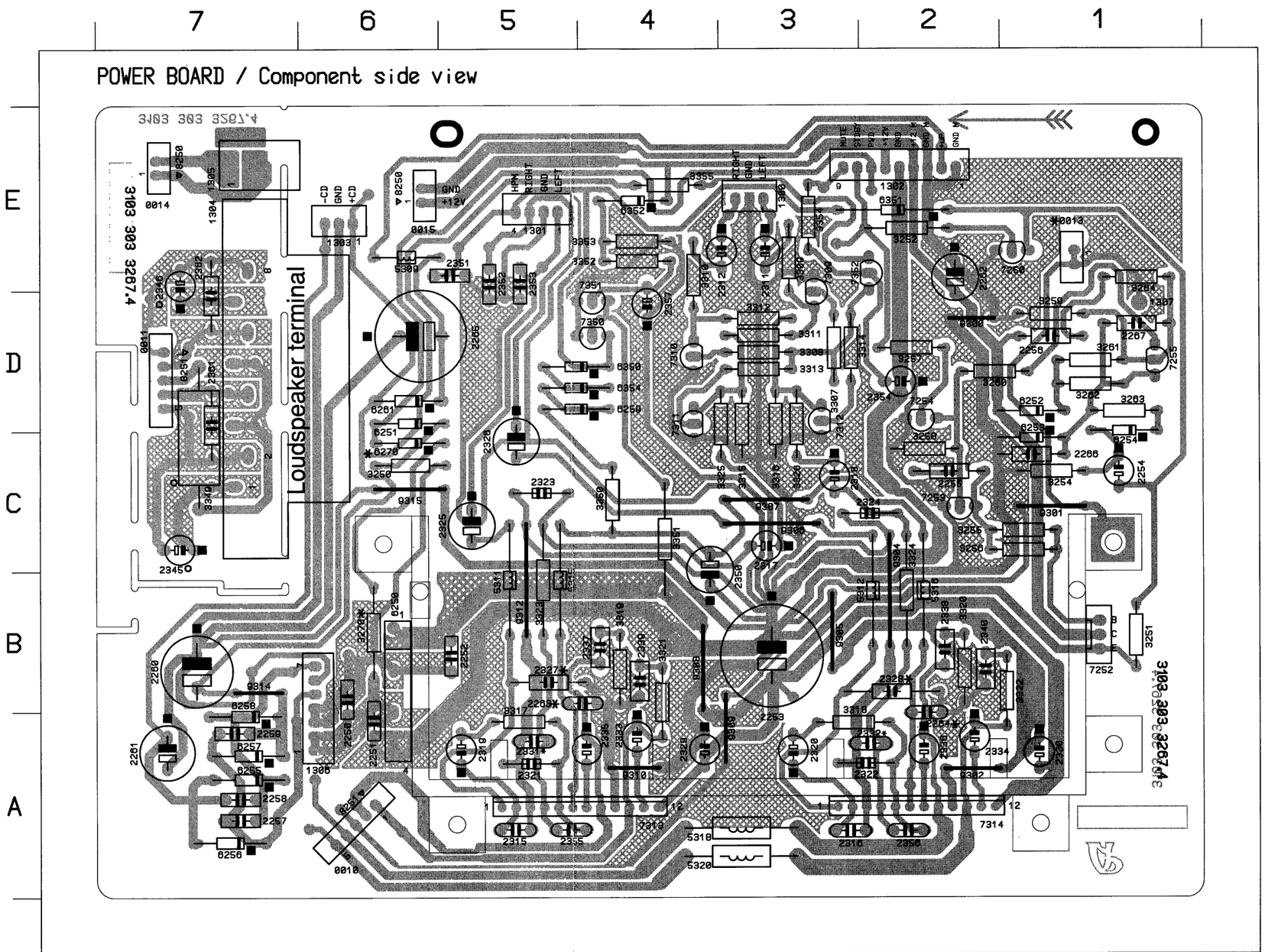

	9304 B 2	7310 D 4	6270 C 6	6250 B 6	3352 E 4	3319 B 4	3308 D 3	3256 C 1	2354 D 2	2330 A 2	2325 C 5	2312 E 3	2258 A 7	1305 E 7
	9302 A 2	7309 D 3	6261 D 6	5320 A 3	3351 C 4	3318 A 3	3307 D 3	3255 C 1	2353 E 5	2335 A 4	2324 C 2	2311 E 3	2257 A 7	1304 D 7
9315 C 6	9301 C 1	7255 D 1	6259 D 5	5318 A 3	3350 C 4	3317 A 5	3270 B 6	3254 C 1	2352 E 5	2334 A 2	2323 C 5	2267 D 1	2256 D 1	1303 E 6
9314 B 7	9300 D 2	7254 D 2	6258 A 7	5316 B 2	3349 C 7	3316 D 3	3264 E 1	3252 E 2	2351 E 5	2333 A 4	2322 A 2	2266 C 1	2255 C 2	1302 E 2
9312 B 5	7352 E 2	7253 C 2	6257 A 7	5315 B 5	3326 D 3	3315 D 3	3263 D 1	3251 B 1	2350 C 4	2332* A 2	2321 A 5	2265 D 6	2254 C 1	1301 E 5
9310 A 4	7351 D 4	7252 B 1	6256 A 7	5312 B 2	3325 D 3	3314 D 3	3262 D 1	3250 C 6	2346 E 7	2331* A 5	2320 A 3	2264 A 2	2253 B 3	1300 E 3
9309 A 3	7350 D 4	7250 E 1	6255 A 7	5311 B 5	3324 B 2	3313 D 3	3261 D 1	2362 D 7	2345 C 7	2330 A 1	2319 A 5	2263 B 4	2252 B 5	0015 E 6
9308 B 4	7314 A 2	6354 D 5	6254 D 1	5309 E 6	3323 B 5	3312 D 3	3260 D 2	2361 D 7	2340 B 2	2329 A 4	2318 C 3	2262 E 2	2251 A 6	0014 E 7
9307 C 3	7313 A 5	6352 E 4	6253 C 1	3355 E 4	3322 B 1	3311 D 3	3259 D 1	2357 D 4	2339 B 4	2328 B 2	2317 C 3	2261 A 7	2250 B 6	0013 E 1
9306 C 3	7312 D 3	6351 E 2	6252 D 1	3354 E 3	3321 B 4	3310 E 4	3258 C 2	2356 A 2	2338 B 2	2327 B 5	2316 A 3	2260 B 7	1307 E 1	0011 D 7
9305 B 3	7311 D 4	6350 D 5	6251 D 6	3353 E 4	3320 B 2	3309 E 3	3257 D 2	2355 A 5	2337 B 4	2326 C 5	2315 A 5	2259 A 7	1306 B 6	0010 A 6

TRANSFORMER BOARD

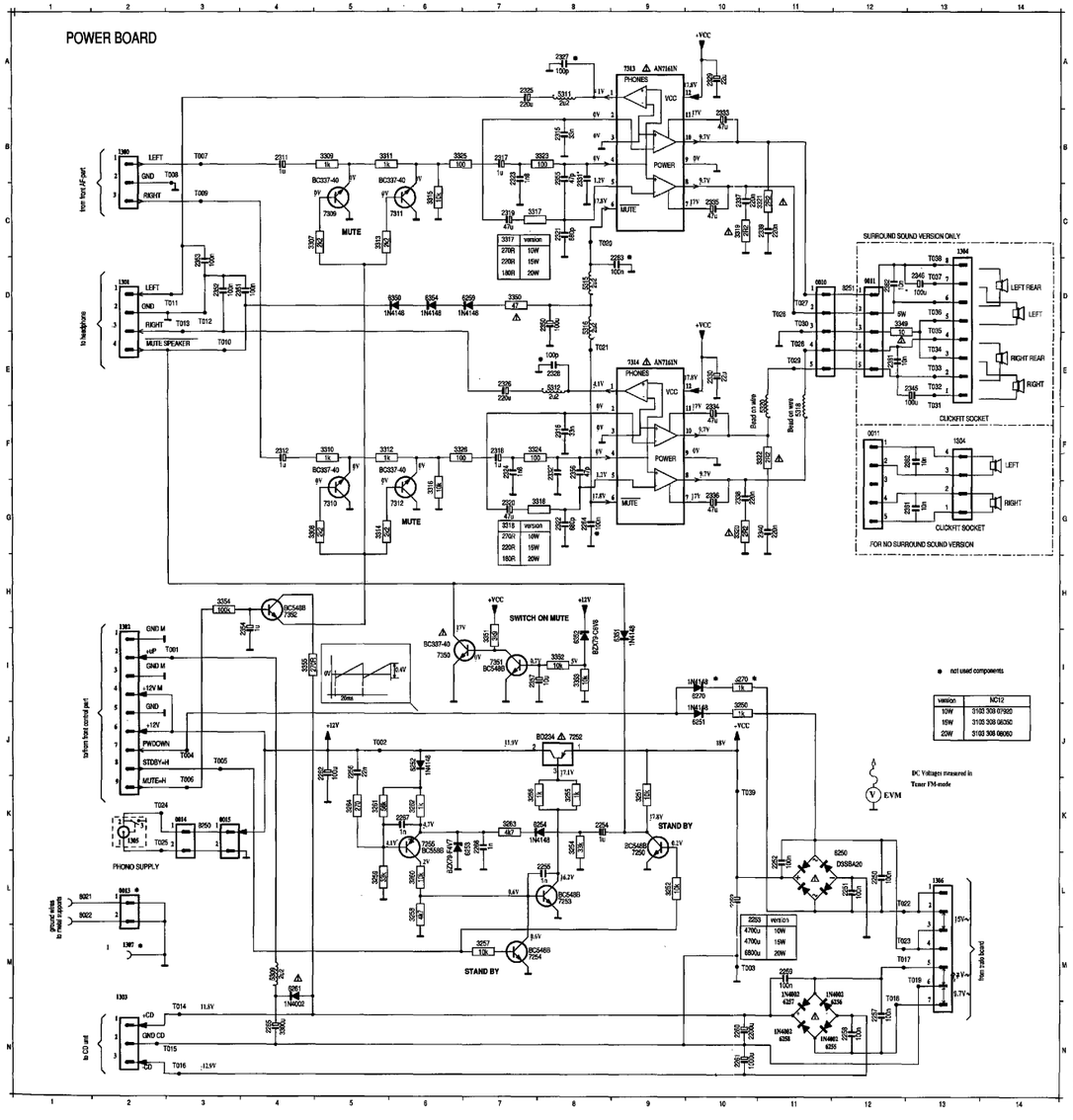

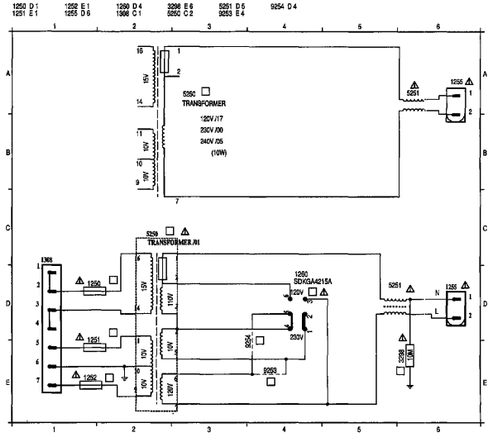

COMPONENTS DEPENDING ON THE VERSION

VERSION \ COMPONENTS	1250	5253	5254	5250	3298	VALUE OF FUSE 1250 (1254)	1251 (1253)	1252 (1255)
/00 (IEC 230V)				/00		5A	630mA	630mA
/00[1] (240V)		X		/01		5A	630mA	630mA
/17 (UL 120V)				/17	X	6.3A	1.25A	1.25A
/01 /10 (120V,230V)	X		X	/01		5A	630mA	630mA
/05[1] (240V)				/05		5A	630mA	630mA

1) for 15V and 20V versions /01 transformer
for 18V version /05 transformer

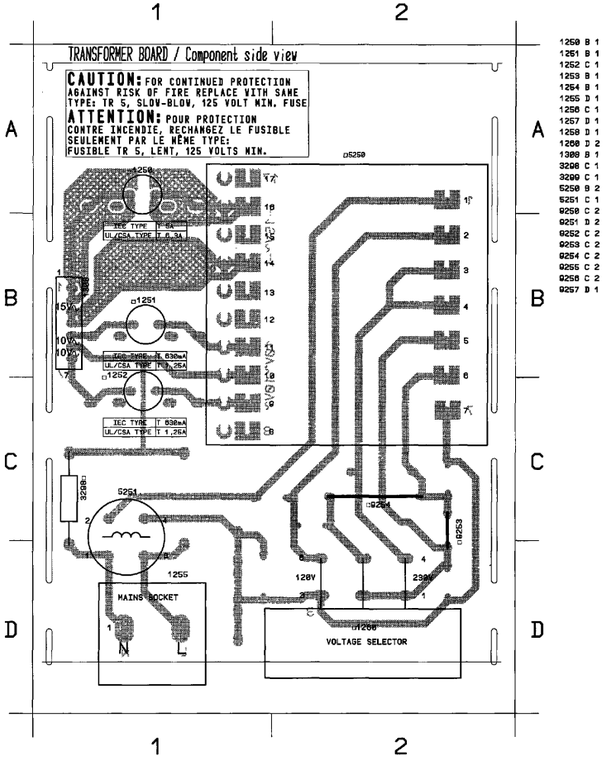

TUNER UNIT EC04 < MIDI >

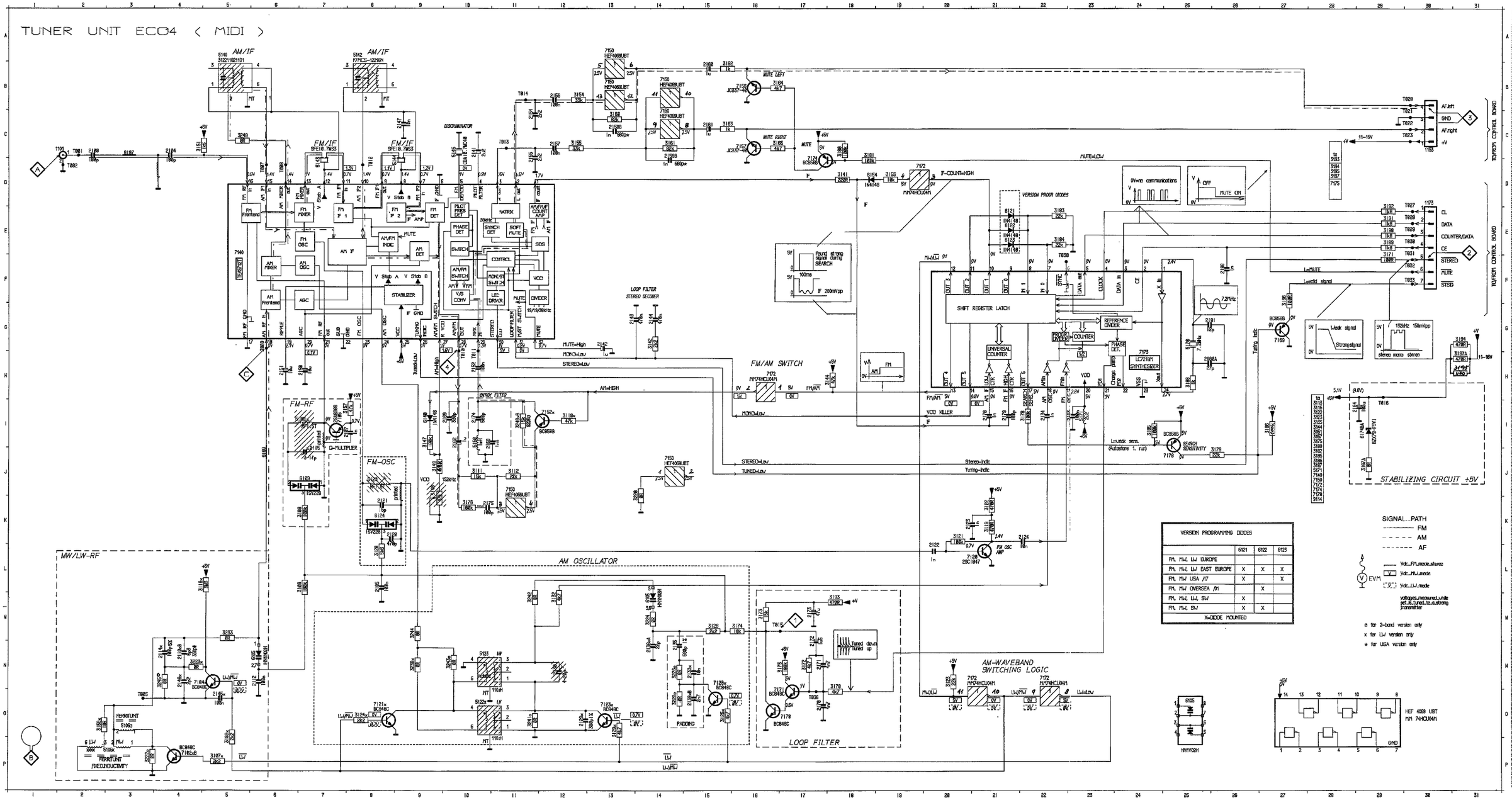

1101 B 1	2134 C 6	2161 E 4	3120 B 3	3154 E 4	3191 D 6	5120 C 3	5170 D 6	7120 C 4	9109 D 4	9126 B 4
1153 E 5	2135 B 4	2162 D 3	3124x B 6	3155 E 4	3192 D 6	5122x B 5	5171 D 5	7150 E 4	9110 E 5	9128 D 4
1173 E 6	2141 D 2	2172 C 6	3132 B 5	3170 C 6	3193 E 6	5123 B 5	5121 D 5	7157 E 4	9115 D 5	9120 C 4
2100 A 1	2142 C 4	2173 C 6	3141 D 3	3173 C 6	3194 D 4	5140 D 2	5122 D 5	9100 E 5	9119 C 5	9130 D 4
2104 C 1	2150 C 2	2177x C 6	3148 C 3	3174 C 5	3195 D 4	5142 D 3	5123 D 6	9101 E 5	9120 C 2	9132 C 3
2115 C 2	2151 C 2	2176 C 4	3151 D 1	3177x A 6	3197 E 4	5143 D 2	5140 D 4	9103 C 6	9122 B 4	9134 B 2
2124 C 4	2156 D 3	2179 C 4	3152 C 4	3181 D 5	5105x A 4	5144 D 2	5154 C 4	9105 C 4	9123 B 4	9107 C 1
2129x B 6	2157 E 3	2184 D 5	3162 E 4	3189 D 6	5100o A 4	5145 D 3	5174 D 4	9106 C 4	9124 E 1	9109 B 3
2130 B 5	2160 E 3	3119 C 4	3163 E 4	3190 D 6	5100 C 2	5159 D 3	7105 C 2	9107 C 5	9125 C 2	

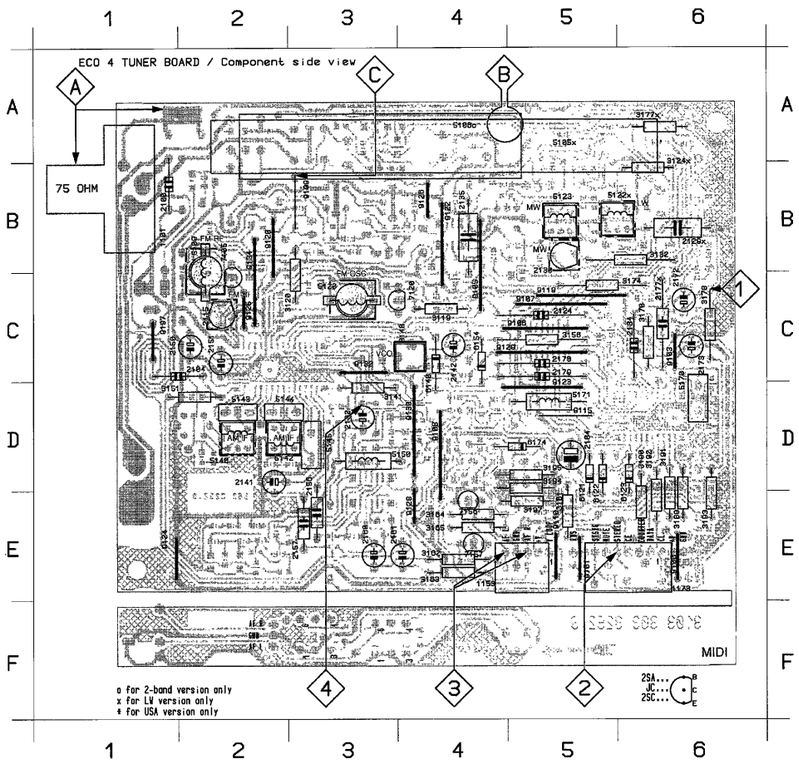

7171 C 5	5109 C 2	3238x B 5	3211 C 6	3171 E 5	3142 C 4	3188 B 2	2159 D 3	2139x B 4	T036 D 6	T015 A 6	T001 B 1
7172 C 5	6124 C 3	3240 E 5	3212 C 5	3172 C 6	3144 C 5	3180x A 5	2170 C 6	2143 C 3	T038 D 6	T020 E 4	T002 B 1
7173 D 5	7182x A 3	3241o B 6	3213 D 5	3175 C 6	3147 C 4	3110x D 4	2171 B 6	2144 C 4	2107 B 2	T021 E 4	T005 E 1
7174 E 5	7184x A 3	3242 B 5	3228 E 2	3176 D 3	3149 C 3	3111 D 3	2174 D 3	2145x A 3	2110o B 3	T022 E 5	T007 B 2
7178 C 5	7121x B 6	3243o B 5	3222o A 4	3178 C 6	3154 E 3	3112 D 3	2175 D 3	2146x A 3	2112 B 4	T023 D 5	T008 B 2
7179x B 6	7123x B 6	3244 B 4	3223x A 3	3170 C 5	3155 E 3	3110x A 3	2100 D 6	2147 D 3	2114x B 3	T027 E 6	T009 B 2
	7129x B 4	3245x A 3	3224 B 4	3100 E 5	3157 B 2	3121 C 4	2101 D 6	2152 D 3	2120 C 3	T029 E 6	T010 B 3
	7148 C 2	3246 C 2	3220o B 4	3103 D 5	3160x A 4	3122 C 4	2103 C 6	2154 D 3	2121 C 2	T029 E 6	T011 C 3
	7150 D 3	3247 B 2	3228 D 5	3104 D 6	3108 E 3	3123 D 5	2105 B 3	2155 D 3	2122 C 3	T030 E 6	T012 B 2
	7152x D 4	3248 D 2	3229o B 4	3105 C 5	3161 E 3	3125x B 4	2106 D 6	2158 E 3	2123 C 4	T031 E 6	T013 E 2
	7169 C 6	3249x D 4	3233 B 4	3106 C 5	3166 E 5	3128 B 4	2109 B 4	2159 E 3	2139x B 4	T032 E 5	T014 D 3
	7178 C 6	6105 B 4	3237 B 5	3108 C 6	3167 D 5	3120x B 6	3107x A 5	2160 D 3	2138o C 4	T033 E 5	T015 C 6

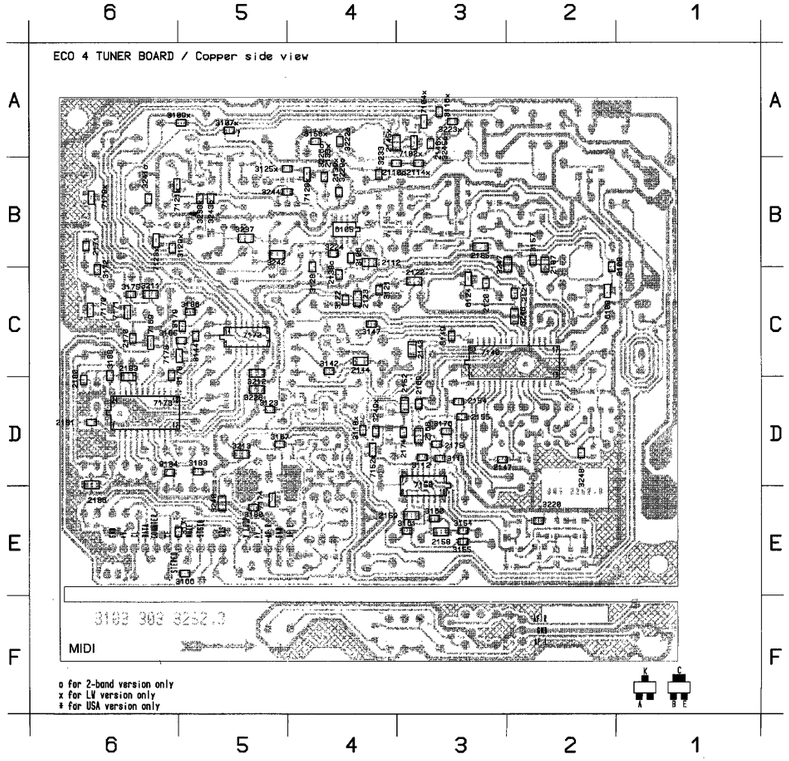

TUNER Adjustment table (ECO 4 FM/MW- and FM/MW/LW - versions with AM-ferrite antenna)

Waverange	Input frequency	Input	Set tuned to	Adjust	Output	Scope / Voltmeter
VARICAP ALIGNMENT * 1)						
FM /00/01/05/10/17			108 MHz	5120		8V ± 0.2V
87.5 - 108MHz			87.5MHz	check		4.1V ± 0.5V
FM /14 East Europe			108 MHz	5120		8V ± 0.2V
65.81 - 108MHz			65.81 MHz	check		0.8V ± 0.4V
MW /01/17 2-band version, 10kHz grid			1710kHz	5123	1	9V±0.1V (7.5±0.7V)[1]
530 - 1710kHz			530kHz	check		1V±0.4V (1.1±0.5V)[1]
LW /00/05/10/14			279kHz	5122		8V±0.2V (7.5±1.5V)[1]
153 - 279kHz			153kHz	check		1V±0.4V (1.1±0.5V)[1]
MW /00/05/10/14			1611kHz	5123		8V±0.1V (7.5±0.5V)[1]
522 - 1611kHz			522kHz	check		1V±0.4V (1.1±0.5V)[1]
FM - RF						
FM /00/01/05/10/17	108MHz	A	108MHz	2115	3	MAX ↕
	87.5MHz		87.5MHz	5109		
FM /14 East Europe	108MHz	mod=1kHz Δf=22.5kHz	108MHz	2115		
	65.81MHz		65.81MHz	5109		
VCO						
FM	98 MHz, 1mV continuous wave	A	98MHz	3148	2	152kHz ± 1kHz
AM - IF						
MW	540kHz Δf = 10kHz as low as possible	100nF 50E C	540kHz	5142 5140	4	symmetrical and max height
AM - RF						
LW	198kHz	B	198kHz	5122	4	MAX
MW /00/05/10/14 3-band version	1494kHz	mod=1kHz 30% AM	1494kHz	2130		MAX ↕
	549kHz		549kHz	5123		
MW /01/17 2-band version	1500kHz		1500kHz	2130		
	550kHz		550kHz	5123		

* Use Service Test Program. By selecting the TUNER TEST, test frequencies will be stored as preset frequ. automatically.

1) Adjustment of AM-RF stage influences the varicap voltage. Therefore check if varicap voltage fulfils value stated within brackets after AM-RF adjustment.

↕ repeat

Dismantling of CD-Player

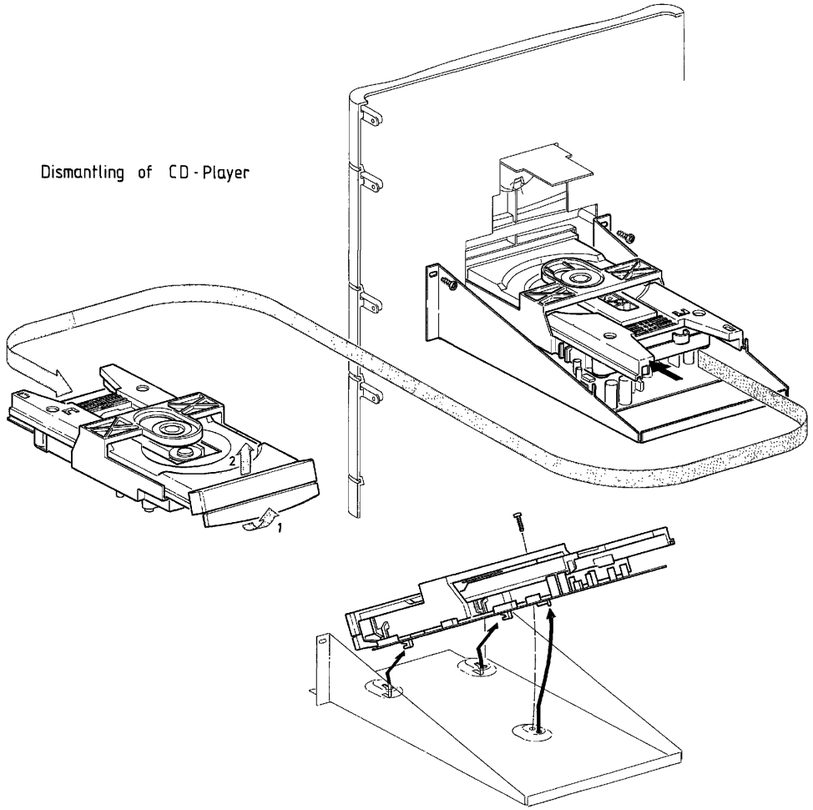

BLOCK DIAGRAM

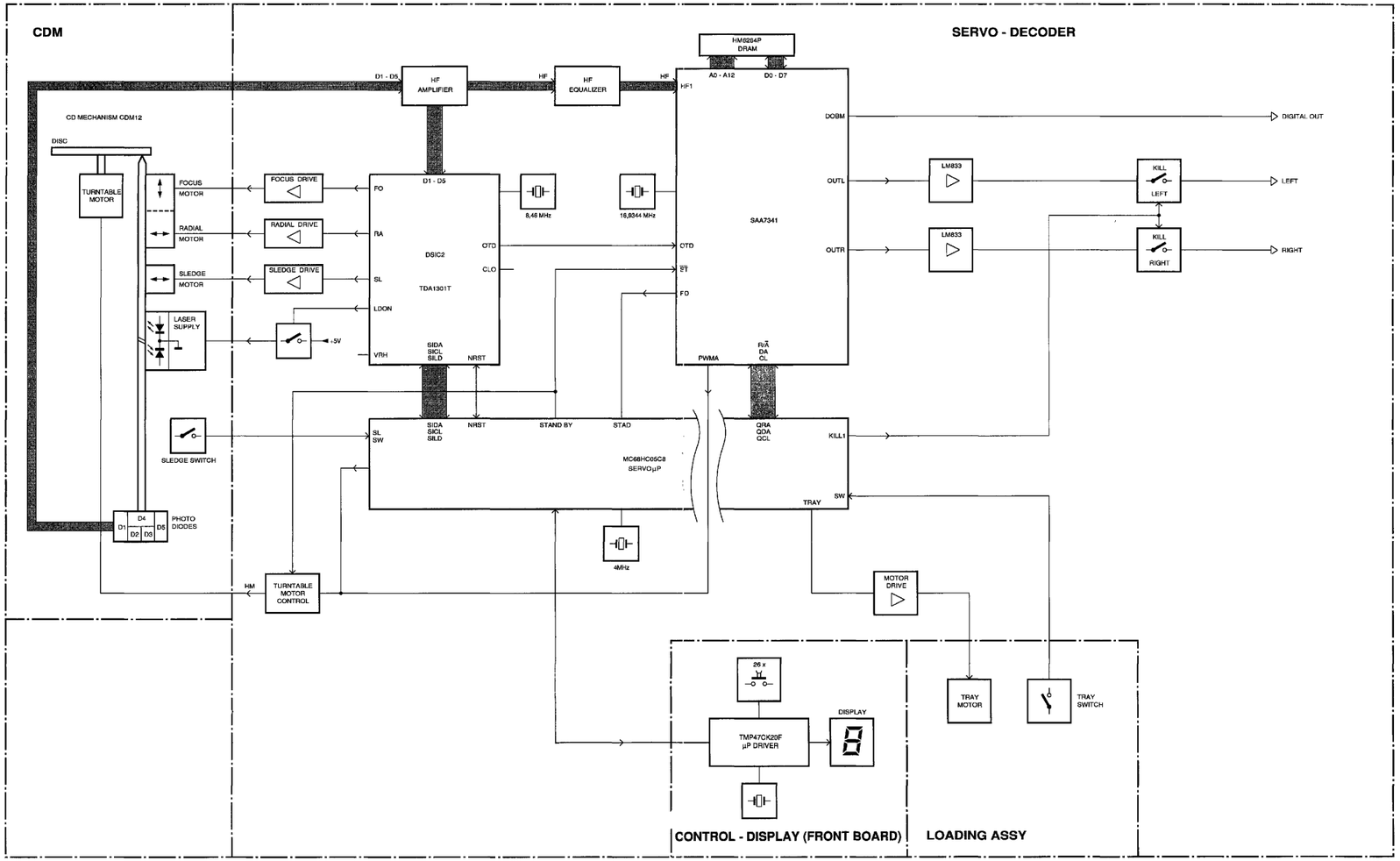

HAS1079
9216

START-UP PROCEDURE

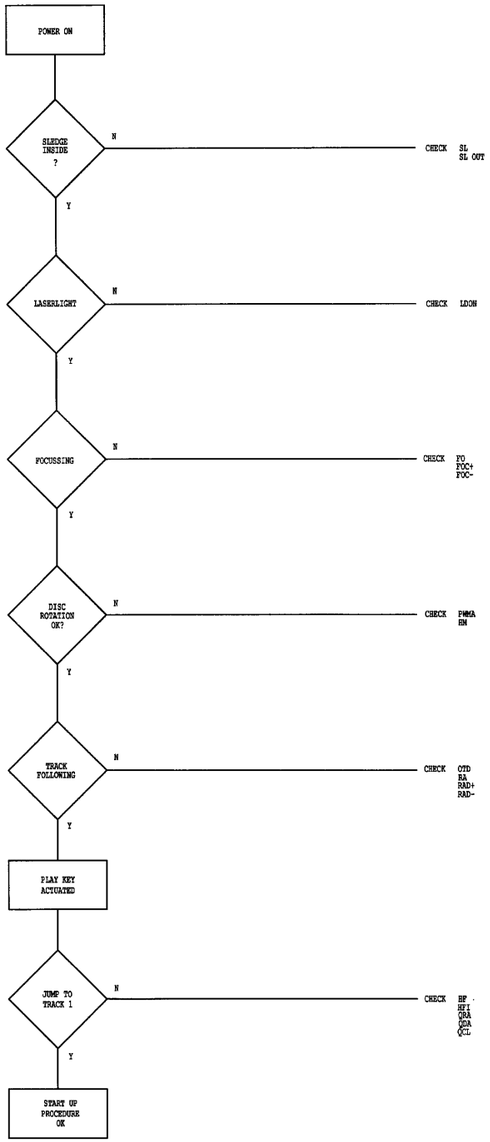

FAULTFINDING TREE

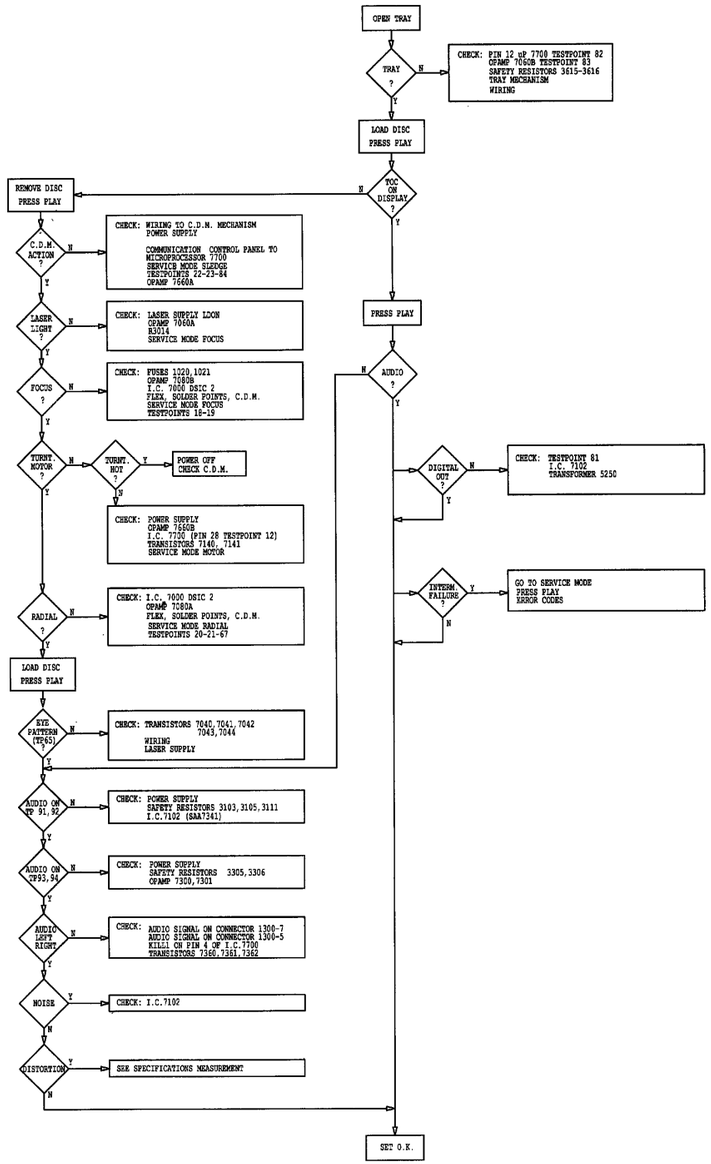

ABBREVIATIONS

A0-A12	: Address outputs to external RAM
AM*	: Additional mute
CFB	: Data slicer feedback output to capacitor
CL	: Microprocessor interface clock input
CLO	: Clock output
D0-D7	: Data inputs/outputs to external RAM
D1-D4	: Central diode signal input
DA	: Microprocessor interface data input/output line
DE1L	: Pin 1 for external de-emphasis capacitor and resistor
DE1R	: Pin 1 for external de-emphasis capacitor and resistor
DE2L	: Pin 2 for external de-emphasis capacitor and resistor
DE2R	: Pin 2 for external de-emphasis capacitor and resistor
DEEM	: Output for external de-emphasis switches
DOBM	: Digital audio output
FO	: Focus actuator output
HFD	: High frequency detector
HFI*	: Inverting data slicer input
HFI	: Non-inverting data slicer input
HM	: Motor control signal
IREF	: Current reference output
KO*	: Kill out
KTC	: Kill time capacitor connection
LDON	: Laser drive on
MACC	: Motor accelerate signal
MBRA	: Motor brake signal
MHAL	: Hall effect detector for motor
NRST	: Reset input
OC	: VCO control
OTD	: Off track detector
OUTL	: Left channel output
OUTR	: Right channel output
PD	: Phase detector
PWMA	: Pulse width modulated motor control acceleration
PWMB	: Pulse width modulated motor brake signal
R/A	: Request/acknowledge
SD1-5	: Photodiode signals
SICL	: Serial interface clock
SIDA	: Serial interface data
SILD	: Serial interface load
SL	: Sledge output
ST*	: Standby mode
TS1-TS2	: Test input
VddA	: Power supply analog part
VddD	: Power supply digital part
VRH	: Reference input for A/D converter
VRL	: Reference input for A/D converter
VssA	: Ground analog part
VssD	: Ground digital part
WE	: Write enable
XIN	: Crystal oscillator input
XOUT	: Output to clock crystal
XTLI	: Oscillator input
XTLO	: Oscillator output
XTLR	: Oscillator reference

* log. 0-active !

CD COMPONENT AND CHIP LAYOUT

| | | |

CD CIRCUIT DIAGRAM

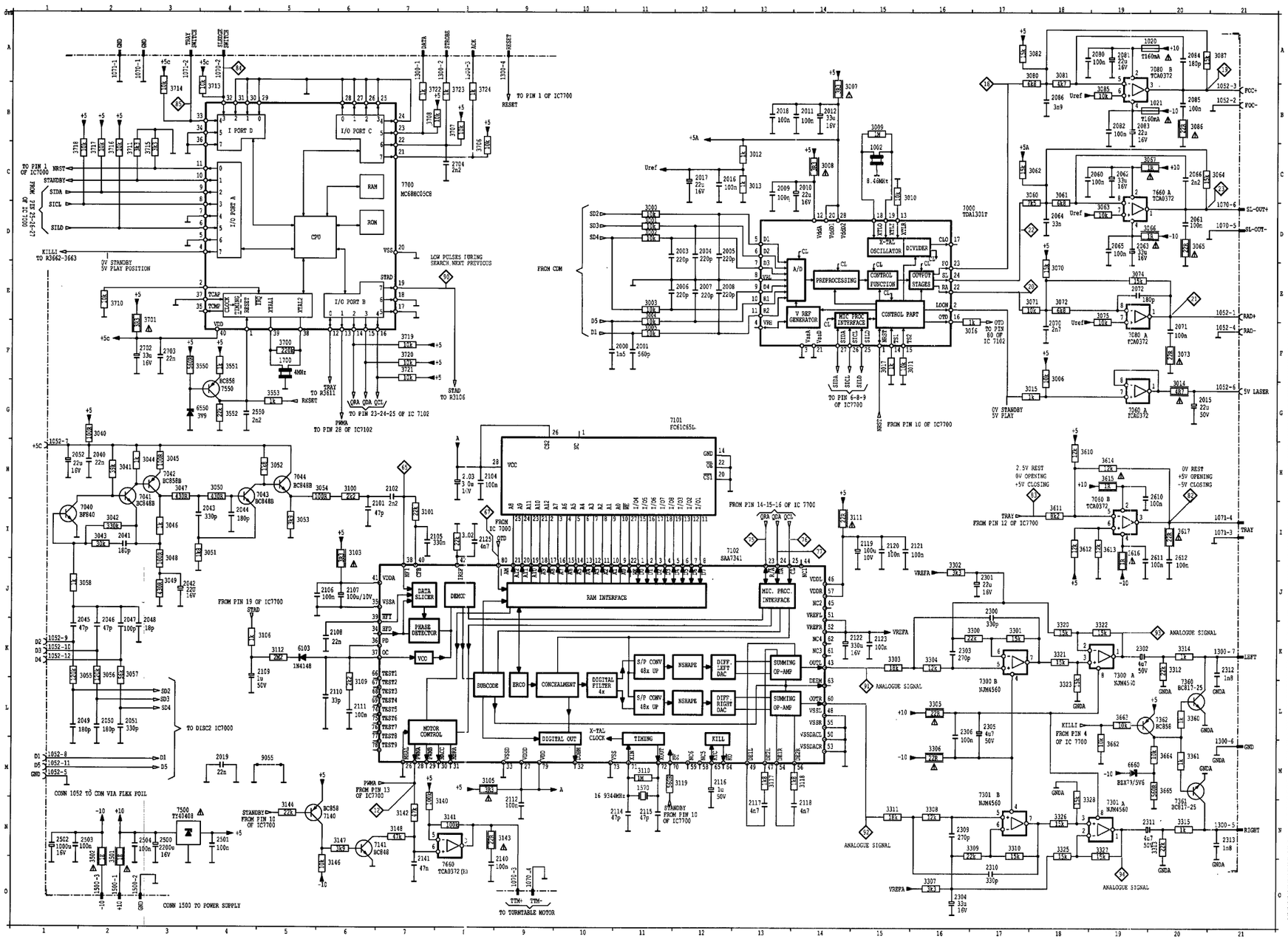
7700
MC68HC05C5E
CPU
RAM
ROM
I/O PORT A
I/O PORT B
I/O PORT C
I PORT D
7000
TDA1301T
X-TAL OSCILLATOR
DIVIDER
A/D
PREPROCESSING
CONTROL FUNCTION
OUTPUT STAGES
V REF GENERATOR
HIGH SPEED INTERFACE
CONTROL PART
7101
FC61C65L
7102
SAA7341
RAM INTERFACE
MIC. PROC. INTERFACE
DATA SLICER
DEMOD
PHASE DETECTOR
VCO
SUBCODE
ERCO
CONCEALMENT
DIGITAL FILTER 4x
S/P CONV 48x UP
NSHAPE
DIFF. LEFT DAC
DIFF. RIGHT DAC
SUMMING OP-AMP
MOTOR CONTROL
DIGITAL OUT
TIMING
KILL
7500
TX40408
7660
TCA0372
7080 B
TCA0372
7080 A
TCA0372
7060 B
TCA0372
7060 A
TCA0372
7300 A
NJM4560
7300 B
NJM4560
7301 A
NJM4560
7301 B
NJM4560
7360
BC817-25
7361
BC817-25
7362
BC858
7040
BF840
7041
BC548B
7042
BC858B
7043
BC848B
7044
BC848B
7140
BC858
7141
BC848
7550
BC856
TO PIN 1 OF IC7700
TO PIN 1 OF IC7000
FROM CDM
TO DISC2 IC7000
CONN 1052 TO CDM VIA FLEX FOIL
CONN 1500 TO POWER SUPPLY
TO TURNTABLE MOTOR
FROM PIN 10 OF IC7700
FROM PIN 14-15-16 OF IC 7700
FROM PIN 12 OF IC7700
FROM PIN 4 OF IC 7700
ANALOGUE SIGNAL
FOC+
FOC-
SL-OUT+
SL-OUT-
RAD+
RAD-
5V LASER
TRAY
LEFT
RIGHT
GND
VREFA
Uref
KILL1
2.5V REST
0V OPENING
+5V CLOSING
0V REST
+5V OPENING
-5V CLOSING
0V STANDBY
5V PLAY POSITION
LOW PULSES DURING SEARCH NEXT PREVIOUS
TO PIN 28 OF IC7102
TO PIN 23-24-25 OF IC 7102
TO PIN 6-8-9 OF IC7700
TO PIN 69 OF IC 7102
TO PIN 13 OF IC7700
TO PIN 10 OF IC7700
TO PIN 19 OF IC7700
TO R3611
TO R3106
TO R3662-3663
TO R3661
TO R3016
TO R3111
TO R3103
TO R3142
TO R3143
TO R3146
TO R3147
TO R3148
TO R3144
TO R3145
TO R3140
TO R3141
TO R3105
TO R3112
TO R3113
TO R3114
TO R3115
TO R3116
TO R3117
TO R3118
TO R3119
TO R3120
TO R3121
TO R3122
TO R3123
TO R3124
TO R3125
TO R3126
TO R3127
TO R3128
TO R3129
TO R3130
TO R3131
TO

WIRING DIAGRAM CD-PART

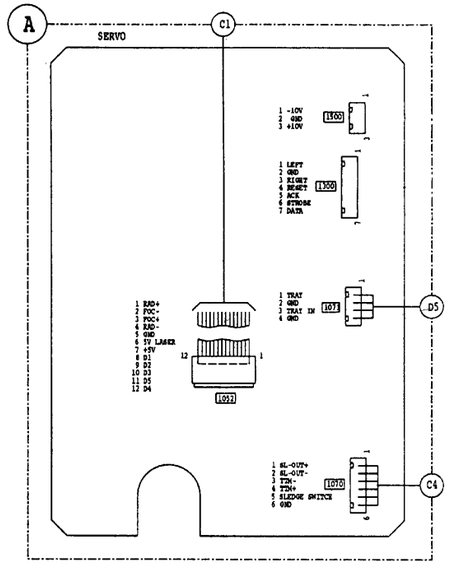

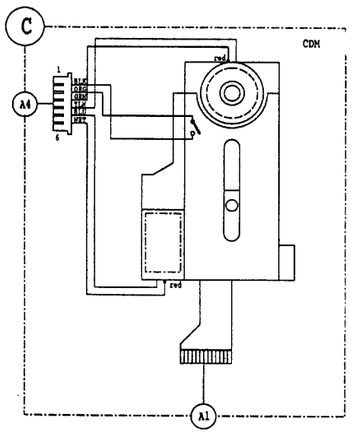

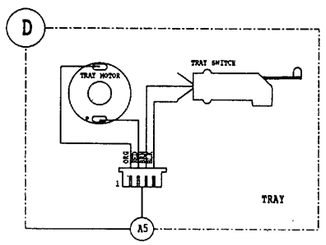

CD MECHANISM

86	4822 528 81464
87	4822 528 81465
88	4822 325 60379
89	4822 276 13222
93	4822 444 60816
96	4822 325 80511
101	4822 444 50679
102	4822 358 31168
103	4822 691 30278
108	4822 402 61412
109	4822 464 50895
110	4822 444 50678
111	4822 361 21492

Note : Only the mentioned parts are normal service parts.

CD EXPLODED VIEW

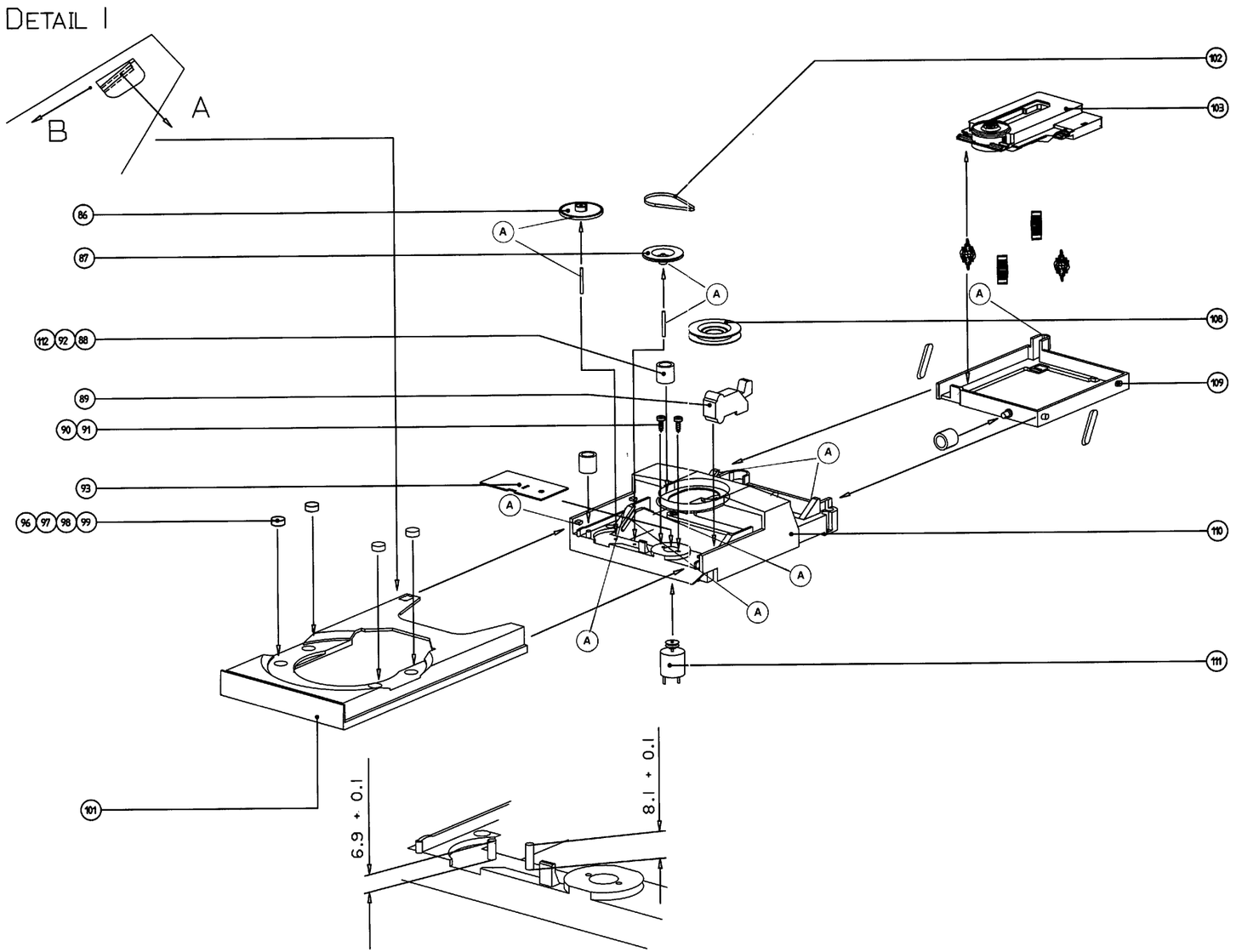

EXPLODED VIEW OF SET I

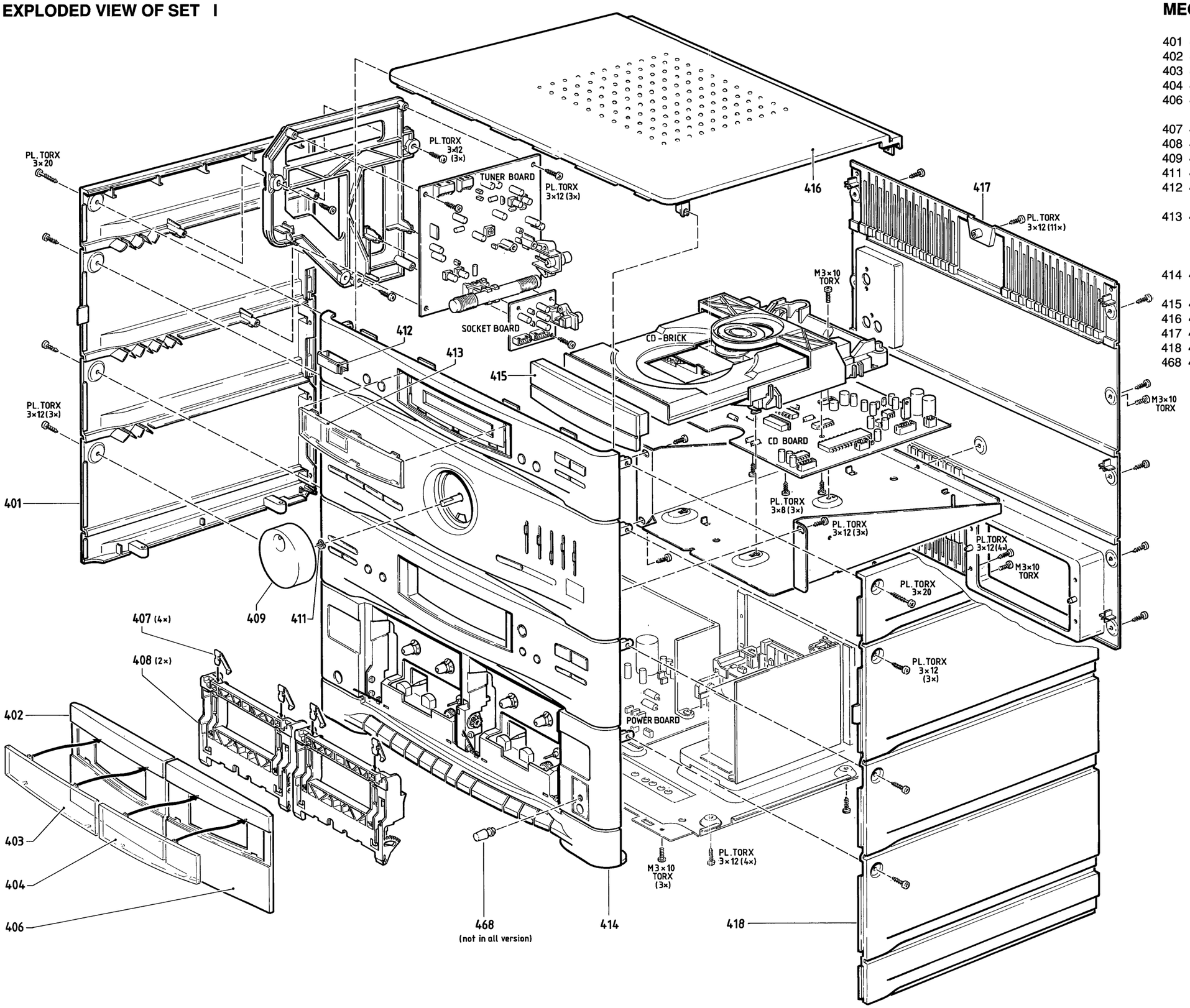

MECHANICAL PARTS

401	4822 426 30153	SIDE LEFT
402	4822 443 63936	CASS. DOOR A-DECK
403	4822 450 62087	WINDOW A-DECK
404	4822 450 62088	WINDOW B-DECK
406	4822 443 63935	CASS. DOOR B-DECK
407	4822 492 63927	SPRING,CASS.PRESS
408	4822 443 63037	DOOR,CASSETTE
409	4822 413 41792	KNOB VOLUME
411	4822 492 51374	SPRING KNOB CLAMP
412	4822 381 11418	IR WINDOW
413	4822 450 62074	WINDOW PRINTED
414	4822 426 51642	
415	4822 444 40661	FRONT CD TRAY
416	4822 426 60639	COVER
417	4822 426 20241	BACK PLATE
418	4822 426 30152	SIDE RIGHT
468	4822 410 62622	KNOB MICRO-MIX

EXPLODED VIEW OF SET II

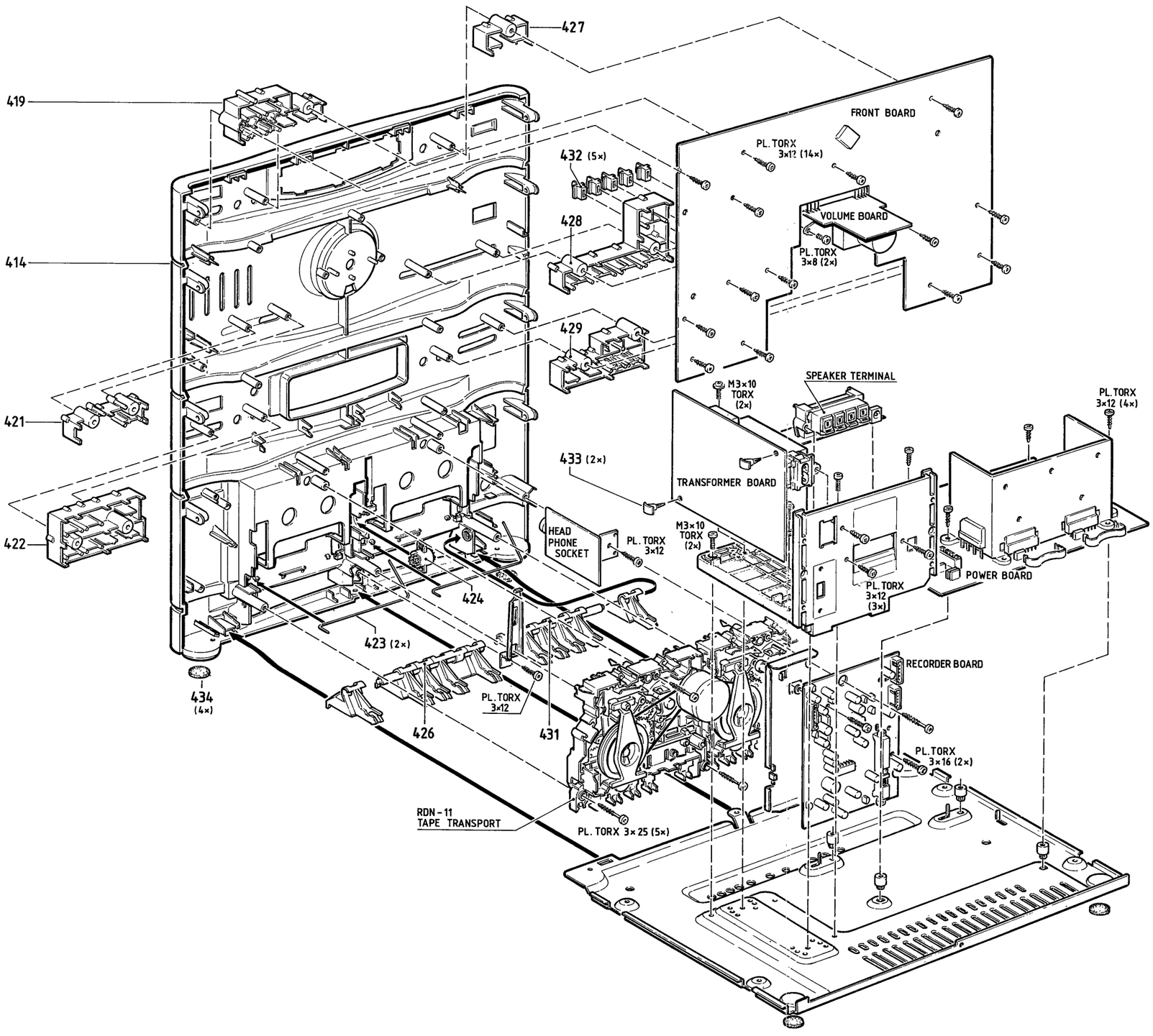

MECHANICAL PARTS

414	4822 426 51642	FRONT
419	4822 410 62618	KNOB PRSET UP/DOWN
421	4822 410 62624	KNOB HSD
422	4822 410 62626	KNOB CD RIGHT
423	4822 492 42595	SPRING CASS. COMPARTMENT
424	4806 691 17018	DAMPER
426	4822 410 62619	BUTTON SET **B**
427	4822 410 62623	KNOB AUTOPROGRAM
428	4822 410 62617	KNOB SELECTOR+POWER
429	4822 410 62625	KNOB CD LEFT
431	4822 410 62621	BUTTON SET **A**
432	4822 411 61929	KNOB EQUALIZER
433	4822 466 93148	SPACER
434	4822 462 40683	FOOT RUBBER

MECANISMO DO DECK RDN11

7/67	4822 520 10718	PLACA SUPORTE DO EXCENTRICO
38	4822 520 40134	EXCENTRICO
40	4822 402 10037	ALAVANCA DIR.P/ ROLO PRESSOR
41	4822 528 70646	ROLO PRESSOR
76	4822 528 70646	ROLO PRESSOR
43	4822 404 10853	ALAVANCA DESLIZANTE
58	4806 358 37088	CORREIA (GRANDE)
98	4806 358 37087	CORREIA (PEQUENA)
101	4806 492 67304	MOLA ESPIRAL
126	4806 492 67304	MOLA ESPIRAL
107	4806 403 17028	AMORT. BORRACHA P/ MOTOR
108	4822 502 11866	PARAFUSO P/ MOTOR
402	4822 528 20676	CONJ. PORTA BOBINA
1021	4822 249 10397	CABEÇA REC/PB
1030	4822 249 10397	CABEÇA REC/PB
1022	4822 404 10685	CABEÇA DUMMY (PLASTICA)
1023	4822 361 21323	MOTOR 9VDc
1024	4806 277 27106	CHAVE P/ IND. "PLAY"
1032	4806 249 27014	CABEÇA APAGADORA

MICRO MIX BOARD

MISCELLANEOUS

1900	4822 267 30968	PHONE SOCKET

INTEGRATED CIRCUITS

7900	4806 209 87373	NJM4560D

RESISTORS

3900		2k2	5%	0,16W
3901		100R	5%	0,5W
3902		470R	5%	0,5W
3903		100k	5%	0,5W
3904		100k	5%	0,5W
3905	4822 100 11869	TRIMPOT 20k LIN.		
3906		100R	5%	0,5W
3907		100k	5%	0,5W
3908		12k	5%	0,5W
3909		10k	5%	0,5W
3910		470R	5%	0,5W
3911		12k	5%	0,5W
3912		8k2	5%	0,5W

CAPACITORS

2900	1µF	20%	63V
2901	100pF	10%	50V
2902	470pF	10%	50V
2903	47pF	5%	50V
2904	10µF	20%	50V
2905	47pF	5%	50V
2906	47pF	5%	50V
2907	10µF	20%	50V
2908	10µF	20%	50V
2909	100pF	10%	50V
2910	470pF	10%	50V
2911	47pF	5%	50V
2913	1µF	20%	63V
2914	47pF	5%	50V
2915	10µF	20%	50V
2916	10µF	20%	50V
2917	100µF	20%	25V
2918	22nF	50V	
2919	47µF	20%	25V

FRONT BOARD

MISCELLANEOUS

1408	4806 267 37060	CINCH SOCKET
1410	4822 267 30968	PHONE SOCKET
1415	4822 130 91245	FTD-11894
1416	4822 134 40965	LAMP INC. 12V 150mA
1417	4822 134 40965	LAMP INC. 12V 150mA
1421	4822 276 13114	TACT SWITCH
1422	4822 276 13114	TACT SWITCH
1424	4822 276 13114	TACT SWITCH
1425	4822 276 13114	TACT SWITCH
1426	4822 276 13114	TACT SWITCH
1427	4822 276 13114	TACT SWITCH
1428	4822 276 13114	TACT SWITCH
1429	4822 276 13114	TACT SWITCH
1430	4822 276 13114	TACT SWITCH
1431	4822 276 13114	TACT SWITCH
1432	4822 276 13114	TACT SWITCH
1433	4822 276 13114	TACT SWITCH
1434	4822 276 13114	TACT SWITCH
1435	4822 276 13114	TACT SWITCH
1436	4822 276 13114	TACT SWITCH
1437	4822 276 13114	TACT SWITCH
1438	4822 276 13114	TACT SWITCH
1439	4822 276 13114	TACT SWITCH
1440	4822 276 13114	TACT SWITCH
1441	4822 276 13114	TACT SWITCH
1442	4822 276 13114	TACT SWITCH
1443	4822 276 13114	TACT SWITCH
1444	4822 276 13114	TACT SWITCH
1446	4822 276 13114	TACT SWITCH
1447	4822 276 13114	TACT SWITCH
1448	4822 276 13114	TACT SWITCH

DIODES

6401	4806 130 37078	1N4148
6402		1N4148
6403		1N4148
6404		1N4148
6405		1N4148
6406		1N4148
6407		1N4148
6408		1N4148
6409		1N4148
6410		1N4148
6411		1N4148
6412		1N4148
6413		1N4148
6414		1N4148
6415		1N4148
6416		1N4148
6418		1N4148
6419		1N4148
6420		1N4148
6421		1N4148
6422		1N4148
6423		1N4148
6424		1N4148
6425		1N4148
6427	4806 130 37047	BZX79-C4V7
6428	4806 130 37042	BZX79-C12 (UAW)
6431	4806 130 37047	BZX79-C4V7
6442	4822 130 82021	LTL307G

DIODES

6450	4806 130 37053	BZX79-C7V5
6453		1N4148
1006	4822 130 83092	LED from Volume pot (TLHR4205)

TRANSISTORS

7406	4806 130 47048	BC558
7408	4806 130 47039	BC548
7409	4806 130 47234	BC337-40
7410		BC337-40
7411		BC337-40
7412		BC337-40
7413		BC548
7421	4806 130 47042	BC548C
7423		BC558
7424	4806 130 47313	BC327-40
7426		BC558
7427		BC548
7432		BC548
7433		BC548
7440		BC558
7445	4806 130 47332	BC338-40
7446		BC338-40
7447	4806 130 47045	BC549C
7448		BC549C

INTEGRATED CIRCUITS

7403	4806 209 87373	NJM4560D
7407		NJM4560D
7415	4822 209 32392	TMP87CK20F
7418	4822 209 31508	ST24C01
7419	4806 209 87164	HEF4094BP
7420	4806 209 87164	HEF4094BP
7422	4822 214 52009	GP1U58XP
7425	4822 209 80891	MC7805CT

COILS

5401	5322 242 73697	CERAM.RES. 8MHz
5402	4822 157 50961	22µH
5405	4822 157 62552	COIL 2,2µH

RESISTORS

3401		68k	5%	0,5W
3402		68k	5%	0,5W
3403		27k	5%	0,5W
3404		27k	5%	0,5W
3405		47k	5%	0,5W
3406		47k	5%	0,5W
3407		3k3	5%	0,5W
3408		3k3	5%	0,5W
3409		2k7	5%	0,5W
3410		2k7	5%	0,5W
3413		100k	5%	0,5W
3414		100k	5%	0,5W
3415		10k	5%	0,5W
3416		10k	5%	0,5W
3417		47k	5%	0,5W
3418		47k	5%	0,5W
3419		47k	5%	0,5W
3420		47k	5%	0,5W
3421		47k	5%	0,5W
3422		47k	5%	0,5W

RESISTORS

3423		47k	5%	0,5W
3424		47k	5%	0,5W
3425		470R	5%	0,5W
3426		470R	5%	0,5W
3427		22k	5%	0,5W
3428		22k	5%	0,5W
3431		2k7	5%	0,5W
3432		2k7	5%	0,5W
3433		3k9	5%	0,5W
3434		3k9	5%	0,5W
3435		1k	5%	0,2W
3436		1k	5%	0,2W
3437		27k	5%	0,5W
3438		27k	5%	0,5W
3439		470R	5%	0,5W
3440		470R	5%	0,5W
3441		470R	5%	0,5W
3442		470R	5%	0,5W
3443		56k	5%	0,5W
3444		56k	5%	0,5W
3445		33k	2%	0,25W
3446		33k	2%	0,25W
3447		33k	2%	0,25W
3448		33k	2%	0,25W
3449		27k	5%	0,5W
3450		27k	5%	0,5W
3451		33k	2%	0,25W
3452		33k	2%	0,25W
3455		33k	2%	0,25W
3456		33k	2%	0,25W
3457		27k	5%	0,5W
3458		27k	5%	0,5W
3459		33k	2%	0,25W
3460		33k	2%	0,25W
3461		33k	2%	0,25W
3462		33k	2%	0,25W
3463		470k	5%	0,5W
3464		470k	5%	0,5W
3465		6k8	5%	0,5W
3466		6k8	5%	0,5W
3469		4k7	5%	0,5W
3470		4k7	5%	0,5W
3471		2k2	5%	0,16W
3472		2k2	5%	0,16W
3473		22k	5%	0,5W
3474		22k	5%	0,5W
3475		470R	5%	0,5W
3476		470R	5%	0,5W
3477		2k2	5%	0,16W
3478		4k7	5%	0,5W
3480	4822 102 10414	Pot 2x20kB		
3481	4822 101 21102	Pot 2x 50k		
3482	4822 101 21102	Pot 2x 50k		
3483	4822 101 21102	Pot 2x 50k		
3484	4822 101 21102	Pot 2x 50k		
3485	4822 101 21102	Pot 2x 50k		
3486		1k	5%	0,2W
3487		1k	5%	0,2W
3488		1k	5%	0,2W
3489		1k	5%	0,2W
3490		220R	5%	0,16W
3491		10k	5%	0,5W
3492		680R	5%	0,5W
3493		220R	5%	0,16W
3494		220R	5%	0,16W

POWER BOARD

MISCELLANEOUS

1304	4822 267 31176	SPEAKER TERMINAL
1305	4822 264 30175	SOCKET EXT. SUPPLY

DIODES

6250	4822 130 82079	D3SBA20
6251	4806 130 37078	1N4148
6252		1N4148
6253	4806 130 37047	BZX79-C4V7
6254		1N4148
6255	4806 130 37501	1N4002
6256		1N4002
6257		1N4002
6258		1N4002
6259		1N4148
6261		1N4002
6350		1N4148
6351		1N4148
6352	4822 130 34278	BZX79-C6V8
6354		1N4148

TRANSISTORS

7250		BC548B
7252	4806 130 47066	BD234
7253		BC548B
7254		BC548B
7255		BC558B
7309		BC337-40
7310		BC337-40
7311		BC337-40
7312		BC337-40
7350		BC337-40
7351		BC548B
7352		BC548B

INTEGRATED CIRCUITS

7313	4822 209 73356	AN7161N(FP)
7314	4822 209 73356	AN7161N(FP)

COILS

5309	4822 157 62552	COIL 2,2µH
5310	4822 157 62552	COIL 2,2µH
5311	4822 157 62552	COIL 2,2µH
5312	4822 157 62552	COIL 2,2µH
5315	4822 157 62552	COIL 2,2µH
5316	4822 157 62552	COIL 2,2µH

RESISTORS

3250		1k	5%	0,2W
3251		10k	5%	0,5W
3252		10k	5%	0,5W
3254		33k	2%	0,25W
3255		1k	5%	0,2W
3256		1k	5%	0,2W
3257		10k	5%	0,5W
3258		4k7	5%	0,5W
3259		33k	2%	0,25W
3260		10k	5%	0,5W

RESISTORS

3261		56k	5%	0,5W
3262		1k	5%	0,2W
3263		4k7	5%	0,5W
3264		270R	5%	0,5W
3307		2k2	5%	0,16W
3308		2k2	5%	0,16W
3309		1k	5%	0,2W
3310		1k	5%	0,2W
3311		1k	5%	0,2W
3312		1k	5%	0,2W
3313		2k2	5%	0,16W
3314		2k2	5%	0,16W
3315		22k	5%	0,5W
3316		22k	5%	0,5W
3317		270R	5%	0,5W
3318		270R	5%	0,5W
3318		220R	5%	0,16W
3319	4822 052 10228	2R2	5%	0,33W
3320	4822 052 10228	2R2	5%	0,33W
3321	4822 052 10228	2R2	5%	0,33W
3322	4822 052 10228	2R2	5%	0,33W
3323		100R	5%	0,5W
3324		100R	5%	0,5W
3325		100R	5%	0,5W
3326		100R	5%	0,5W
3350		47R	5%	0,3W
3351		3k9	5%	0,5W
3352		10k	5%	0,5W
3353		10k	5%	0,5W
3354		100k	5%	0,5W
3355		270R	5%	0,5W

CAPACITORS

2250		100nF	10%	100V
2251		100nF	5%	63V
2252		100nF	5%	63V
2253	4822 124 42119	4700µF	20%	25V
2254		1µF	20%	63V
2255		1nF	10%	50V
2256		22nF	50V	
2257		100nF	10%	100V
2258		100nF	5%	63V
2259		100nF	5%	63V
2260	4822 124 22412	2200µF	20%	16V
2261	4822 124 40201	1000µF	20%	16V
2262		100µF	20%	25V
2265	4822 124 41994	3300µF	20%	16V
2266		1nF	10%	50V
2267		1nF	10%	50V
2311		1µF	20%	63V
2312		1µF	20%	63V
2315		33nF	5%	100V
2316		33nF	5%	100V
2317		1µF	20%	63V
2318		1µF	20%	63V
2319		47µF	20%	25V
2320		47µF	20%	25V
2321		680pF	10%	50V

CAPACITORS

2322	680pF	10%	50V
2323	1,8nF	10%	50V
2324	1,8nF	10%	50V
2325	220µF	20%	16V
2326	220µF	20%	16V
2329	22µF	20%	25V
2330	22µF	20%	25V
2333	47µF	20%	25V
2334	47µF	20%	25V
2335	47µF	20%	25V
2336	47µF	20%	25V
2337	220nF	5%	63V
2338	220nF	5%	63V
2339	220nF	5%	63V
2340	220nF	5%	63V
2350	100µF	20%	25V
2351	100nF	5%	63V
2352	100nF	5%	63V
2353	100nF	5%	63V
2354	1µF	20%	63V
2355	47pF	5%	50V
2356	47pF	5%	50V
2357	10µF	20%	50V
2361	10nF	20%	25V
2362	10nF	20%	25V

RECORDER BOARD

DIODES

6701	4806 130 37078	1N4148
6702		1N4148
6704		1N4148
6705		1N4148
6706		1N4148
6707		1N4148
6710		1N4148
6712		1N4148

TRANSISTORS

7703	4806 130 47041	BC548B
7704		BC548B
7705		BC548B
7706	4806 130 47332	BC338-40
7707		BC338-40
7708	4806 130 47050	BC558B
7709		BC548B
7712	4806 130 47042	BC548C
7713		BC558B
7753		BC548B
7756		BC338-40
7757		BC338-40

INTEGRATED CIRCUITS

7701	4806 209 87485	KA2224
7702	4806 209 87486	UPC1313HA

COILS

5701	4822 157 51238	820µH
5702	4822 157 51238	820µH

TRAFO BOARD

MISCELLANEOUS

1250	4822 253 10065	FUSE T5A
1251	4822 071 56301	Fuse T 630mA/250V
1252	4822 071 56301	Fuse T 630mA/250V
1260	4822 265 31015	VOLTAGE SELECTOR

06RA94-07
POS. 1255 - Conec. de rede - 4822 265 31015
POS 1260 - Selet. de Volt. - 4822 272 10269

5250	4822 146 31235	TRAFO

COILS

5251	4822 157 70003	COIL, MAINS FILTER

RESISTORS

3298	4822 053 21106	10M	5%	0,5W

ECO4 Tuner

MISCELLANEOUS

1101	4822 267 10283	SOCKET COAX IEC 75R
1101	4822 265 20598	F-CONNECT. COAX 75R

DIODES

6105	4822 130 83075	HN1V02H
6109	4822 130 82833	1SV228
6122	4806 130 37078	1N4148
6121		1N4148
6123		1N4148
6124	4822 130 82833	1SV228
6140		1N4148
6154		1N4148
6174	4822 130 34233	BZX79-B5V1

TRANSISTORS

7102	4806 130 47321	BC848C(CHIP)
7104		BC848C(CHIP)
7105	4806 130 47337	2SA838B
7120	4806 130 47316	2SC1047
7121		BC848C(CHIP)
7123		BC848C(CHIP)
7128		BC848C(CHIP)
7152	4806 130 47269	BC858B(CHIP)
7156	4806 130 47234	BC337-40
7157		BC337-40
7169		BC858B(CHIP)
7170		BC848C(CHIP)
7171		BC848C(CHIP)
7174		BC858B(CHIP)
7178		BC858B(CHIP)
7179		BC848C(CHIP)

INTEGRATED CIRCUITS

7140	4822 209 32011	TEA5712T/N1 (Radio-IC)
7150	5322 209 14482	HEF4069UBT (6xINVERTER)
7172	5322 209 11517	PC74HCU04M (6xINVERTER)
7173	4822 209 31998	LC7218M SYNTHESIZER

COILS

5105	4822 158 60641	Ferrite ant.,MW/LW
5106	4822 158 60642	Ferrite ant.,MW
5109	4806 156 37045	RF COIL var. 1,5 TURNS
5120		RF COIL var. 1,5 TURNS
5122	4822 157 60517	COIL var. 110µH 8%
5123	4822 157 60517	COIL var. 110µH 8%
5140	4822 158 60511	AM-IF FILTER 450kHz
5142	4822 157 70302	AM-IF FILTER 450kHz
5143	4822 242 70665	CER. FILTER 10,7MHZ
5144	4822 242 70665	CER. FILTER 10,7MHZ
5145	4806 242 77124	CER. DISCRIMINATOR
5150	4822 157 50975	1mH 10%
5170	4822 242 72976	CER.RESONATOR 7,2MHz
5171	4822 157 50963	2,2µH

RESISTORS

3119		470R	5%	0,5W
3120		5k6	5%	0,16W
3124		2k2	5%	0,16W
3132		4k7	5%	0,5W
3141		220R	5%	0,1 6W
3148	4822 100 11163	POTMETER 100K LIN.		
3151		1k5	5%	0,16W
3156		10k	5%	0,5W
3162		1k	5%	0,2W
3163		1k	5%	0,2W
3164		4k7	5%	0,5W
3165		4k7	5%	0,5W
3170		4k7	5%	0,5W
3173		15k	5%	0,5W
3174		10k	5%	0,5W
3177		10k	5%	0,5W
3181		100k	5%	0,5W
3189		1k8	5%	0,16W
3190		1k8	5%	0,16W
3191		1k8	5%	0,16W
3192		1k8	5%	0,16W
3193		470R	5%	0,5W
3194		470R	5%	
3195		470R	5%	
3197		470R	5%	

CHIP RESISTORS

3106		100k	5%	0,1W
3107		2k2	5%	0,1W
3108		100k	5%	0,1W
3109		2k2	5%	0,1W
3110		47k	5%	0,1W
3111		15k	5%	0,1W
3112		22k	5%	0,1W
3116		3M3	5%	0,1W
3121		100k	5%	0,1W
3122		470R	5%	0,1W
3123		22k	5%	0,1W
3125		4k7	5%	0,1W
3128		2k2	5%	0,1W
3129		4k7	5%	0,1W
3142		2k2	5%	0,1W
3144		47k	5%	0,1W
3147		180k	5%	0,1W
3149		68k	5%	0,1W
3154		33k	5%	0,1W
3155		33k	5%	0,1W
3157		47k	5%	0,1W
3158		18R	5%	0,1W
3160		82k	5%	0,1W
3161		82k	5%	0,1W
3166		100R	5%	0,1W
3167		CHIP JUMPER 0805		
3171		100R	5%	0,1W
3172		4k7	5%	0,1W
3175		100k	5%	0,1W
3176		100k	5%	0,1W
3178		100k	5%	0,1W
3179		22k	5%	0,1W
3180		100k	5%	0,1W
3183		22k	5%	0,1W
3184		22k	5%	0,1W

CHIP RESISTORS

3185		100k	5%	0,1W
3186		100k	5%	0,1W
3188		1k	2%	0,25W
3211		CHIP JUMPER 1206		
3212		CHIP JUMPER 1206		
3213		CHIP JUMPER 1206		
3220		CHIP JUMPER 0805		
3222		CHIP JUMPER 0805		
3222		CHIP JUMPER 0805		
3223		CHIP JUMPER 0805		
3224		CHIP JUMPER 0805		
3226		CHIP JUMPER 0805		
3226		CHIP JUMPER 0805		
3228		CHIP JUMPER 1206		
3229		CHIP JUMPER 0805		
3229		CHIP JUMPER 0805		
3233		CHIP JUMPER 0805		
3237		CHIP JUMPER 1206		
3238		CHIP JUMPER 0805		
3240		CHIP JUMPER 1206		
3241		CHIP JUMPER 0805		
3241		CHIP JUMPER 0805		
3242		CHIP JUMPER 1206		
3243		CHIP JUMPER 0805		
3243		CHIP JUMPER 0805		
3244		CHIP JUMPER 0805		
3245		CHIP JUMPER 0805		
3245		CHIP JUMPER 0805		
3246		CHIP JUMPER 1206		
3247		CHIP JUMPER 1206		
3248		CHIP JUMPER 0805		
3249		15k	5%	0,1W
3249		820R	5%	0,1W
3249		820R	5%	0,1W

CAPACITORS

2100		100pF	10%	50V
2104		100pF	10%	50V
2107		1nF	5%	50V
2115	4822 125 60101	10pF VARIABLE		
2122		1nF	5%	50V
2123		1nF	5%	50V
2124		10nF	20%	16V
2129		390pF	1%	160V
2130	4822 125 50355	4,2 - 20pF VARIABLE		
2134		1nF	10%	50V
2135		560pF	1%	160V
2141		2,2µF	20%	63V
2142		1µF	20%	63V
2150		10µF	20%	50V
2151		10µF	20%	50V
2156		100nF		25V
2157		100nF		25V
2158		1nF	5%	50V
2159		1nF	5%	50V
2160		1µF	20%	63V
2161		1µF	20%	63V
2162		1µF	20%	63V
2172		1,5µF	20%	50V
2173		47µF	20%	25V
2177		100nF		25V

CAPACITORS

2178	1nF	10%	50V
2179	100pF	10%	50V
2184	100µF	20%	10V
2186	1nF	5%	50V

CHIP CAPACITORS

2110	33pF	5%	50V
2110	6,8pF	5%	50V
2110	6,8pF	5%	50V
2112	100nF	10%	63V
2114	100pF	5%	50V
2120	470pF	10%	50V
2121	15pF	5%	50V
2133	10nF	20%	50V
2138	22pF	5%	50V
2138	22pF	5%	50V
2139	2,2nF	10%	50V
2143	470nF	20%	50V
2144	470nF	20%	50V
2145	100nF	10%	63V
2146	2,2pF	10%	50V
2147	10nF	20%	50V
2152	100nF	10%	63V
2154	2,2nF	20%	50V
2155	2,2nF	20%	50V
2158	680pF	5%	50V
2159	680pF	5%	50V
2168	1,8nF	5%	NP0
2169	330pF	5%	50V
2170	4,7nF	10%	63V
2171	4,7nF	10%	63V
2174	560pF	5%	63V
2175	100pF	5%	50V
2180	27pF	5%	50V
2181	12pF	5%	63V
2183	100nF	10%	63V
2185	100nF	10%	63V

CD BOARD

MISCELLANEOUS

1020	4822 071 51601	FUSE 160mA
1021	4822 071 51601	FUSE 160mA
1250	4822 267 30933	SOCKET CHINCH

DIODES

6103	4806 130 37078	1N4148
6550	4806 130 37190	BZX79-C3V9
6660	4822 130 34173	BZX79-C5V6

TRANSISTORS

7040	4822 130 60887	BF840
7041	4806 130 47321	BC848 (CHIP)
7042	4806 130 47269	BC858 (CHIP)
7043	4806 130 47321	BC848 (CHIP)
7044		BC848 (CHIP)
7140	4806 130 47269	BC858 (CHIP)
7141	4806 130 47321	BC848 (CHIP)
7360	4822 130 42615	BC817 (CHIP)
7361		BC817 (CHIP)
7362	4806 130 47269	BC858 (CHIP)
7550		BC858 (CHIP)

INTEGRATED CIRCUITS

7000	4822 209 31064	TDA1301T/N1
7060	4822 209 72587	TCA372DP2
7080	4822 209 72587	TCA372DP2
7101	4822 209 63925	FCB61C65L-70T
7102	4806 209 87619	SAA7341GP
7300	4806 209 87373	NJM4560D
7301		NJM4560D
7500	4822 209 80891	MC7805CT
7660	4822 209 72587	TCA372DP2
7700	4806 209 87374	MC68HC05C8/SERVO-S17

COILS

1002	4822 242 73557	CERAMIC RES. 8,46MHz
1570	4822 242 81151	X-TAL 16,934MHz
1700	4822 242 72527	CERAMIC RES. 4.0 MHz
5250	4822 148 80281	COIL 100µH

RESISTORS

3000	4822 050 21003	10k	2%	0,25W
3001	4822 050 21003	10k	2%	0,25W
3002	4822 050 21003	10k	2%	0,25W
3003	4822 050 21003	10k	2%	0,25W
3004	4822 050 21003	10k	2%	0,25W
3005	4822 050 21003	10k	2%	0,25W
3007	4822 052 10338	3R3	NFR25	
3008	4822 052 10338	3R3	NFR25	
3014	4822 052 10478	4R7	5%	NFR
3015	4822 050 21002	1k	1%	0,6W
3016	4822 050 21002	1k	1%	0,6W
3049	4822 050 24301	430R	1%	0,6W
3056	4822 050 21204	120k	1%	0,6W
3057	4822 050 25603	56k	1%	0,6W
3058	4822 050 21002	1k	1%	0,6W
3062	4822 116 52244	15k	5%	0,5W
3064	4822 050 21503	15k	1%	0,6W
3065	4822 052 10229	22R	5%	0,33W
3066	4822 052 10108	1R	5%	0,33W
3067	4822 052 10108	1R	5%	0,33W

ACCESSORIES

4806 321 17067	AC CORD
4822 218 10513	IR REMOTE CONTROL