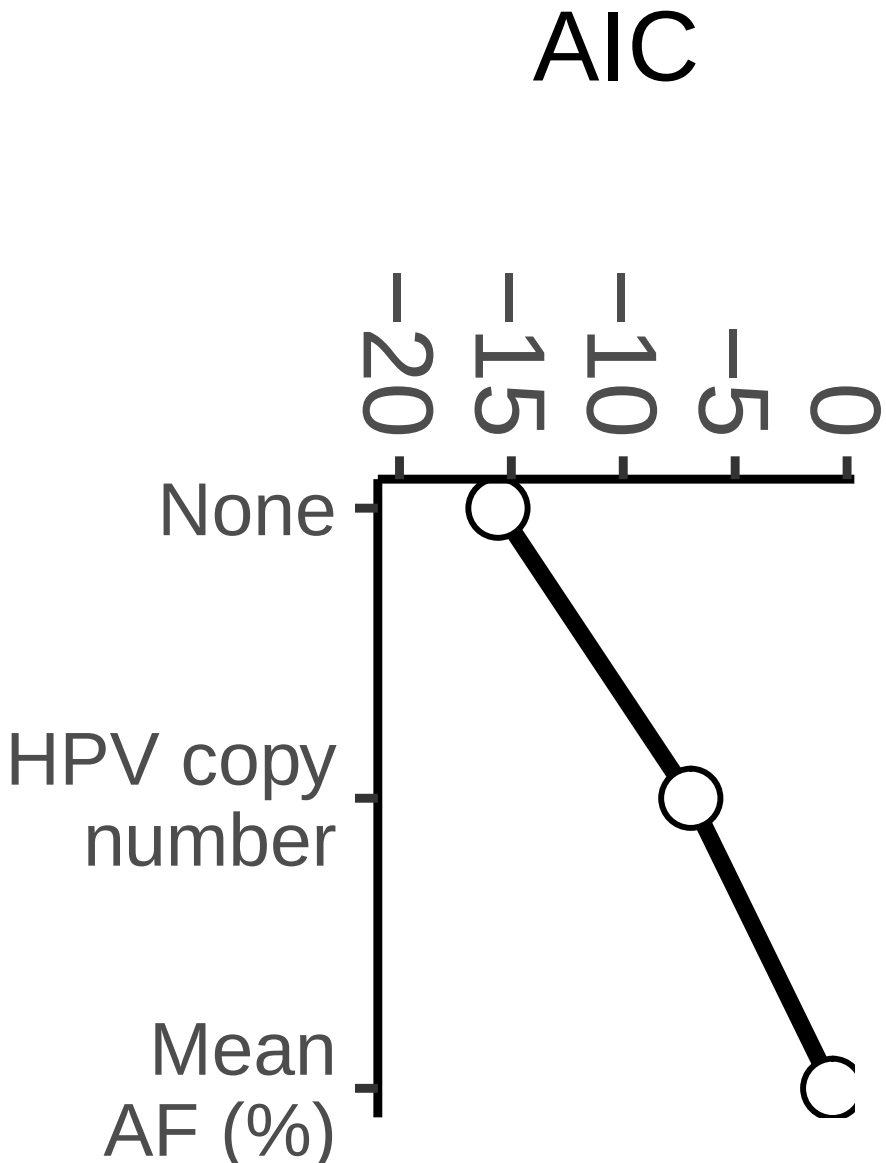
AIC
20
15
10
5
0
None
HPV copy number
Mean AF (%)