E22-230T33S User Manual

230MHz LoRa Wireless Module

Chengdu Ebyte Electronic Technology Co.,Ltd.

CONTENTS

DISCLAIMER 3
1: INTRODUCTION 4
1.1 BRIEF INTRODUCTION 4
1.2 FEATURES 4
1.3 APPLICATION 5
2 SPECIFICATION AND PARAMETER 5
2.1 LIMIT PARAMETERS 5
2.2 OPERATING PARAMETERS 5
2.3 HARDWARE PARAMETERS 6
3 SIZE AND PIN DEFINITION 7
3.1 E22-230T30 / 33S PIN DEFINITION 7
4 RECOMMENDED CONNECTION DIAGRAM 8
4.2 E22-230T33S 8
5 FUNCTIONAL DETAILS 9
5.1 FIXED POINT MODE 9
5.2 RADIO MODE 9
5.3 RADIO ADDRESS 10
5.4 LISTENING ADDRESS 10
5.5 MODULE RESET 10
5.6 AUX EXPLANATION 10
5.6.1 Serial port data output indication 10
5.6.2 The wireless transmission indication 11
5.6.3 The module is in the configuration process 11
5.6.4 Precautions 12
6 WORKING MODE 12
6.1 MODE SWITCHING 13
6.2 GENERAL MODE (MODE 0) 13
6.3 WOR MODE (MODE 1) 14
6.4 CONFIGURATION MODE (MODE 2) 14
6.5 DEEP SLEEP MODE (MODE 3) 14
7 REGISTER READ AND WRITE CONTROL 14
7.1 DIRECTIVE FORMAT 14
7.2 REGISTER DESCRIPTION 15
7.3 FACTORY DEFAULT PARAMETERS 19
8: USE OF THE RELAY NETWORK MODE 19
9 CONFIGURATION SOFTWARE DESCRIPTION 20

Copyright ©2012–2025，Chengdu Ebyte Electronic Technology Co.,Ltd.

10: HARDWARE DESIGN 21
11 FAQ 22
11.1 COMMUNICATION RANGE IS TOO SHORT 22
11.2 MODULE IS EASY TO DAMAGE 22
11.3 BER(BIT ERROR RATE) IS HIGH 22
12 PRODUCTION GUIDANCE 23
12.1 REFLOW SOLDERING TEMPERATURE 23
12.2 REFLOW SOLDERING CURVE 24
13 E22 SERIES 24
14 ANTENNA RECOMMENDATION 25
14.1 THE ANTENNA IS RECOMMENDED 25
15 MASS PACKAGING METHOD 25
REVISE THE HISTORY 26
ABOUT US 26

Copyright ©2012–2025，Chengdu Ebyte Electronic Technology Co.,Ltd.

Disclaimer

EBYTE reserves all rights to this document and the information contained herein. Products, names, logos and designs described herein may in whole or in part be subject to intellectual property rights. Reproduction, use, modification or disclosure to third parties of this document or any part thereof without the express permission of EBYTE is strictly prohibited.

The information contained herein is provided “as is” and EBYTE assumes no liability for the use of the information. No warranty, either express or implied, is given, including but not limited, with respect to the accuracy, correctness, reliability and fitness for a particular purpose of the information. This document may be revised by EBYTE at any time. For most recent documents, visit www.cdebyte.com.

Copyright ©2012–2025，Chengdu Ebyte Electronic Technology Co.,Ltd.

1: Introduction

1.1 Brief Introduction

E22-230T33S is a new generation of LoRa wireless module, this module (UART) is based on SEMTECH high performance RF chip, transmitting power of 33 dBm, with a variety of transmission modes, working in (220.125~236.125MHz) band (default 230.125MHz), LoRa frequency expansion technology, TTL level output, compatible with 3.3V and 5V IO port voltage.

E22-230T33S adopts the new generation LoRa frequency expansion technology, faster, lower power consumption and smaller volume; support air wake up, wireless configuration, carrier monitoring, automatic relay, communication key and other functions, support subcontract length setting, can provide customized development services.

1.2 Features

- Based on the SEMTECH high-performance RF chip, the development of a new Lo R a spread frequency modulation technology, bring further communication distance, anti-interference ability is stronger;
- Support automatic relay networking, multi-level relay is suitable for long-distance communication, the same area running multiple networks running at the same time;
- Support users to set the communication key, and can not be read, greatly improve the confidentiality of user data;
- Support the LBT function, and monitor the channel environment noise before sending, which can greatly improve the communication success rate of the module in the harsh environment;
- Support RSSI signal strength indication function for assessing signal quality, improving communication network and ranging;
- Support wireless parameter configuration, through wireless sending command packet, remote configuration or reading wireless module parameters;
- Support air wake-up, that is, ultra-low power consumption function, suitable for the application scheme of battery power supply;
- Support fixed-point transmission, broadcast transmission, and channel monitoring;
- Support deep dormancy, the power consumption of the whole machine is about 2 uA;
- Support 230 MHz power frequency band, penetration diffraction ability is stronger than 433 MHz;
- The module has built-in PA + LNA, with the communication distance up to 16km under ideal conditions;
- The parameters are saved, and the module will work according to the set parameters;
- Efficient watchdog design, in case of abnormal, the module will automatically restart, and can continue to work according to the previous parameter Settings;
- Support the data transmission rate of 2.4k ~15.6k bps;
- Support 3.3~5.5V power supply, more than 5V power supply can ensure the best performance;
- Industrial grade standard design, support-40~ + 85℃ for a long time to use;
- Dual antenna optional (IPEX / stamp hole), easy for secondary development and integration.

Copyright ©2012–2025，Chengdu Ebyte Electronic Technology Co.,Ltd.

1.3 Application

- Home security alarm and remote keyless entry;
- Smart home and industrial sensors;
- Wireless alarm security system;
- Building automation solutions;
- Wireless industrial-grade remote control;
- Health care products;
- Advanced meter reading architecture (AMI);
- Automotive industry applications.

2 Specification and parameter

2.1 Limit parameters

RF parameters	unit	Model	Remarks
		E22-230T33S	
Work frequency band	MHz	220.125 - 236.125	Support for the ISM frequency band
Transmitting power	dBm	33.0±0.5	
Block power	dBm	0 ~ 10.0	The probability of burning in close range use is small
Receiving sensitivity	dBm	-147±1.0	The ial rate 2.4 kbps
Measured distance	Km	12	Clear and empty, antenna gain 5 dBi, antenna height 2.5 m, air rate 2.4 kbps
Air rate	bps	0.3k ~15.6k	User programming control

2.2 Operating parameters

Electrical parameters	unit	Model	Remarks
		E22-230T33S	
Working voltage	V	3.3~5.5V	3.3V can guarantee the output power
Communication level	V	3.3	5 VTTL
Emission current	mA	990	Instantaneous power consumption
Receive current	mA	15	
The dormant current	u A	2	Software off
Working temperature	℃	-40 ~ +85	technical grade

Copyright ©2012–2025，Chengdu Ebyte Electronic Technology Co.,Ltd.

2.3 Hardware parameters

Main Parameter	E22-230T33S	Remarks
Size	25*40.5mm	
Weight	5.40g	±0.1
Package length	240 Byte	Can be sent by instruction subcontracting 32 / 64 / 128 / 240 bytes
Cache capacity	1000 Byte	
Modulation mode	LoRa	New-generation of LoRa modulation technology
CI	UART gorge line	TTL electrical level
Packaging method	Patch type, stamp hole, spacing 1.27/2.54mm	
Interface mode	Stamp hole	
PA+LNA	have	The module has a built-in PA + LNA

Copyright ©2012–2025，Chengdu Ebyte Electronic Technology Co.,Ltd.

3 Size and pin definition

3.1 E22-230T30 / 33S pin definition

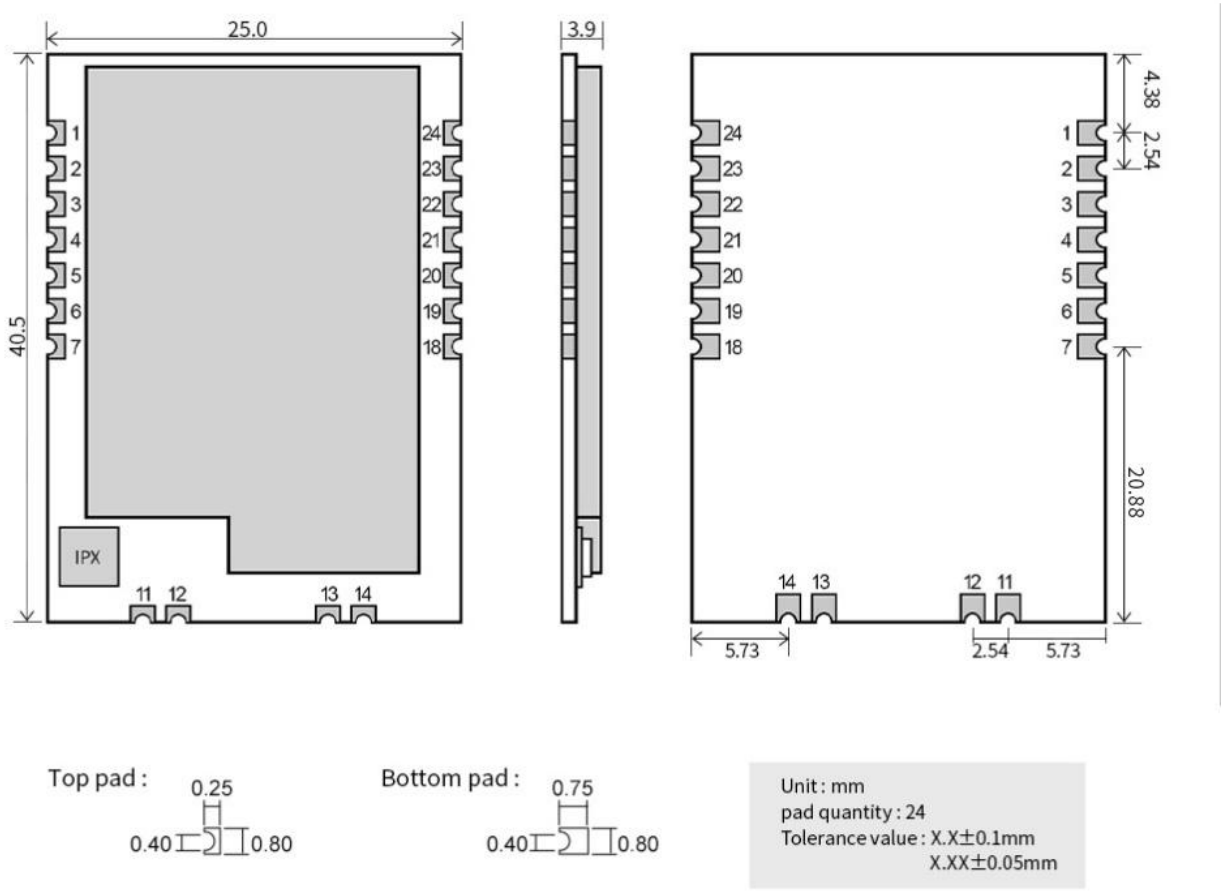

Pin No.	Item	Direction	Description
1	GND	import	Module ground wire
2	VCC	import	Module power supply is positive reference, voltage range: 3.3~5.5V DC
3	AUX	output	Used to indicate the working state of the module; user awakens external MCU and output low level during self-test initiation (can be suspended)
4	TXD	output	TTL serial port output, connected to the external RXD input pin;
5	RXD	import	TTL serial port input, connected to the external TXD output pin;
6	M1	Input (very weak pull-up)	With M0, determine the four working modes of the module (not suspended, if not grounded)
7	M0	Input (very weak	With M1, determine the four working modes of the module (not

Copyright ©2012–2025，Chengdu Ebyte Electronic Technology Co.,Ltd.

		pull-up)	suspended, if not grounded)
11	ANT	output	Antenna interface (high-frequency signal output, 50 ohm characteristic impedance)
12	GND		Fixed to
13	GND		Fixed to
14	GND		Fixed to
18	P1.6	Input / output	NC pin, which must be suspended (for subsequent extension)
19	P1.5	Input / output	NC pin, which must be suspended (for subsequent extension)
20	P2.7	Input / output	NC pin, which must be suspended (for subsequent extension)
21	+3.3V	import	Power pin for program loading (user connected, suspended, and not available as power)
22	C2D	import	Data pins during program loading (overhang, user without connection)
23	GND	import	Module ground wire
24	C2CK	import	Clock pin for program loading (suspended, user without connection)

4 Recommended connection diagram

4.2 E22-230T33S

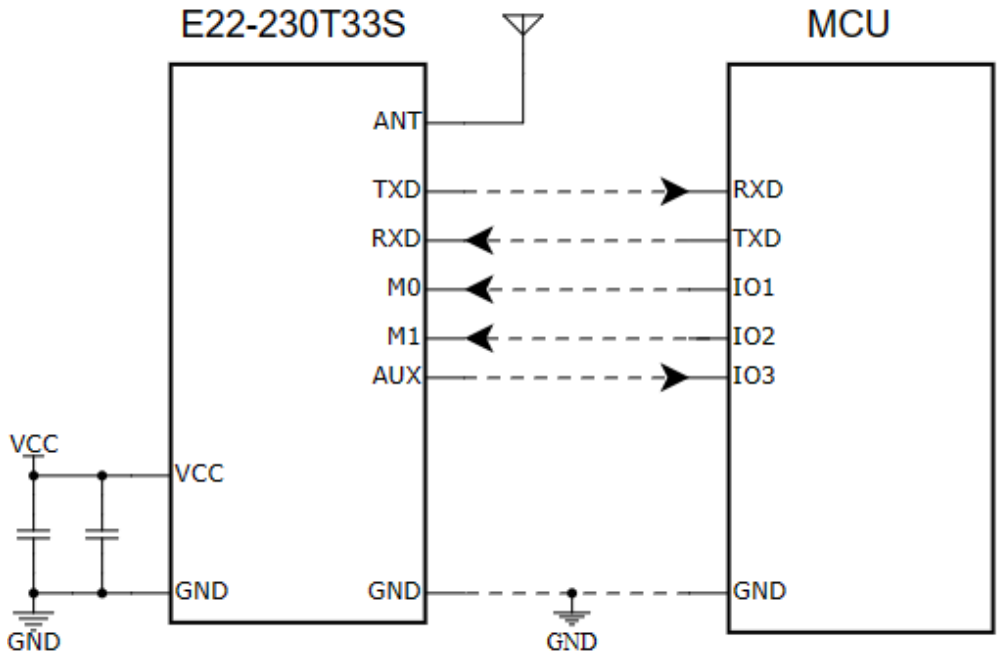

5 Functional details

5.1 Fixed point mode

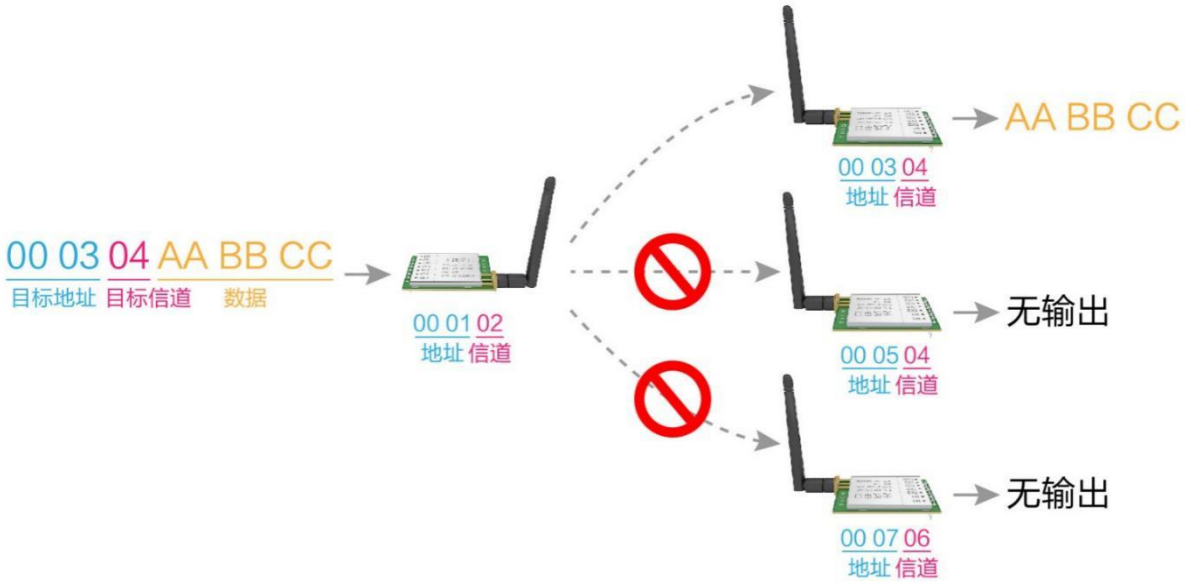

5.2 Radio mode

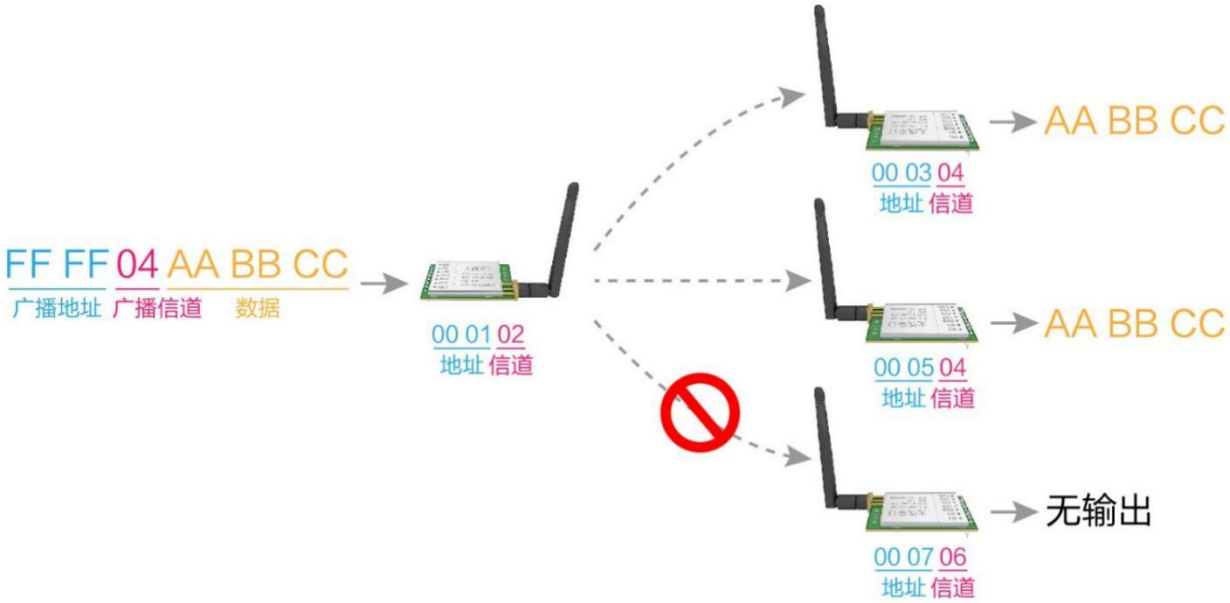

Copyright ©2012–2025，Chengdu Ebyte Electronic Technology Co.,Ltd.

5.3 Radio address

- Example: Set module A address to 0xFFFF and channel to 0x04.
- When module A is used as transmission (the same mode, transparent transmission mode), all the receiving modules under the 0x04 channel can receive data to achieve the purpose of broadcasting.

5.4 Listening address

- Example: Set module A address to 0xFFFF and channel to 0x04.
- When module A is received as, all the data under the 0x04 channel to achieve the purpose of monitoring.

5.5 Module reset

- After the module is powered on, the AUX will immediately output the low level, conduct the hardware self-test, and set the working mode according to the user parameters;
  In this process, AUX keeps a low level, after which AUX outputs a high level, and starts to work normally according to the combination of M1 and M0;
  Therefore, the user needs to wait for the AUX to rise along, as the starting point for the normal operation of the module.

5.6 AUX explanation

- AUX is used for wireless sending and receiving buffer indication and self-test indication.
- It indicates whether the module has data that has not been transmitted wirelessly, or whether the wireless data has not been transmitted entirely through the serial port, or whether the module is in the process of initializing the self-test.

5.6.1 Serial port data output indication

- For awakening the external MCU in dormancy;

Copyright ©2012–2025，Chengdu Ebyte Electronic Technology Co.,Ltd.

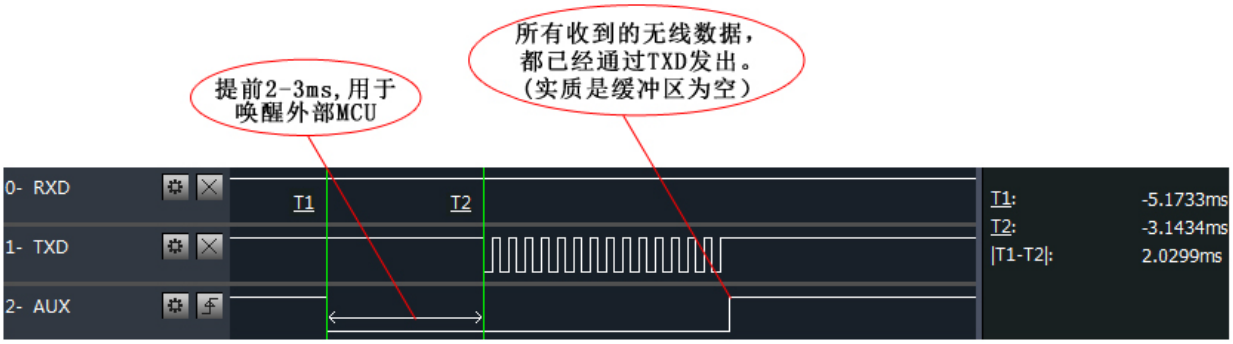

模块串口外发数据时，AUX引脚时序图

5.6.2 The wireless transmission indication

- Buffer empty: the data of the internal 1000 bytes buffer is written to the wireless chip (automatic subcontracting);
  When AUX = 1, the user continuously initiates less than 1000 bytes of data, which will not overflow;
  When AUX = 0, the buffer is not empty: the data of the internal 1000-byte buffer has not yet been fully written to the wireless chip and turned on transmission. At this time, the module may wait for the user data to end the timeout, or is undergoing wireless subcontract transmission.
  [Note]: AUX = 1 does not mean that all the serial port data of the module is transmitted wirelessly, or the last packet of data may be being transmitted.

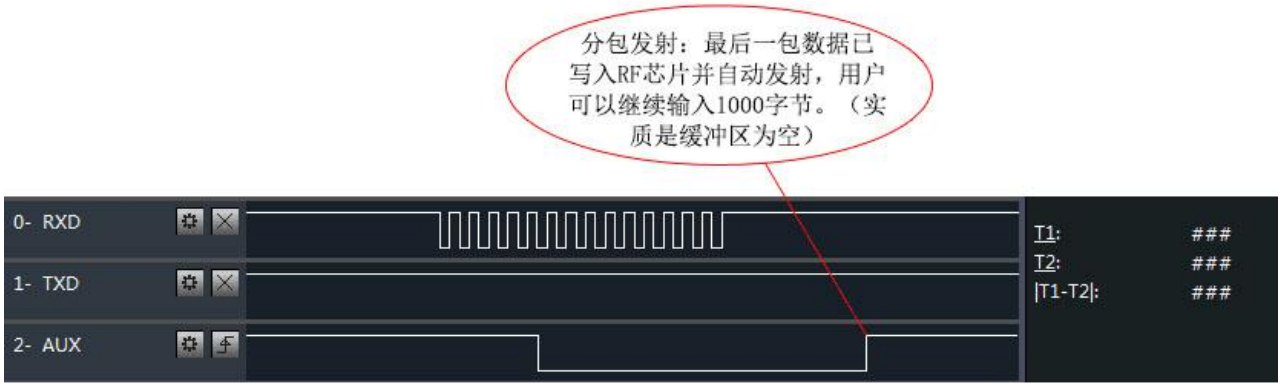

模块接收串口数据时，AUX引脚时序图

5.6.3 The module is in the configuration process

- Only when reset and exit dormancy mode;

Copyright ©2012–2025，Chengdu Ebyte Electronic Technology Co.,Ltd.

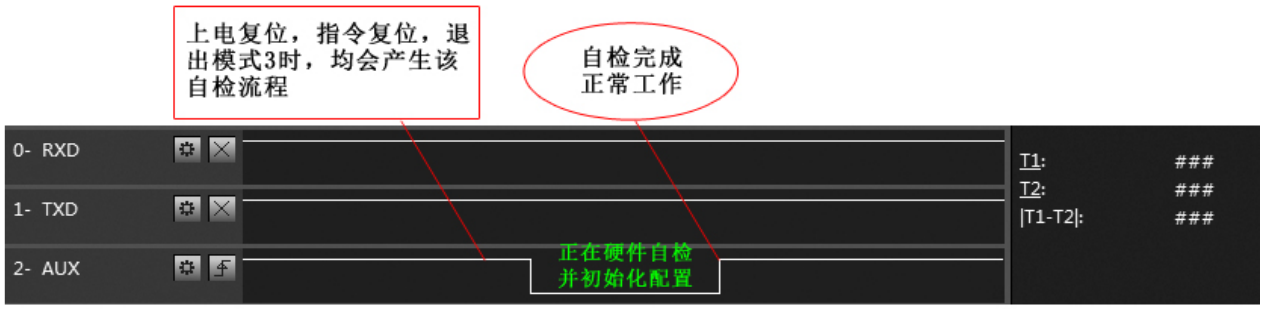

自检期间，AUX引脚时序图

5.6.4 Precautions

No	AUX matters need attention
1	The above function 1 and function 2, the output low level priority, that is, meet any one of the output low level conditions, AUX output low level; When all low level conditions are not satisfied, AUX outputs a high level.
2	When AUX output is low level, the module is busy and no working mode detection will be conducted at this time; When the module AUX is output within 1ms after the high level, the mode switching work will be completed.
3	After the user switches to the new working mode, he needs to rise the AUX for at least 2ms before the module will really enter this mode; If the AUX is always at a high level, then the mode switch takes effect immediately.
4	The user enters another mode from mode 3 (sleep mode), or during the reset process, the module resets the user parameters, during which the AUX outputs a low level.
5	Due to the characteristics of LoRa modulation mode, the information transmission delay is much longer than that of FSK. For example, at 1.2 kbps empty speed, the 100-byte transmission delay is about 1.5 seconds. It is suggested that customers do not carry out large data transmission at low altitude speed, so as to avoid abnormal communication caused by data loss caused by data accumulation.

6 Working mode

The module has four working modes, set by pins M1 and M0; the details are shown in the following table:

Pattern (0-3)	M1	M0	Model introduction	remarks
0 Transmission mode	0	0	Serial port open, wireless open, transparent transmission	Support for special command aerial configuration
1WOR pattern	0	1	You can be defined as the WOR sender and the WOR receiver	Support air arousal
2 Configuration mode	1	0	The user can access the register through the serial port to control the working status of the module	
3 Deep dormancy	1	1	Module enters dormancy	

Copyright ©2012–2025，Chengdu Ebyte Electronic Technology Co.,Ltd.

6.1 Mode switching

No	Remarks
1	● Users can combine M1 and M0 with high and low levels to determine the module operation mode. Two GPIO of the MCU can be used to control the mode switching; ● When M1 and M0 are changed: if the module is idle, after 1ms, it can start working according to the new mode; ● If the module has serial data that has not been transmitted wirelessly, the new working mode can be entered after the launch; ● If the module receives the wireless data and sends the data through the serial port, it needs to send the data before entering the new working mode; ● So mode switching can only be effective when AUX outputs 1, otherwise it will be delayed.
2	● For example, if the user continuously inputs a large amount of data and switches the mode, the switching mode operation is invalid; the module will process all the user data before conducting new mode detection; ● Therefore, it is generally recommended to detect the output state of the AUX pin, and wait for the output high level for 2ms before switching.
3	● When the module is switched from other mode to dormant mode, if there is data not processed; ● The module will process the data (including receiving and sending) before entering the hibernation mode. This feature can be used for fast sleep to save power consumption; for example, the transmission module works in mode 0, the user initiates the serial port data "12345", and then do not have to wait for the AUX pin idle (high level), can directly switch to the sleep mode, and the user main MCU immediately sleep, the module will automatically send all the user data through wireless, automatically into hibernation within 1ms; ● This saves the working time of MCU and reduces the power consumption.
4	● Similarly, any mode switching, can use this feature, the module handles the current mode event, within 1ms, will automatically enter the new mode; thus eliminating the user query AUX work, and can achieve the purpose of rapid switching; ● For example, switching from transmitting mode to receiving mode; the user MCU can also enter hibernation before the mode switching premise, and use the external interrupt function to obtain AUX changes, thus performing mode switching.
5	● This operation mode is very flexible and efficient, which is designed in accordance with the convenience of operation of the user MCU, and can reduce the workload of the whole system as much as possible, improve the system efficiency and reduce the power consumption.

6.2 General Mode (Mode 0)

Type	When M0 = 0 and M1 = 0, the module works in mode 0
TX	The user can enter the data through the serial port, and the module will initiate the wireless transmission.
RX	The wireless receiving function of the module is turned on and will output through the serial TXD pin after receiving the wireless data.

Copyright ©2012–2025，Chengdu Ebyte Electronic Technology Co.,Ltd.

6.3 WOR Mode (Mode 1)

Type	When M0 = 1 and M1 = 0, the module works in mode 1
TX	When defined as the transmitting side, the wake-up code is automatically added for a certain time before launch
RX	Data can be received normally, and the receiving function is equivalent to mode 0

6.4 Configuration mode (Mode 2)

Type	When M0 = 0 and M1 = 1, the module works in mode 2
TX	Wireless launch closed
RX	Wireless receive closed
Configure	The user can access the register to configure the module operating state

6.5 Deep sleep mode (mode 3)

Type	When M0 = 1 and M1 = 1, the module works in mode 3
TX	Unable to transmit the wireless data.
RX	Unable to receive the wireless data.
Note	When entering from the hibernation mode to the other mode, the module will reconfigure the parameters, and the AUX remains low during the configuration process; After the output high level, so it is recommended that the user detect the AUX rising edge.

7 Register read and write control

7.1 Directive format

Under the configuration mode (mode 2: M1=1, M0=0), the supported instruction list is as follows (when setting, only 9600,8N1 format is supported):

No	Format	Define

1	Set the register	Instructions: C0 + starting address + length + parameter Response: C1 + starting address + length + parameter Example 1: The configuration channel is 0x09 Command start address length parameter Send to: C0 05 01 09 Return: C1 05 01 09 Example 2: simultaneously configure the module address (0x1234), network address (0x00), serial port (9600 8N1), empty speed (1.2K) Send to: C0 00 04 12 34 00 61 Return: C1 00 04 12 34 00 61
2	Read the register	Instructions: C1 + starting address + length Response: C1 + starting address + length + parameter Example 1: Read the access channel Command start address length parameter Send to: C1 05 01 Return: C1 05 01 09 Example 2: Read the module address, network address, serial port, and empty speed simultaneously Send to: C1 00 04 Return: C1 00 04 12 34 00 61
3	Set up the temporary register	Instructions: C2 + starting address + length + parameter Response: C1 + starting address + length + parameter Example 1: The configuration channel is 0x09 Command start address length parameter Send to: C2 05 01 09 Return: C1 05 01 09 Example 2: simultaneously configure the module address (0x1234), network address (0x00), serial port (9600 8N1), empty speed (1.2K) Send to: C2 00 04 12 34 00 61 Return: C1 00 04 12 34 00 61
5	Wireless configuration	Instruction: CF CF + General instruction Response: CF CF + conventional response Example 1: The wireless configuration channel is 0x09 Wireless command header command starting address length parameter Send to: CF CF C0 05 01 09 Return: CF CF C1 05 01 09 Example 2: wireless simultaneous configuration module address (0x1234), network address (0x00), serial port (9600 8N1), empty speed (1.2K) Send to: CF CF C0 00 04 12 34 00 61 Return: CF CF C1 00 04 12 34 00 61
6	format error	Format error response FF FF FF

7.2 Register description

No	read-write	name	description	remarks

Copyright ©2012–2025，Chengdu Ebyte Electronic Technology Co.,Ltd.

00H	Read / write	ADDH	ADDH (default 0)				Module address is high byte and low byte; Note: When the module address is equal to FFFF, it can be used as a broadcast and listening address, that is, the module will not filter the address
01H	Read / write	ADDL	ADDL (default 0)				
02H	Read / write	NETID	NETID (default 0)				Network address, used to distinguish networks; When communicating with each other, set it to be the same.
03H	Read / write	REG0	7	6	5	UART Serial Rate (bps)	The two modules of communication, serial port rate can be different, calibration mode can also be different; When large data packets are launched continuously, users need to consider the data blocking caused by the same port rate, or may even be lost; It is generally recommended that the same have the same the same.
			0	0	0	The serial port port rate is 1200	
			0	0	1	The serial port port rate is 2400	
			0	1	0	The serial port port rate is 4800	
			0	1	1	Serial port port rate of 9600 (default)	
			1	0	0	The serial port port rate is 19200	
			1	0	1	The serial port port rate is 38400	
			1	1	0	The serial port port rate is 57600	
			1	1	1	The serial port port rate is 115200	
			4	3	Serial check bit		The communication two sides serial port mode can be different;
			0	0	8N1 (by default)		
			0	1	8O1		
			1	0	8E1		
			1	1	8N1 (equivalent to 00)		
			2	1	0	Wireless aerial rate (bps)	Both parties to communicate, the air rate, must be the same; The higher the air rate, the smaller the delay, and a shorter the transmission distance.
			0	0	0	The air rate is 2.4k	
			0	0	1	The air rate is 2.4k	
			0	1	0	The air rate is 2.4k	
			0	1	1	Aerial rate of 2.4k (default)	
			1	0	0	The air rate is 4.8k	
			1	0	1	The air rate is 9.6k	
			1	1	0	Aerial rate 15.6k	
			1	1	1	Aerial rate 15.6k	
04H	Read /	REG1	7	6	Subcontract setting		The data sent by the user is less

Copyright ©2012–2025，Chengdu Ebyte Electronic Technology Co.,Ltd.

	write		0	0	240 bytes (by default)	than the subcontract length, and the serial port output of the receiving end is presented as uninterrupted continuous output; If the data sent by the user is greater than the subcontract length, the serial port of the receiving end will subcontract the output.
			0	1	128 Bytes	
			1	0	64 Bytes	
			1	1	32 Bytes	
			5	The RSSI ambient noise is enabled		When enabled, instruction C0 C1 C2 C3 can read register in transmission mode or WOR transmission mode; Register 0x00: current ambient noise RSSI; Register 0X01: RSSI last received (The current channel noise is: dBm = -(256-RSSI)); Instruction format: C0 C1 C2 C3 + starting address + read length; Return: C1 + address + read length + read valid value; Like: send a C0 C1 C2 C3 00 01 Return to C1 00 01 RSSI (address only starts from 00)
			0	Disable (default)		
			1	start using		
			4	3	2 continue to have	
			1	0	transmitting power	Power and current are nonlinear relationship, when the maximum power, the power supply efficiency is the highest; The current does not decrease in equal proportion with the power decrease.
			0	0	33 dBm (by default)	
			0	1	30d B m	
			1	0	27d B m	
			1	1	24d B m	
05H	Read / write	REG2	Channel Control (CH) 0 - 64 represent a total of 65 channels, respectively			Actual frequency = 220.125 + CH * 0.25M
06H	Read / write	REG3	7	Enable the RSSI bytes		When enabled, the module receives wireless data and the output through the serial port TXD will follow an RSSI strength byte.
			0	Disable (default)		
			1	start using		
			6	transmission mode		During the fixed point transmission, the module will identify the three bytes of the serial port data as: address high + address low + channel, and take it as the wireless transmission target.
			0	Transparent transfer (by default)		
			1	Fixed-point transmission		
			5	Relay function		After the relay function is enabled, if the target address is not the
			0	Disable Relay function (default)		

Copyright ©2012–2025，Chengdu Ebyte Electronic Technology Co.,Ltd.

			1	Enable relay function			module itself, the module will start a forward; To prevent data return, it is recommended to work with fixed point mode; namely, target address and source address are different.
			4	LBT enable			After enabling, the wireless data will be monitored before transmission, which can avoid interference to a certain extent, but may bring data delay; The maximum residence time of LBT is 2 seconds, reaching two seconds.
			0	Disable (default)			
			1	start using			
			3	The WOR mode transceiver control			Only valid for mode 1; After the WOR receiver receives the wireless data and output it through the serial port, it will wait for 1000ms before entering the WOR again, during which the user can input the serial port data and return it wirelessly; Each serial port byte will refresh the 1000ms time; The user must initiate the first byte within 1000ms.
			0	WOR recipient (default) The module sends and receives an open code, and adds a wake-up code for a certain time when transmitting the data.			
			1	The WOR transmitter party The module cannot transmit data and works in WOR listening mode. Listening cycle see below (WOR cycle), which can save a lot of power consumption.			
			2	1	0	WOR period	Only valid for mode 1; Cycle T= (1 + WOR) * 500ms, maximum 4000ms, minimum 500ms; The longer the WOR monitoring interval period, the lower the average power consumption, but the greater the data delay; It must be consistent (very important)
			0	0	0	500ms	
			0	0	1	1000ms	
			0	1	0	1500ms	
			0	1	1	2000ms	
			1	0	0	2500ms	
			1	0	1	3000ms	
			1	1	0	3500ms	
			1	1	1	4000ms	
07H	write	CRYPT_H	Key High Bytes (default 0)				Write only, read back to 0; For encryption, to avoid the aerial wireless data intercepted by similar modules; These two bytes will be used as the calculation factor to encrypt the wireless signal in the air.
08H	write	CRYPT_L	Key Low Bytes (default 0)				
80H ~86H	a slight pause in reading	PID	Product information is 7 bytes				Product information is 7 bytes

Copyright ©2012–2025，Chengdu Ebyte Electronic Technology Co.,Ltd.

7.3 Factory default parameters

Model	Factory default parameter value: C0 00 09 00 00 00 62 00 28 03 00 00						
Module model	frequency	address	channel	Air rate	Baud rate	Serial port format	transmitting power
E22-230T30S	230.125MHz	0x0000	0x 28	2.4kbps	9600	8N1	33dbm

8: Use of the relay network mode

No	Relay mode description
1	After setting the relay mode through the configuration mode, switch to the general mode, and the relay starts working.
2	In relay mode, ADDH, ADDL is no longer the module address, but corresponding to NETID forwarding pairing, if one of the networks is received, it is forwarded to another network; The repeater's own network ID is invalid.
3	In relay mode, the relay module cannot send and receive data and cannot perform low-power operation.
4	The user enters another mode from mode 3 (sleep mode), or during the reset process, the module resets the user parameters, during which the AUX outputs a low level.

Description of the relay networking rules:

1、 Forward rules, the relay can forward data between two NETIDs.

2、In relay mode, ADDH \ ADDL is no longer used as a module address and serves as a NETID forwarding pairing.

as shown in the figure:

① Level 1 Relay

"Node 1" NETID is 08.

"Node 2" NETID is 33.

The ADDH \ ADDL for relay 1 was 08,33, respectively.

So the signal sent by node 1 (08) can be forwarded to node 2 (33)

At the same time, node 1 and node 2 have the same address, so the data sent by node 1 can be received by node 2.

② Secondary Relay

The ADDH \ ADDL for relay 2 was 33,05, respectively.

So the relay 2 can forward the data of the relay 1 to the network NETID: 05.

Thus, the nodes 3 and the node 4 can receive the node 1 data. Node 4 normally outputs data, and node 3 has different addresses from node 1, so it does not output data.

③ bi-directional relay

Copyright ©2012–2025，Chengdu Ebyte Electronic Technology Co.,Ltd.

As configured, data nodes 2 and 4 sent by nodes 1 may be received, and data sent by nodes 2 and 4 can also be received by nodes 1.

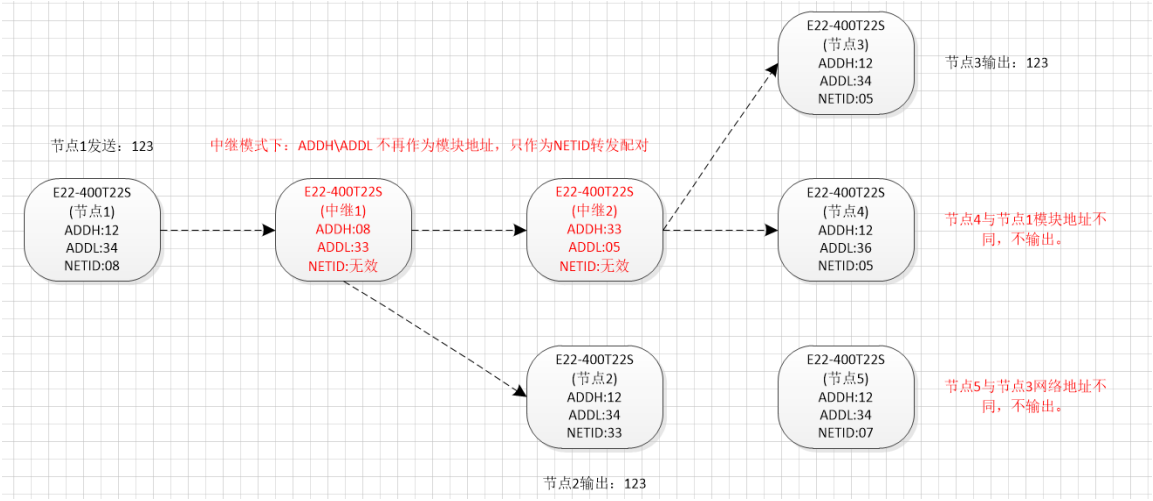

9 Configuration software description

- The following figure shows the display interface of E22-230T22S. Users can switch to command mode through M0 and M1, and quickly configure and read parameters in the upper computer.

- In the configuration computer, the module address, frequency channel, network ID and key are all decimal display mode; taking the values of each parameter:

  Network address: 0~65535

  Frequency channel: 0~64

  network ID:0~255

  Key: 0~65535

- When using the upper computer configuration relay mode, users need to pay special attention to, because in the upper computer, each parameter is decimal display mode, so the module address and network ID need to be filled in

through the conversion input system;

If the network ID input by the transmitter A is 02 and the network ID input by the receiver B is 10, then the relay R sets the module address, convert the hex value 0X020A into the decimal value 522 as the module address filled in by the relay R;

That is, the module address value of the relay terminal R that needs to be filled in is 522.

10: Hardware Design

- It is recommended to use DC voltage regulator power to supply the module, the power ripple coefficient is as small as possible, and the module should be reliably grounded;
- Please note the correct connection of the positive and negative poles of the power supply, if the reverse connection may cause permanent damage to the module;
- Please check the power supply to ensure that between the recommended supply voltage, exceeding the maximum value will cause permanent damage to the module;
- Please check the stability of the power supply, the voltage can not fluctuate substantially and frequently;
- When designing power supply circuit for modules, it is often recommended to retain more than 30% allowance, and the whole machine is conducive to long-term stable work;
- Modules should be as far as possible away from the power supply, transformer, high frequency wiring and other electromagnetic interference parts;
- High frequency digital routing, high frequency analog wiring, power wiring must avoid below the module, if really need to pass below the module, assuming that the module is welded in Top Layer, Top Layer in the contact part of the module paving copper (all paved copper and good grounding), must be close to the digital part of the module and line in Bottom Layer;
- Assuming that the module is welded or placed in Top Layer, it is also wrong to walk randomly in Bottom Layer or other layers, which will affect the stray and receiving sensitivity of the module to different degrees;
- Assuming that there are devices with large electromagnetic interference around the module will also greatly affect the performance of the module, according to the strength of the interference according to the module, if the situation allows to do appropriate isolation and shielding;
- Assuming that there is a wiring around the module with large electromagnetic interference (high frequency digital, high frequency simulation, power wiring) will also greatly affect the performance of the module, according to the strength of the interference is recommended to be appropriate away from the module, if the situation allows to do appropriate isolation and shielding;
- If the communication line uses a 5V level, the 1k-5.1k resistance must be connected in series (not recommended, there is still a risk of damage);
- Keep away from the 2.4GHz TTL protocol, such as USB3.0;
- The antenna installation structure has a great impact on the performance of the module, so make sure that the antenna is exposed and the best vertical upward;
- When the module is installed inside the casing, a high-quality antenna extension line can be used to extend the antenna to the outside of the casing;
- The antenna must not be installed inside the metal shell, which will greatly weaken the transmission distance.

Copyright ©2012–2025，Chengdu Ebyte Electronic Technology Co.,Ltd.

11 FAQ

11.1 Communication range is too short

- The communication distance will be affected when obstacle exists;
- Data lose rate will be affected by temperature, humidity and co-channel interference;
- The ground will absorb and reflect wireless radio wave, so the performance will be poor when testing near ground;
- Sea water has great ability in absorbing wireless radio wave, so performance will be poor when testing near the sea;
- The signal will be affected when the antenna is near metal object or put in a metal case;
- Power register was set incorrectly, air data rate is set as too high (the higher the air data rate, the shorter the distance);
- The power supply low voltage under room temperature is lower than 2.5V, the lower the voltage, the lower the transmitting power;
- Due to antenna quality or poor matching between antenna and module.

11.2 Module is easy to damage

- Please check the power supply source, ensure it is 2.0V~3.6V, voltage higher than 3.6V will damage the module;
- Please check the stability of power source, the voltage cannot fluctuate too much;
- Please make sure antistatic measure are taken when installing and using, high frequency devices have electrostatic susceptibility;
- Please ensure the humidity is within limited range, some parts are sensitive to humidity;
- Please avoid using modules under too high or too low temperature.

11.3 BER(Bit Error Rate) is high

- There are co-channel signal interference nearby, please be away from interference sources or modify frequency and channel to avoid interference;
- Poor power supply may cause messy code. Make sure that the power supply is reliable;
- The extension line and feeder quality are poor or too long, so the bit error rate is high.

Copyright ©2012–2025，Chengdu Ebyte Electronic Technology Co.,Ltd.

12 Production guidance

12.1 Reflow soldering temperature

Profile Feature	Curve characteristics	Sn-Pb Assembly	Pb-Free Assembly
Solder Paste	solder paste	Sn63/Pb37	Sn96.5/Ag3/Cu0.5
Preheat Temperature min （Tsmin）	Minimum preheating temperature	100℃	150℃
Preheat temperature max (Tsmax)	Maximum preheating temperature	150℃	200℃
Preheat Time (Tsmin to Tsmax)(ts)	preheating time	60-120 sec	60-120 sec
Average ramp-up rate(Tsmax to Tp)	Average rise rate	3℃/second max	3℃/second max
Liquidous Temperature (TL)	Fluid phase temperature	183℃	217℃
Time（tL）Maintained Above（TL）	Time above the liquid-phase line	60-90 sec	30-90 sec
Peak temperature（Tp）	Peak temperature	220-235℃	230-250℃
Aveage ramp-down rate（Tp to Tsmax）	Average decrease rate	6℃/second max	6℃/second max
Time 25℃ to peak temperature	25℃ to peak temperature	6 minutes max	8 minutes max

Copyright ©2012–2025，Chengdu Ebyte Electronic Technology Co.,Ltd.

12.2 Reflow soldering curve

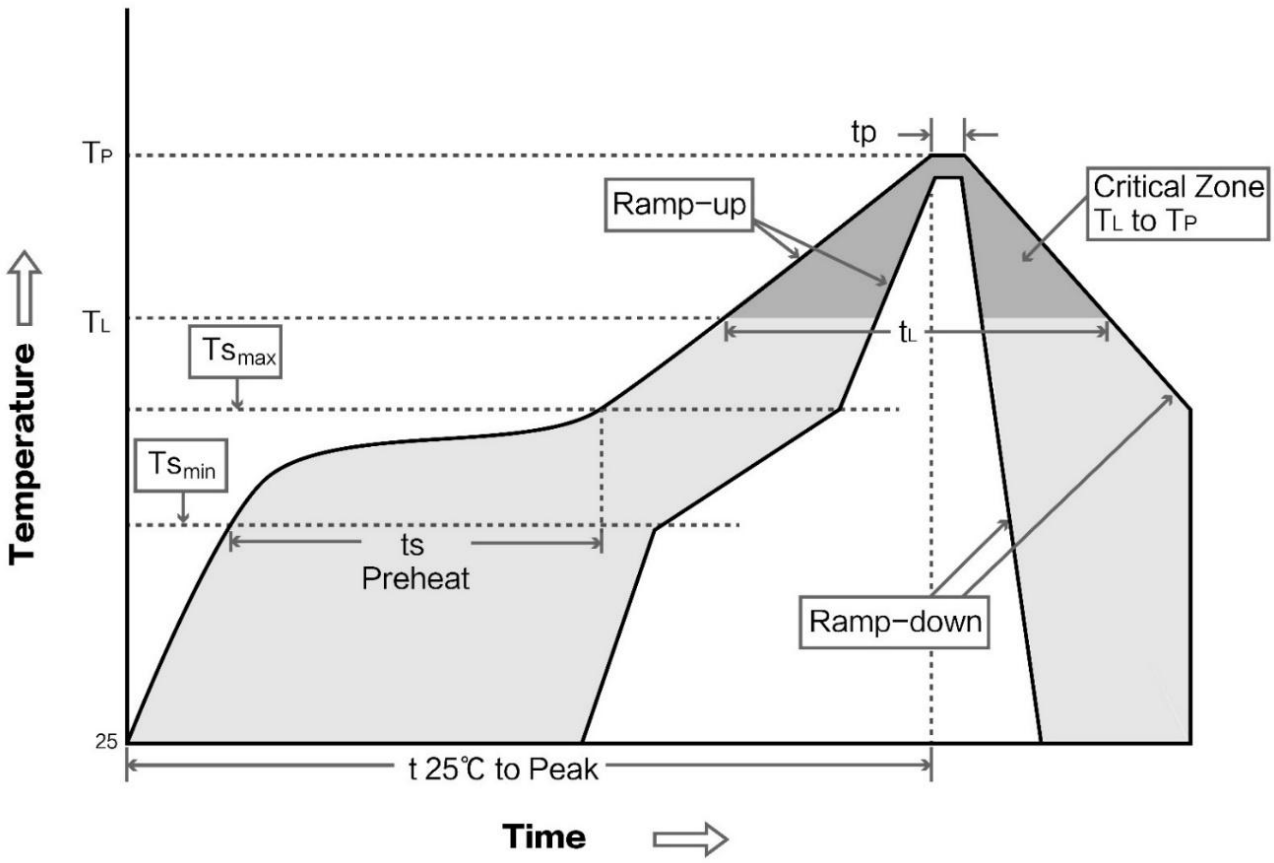

13 E22 series

Model No.	Frequency Hz	Tx power dBm	Distance km	**Packaging**	**Size mm**	**CI**
E22-230T22S	230M	22	5	paster	16*26	TTL
E22-230T30S	230M	30	10	paster	20*40.5	TTL
E22-400T22S	433/470M	22	5	paster	16*26	TTL
E22-400T30S	433/470M	30	10	paster	20*40.5	TTL
E22-900T22S	868/915M	22	5	paster	16*26	TTL
E22-900T30S	868/915M	30	10	paster	20*40.5	TTL
E22-400M22S	433/470M	22	7	paster	14*20	S PI
E22-400M30S	433/470M	30	12	paster	24*38.5	S PI
E22-900M22S	868/915M	22	7	paster	14*20	S PI
E22-900M30S	868/915M	30	12	paster	24*38.5	S PI

Copyright ©2012–2025，Chengdu Ebyte Electronic Technology Co.,Ltd.

14 Antenna recommendation

14.1 The Antenna is recommended

Antenna is an important role in the communication process, and often inferior antenna will have a great impact on the communication system, so our company recommends some antennas as antennas supporting our wireless modules with excellent performance and reasonable price.

Model No.	Type	Frequency Hz	Interface	Gain dBi	Length mm	Cable cm	Functional
TX230-JK-11	Rubber antenna	230M	SMA-J	2.5	110	-	Bendable adhesive rod, omnidirectional antenna
TX230-JK-20	Rubber antenna	230M	SMA-J	3.0	210	-	Bendable adhesive rod, omnidirectional antenna
TX230-XP-200	Suction antenna	230M	SMA-J	4.0	350	200	Neutral suction cup antenna, low loss
TX230-XPH-300	Suction antenna	230M	SMA-J	5.5	745	300	Large sucker antenna, with high gain

15 Mass Packaging Method

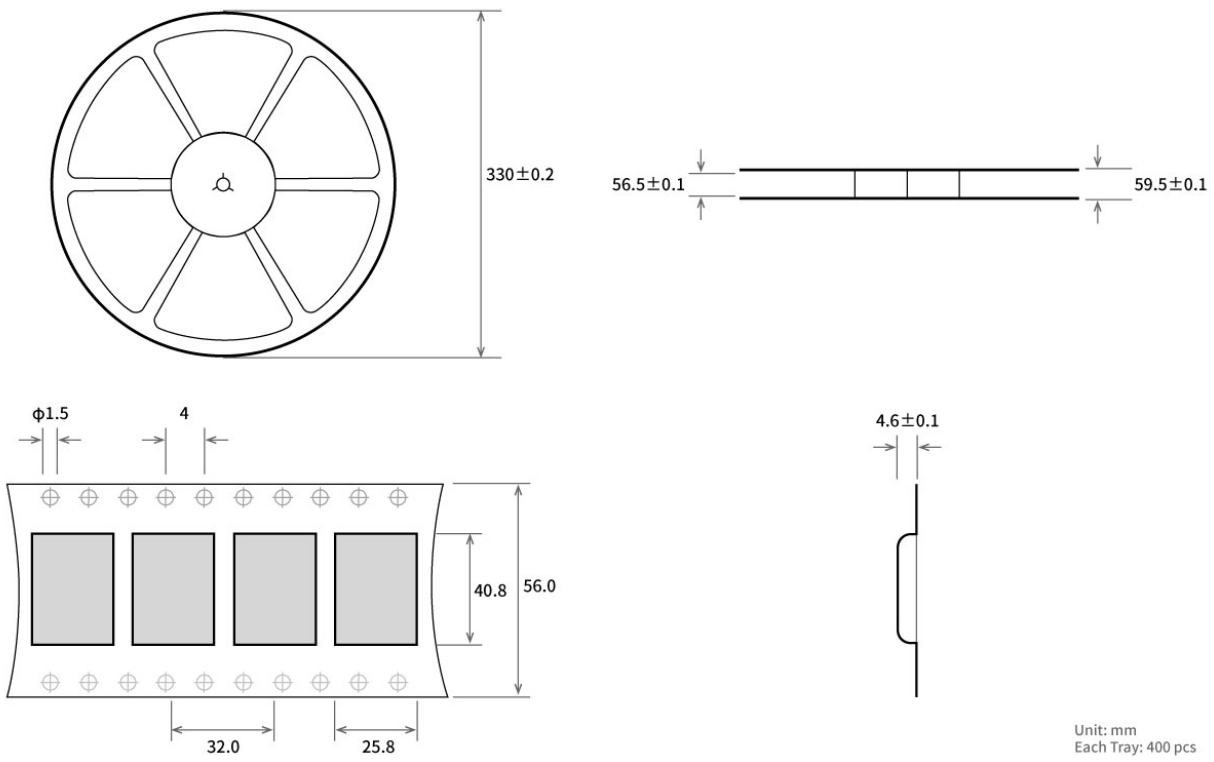

Revise the history

Version	Date	Description	Issued by
1.0	2022-10-17	The initial version	Yan
1.1	2023-7-17	Power correction	Hao
1.2	2024-4-16	Content correction	Hao
1.3	2025-2-24	Modified dimensional drawing	Hao

About us

Technical support: support@cdebyte.com
Documents and RF Setting download link: https://www.cdebyte.com
Thank you for using Ebyte products! Please contact us with any questions or suggestions: info@cdebyte.com
Address: B5 Mould Park, 199# Xiqu Ave, High-tech District, Sichuan, China

Chengdu Ebyte Electronic Technology Co.,Ltd.

Copyright ©2012–2025，Chengdu Ebyte Electronic Technology Co.,Ltd.