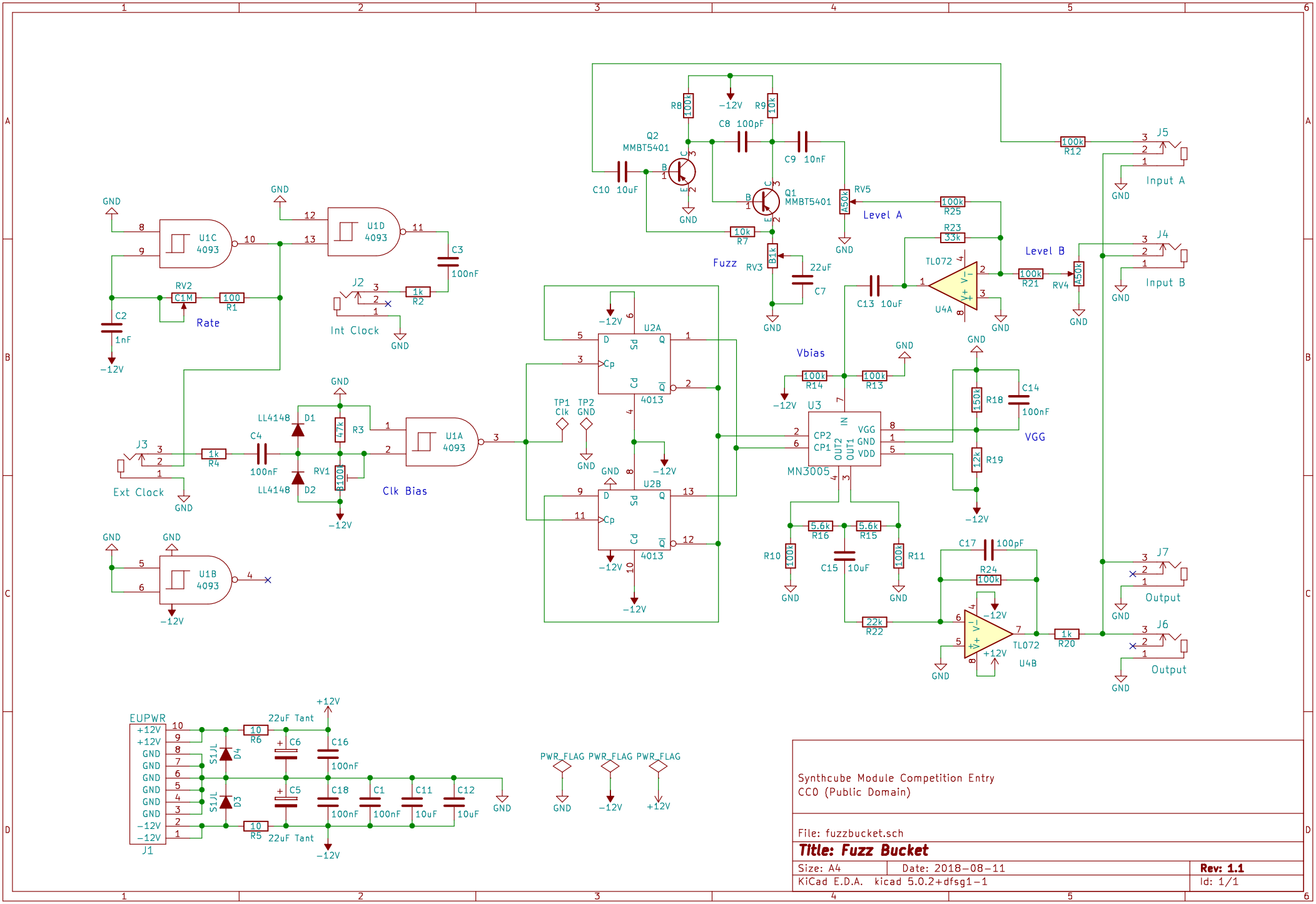

Synthcube Module Competition Entry
CC0 (Public Domain)

File: fuzzbucket.sch

Title: Fuzz Bucket

Size: A4	Date: 2018-08-11	Rev: 1.1
KiCad E.D.A. kicad 5.0.2+dfsg1-1		Id: 1/1