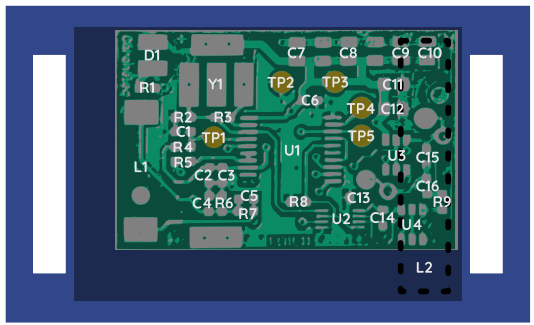
D1
C7
C8
C9
C10
R1
Y1
TP2
TP3
C11
C6
TP4
C12
R2
R3
C1
TP1
R4
TP5
R5
U1
U3
C15
L1
C2
C3
C16
C5
R9
C4
R6
R7
R8
C13
U2
C14
U4
L2

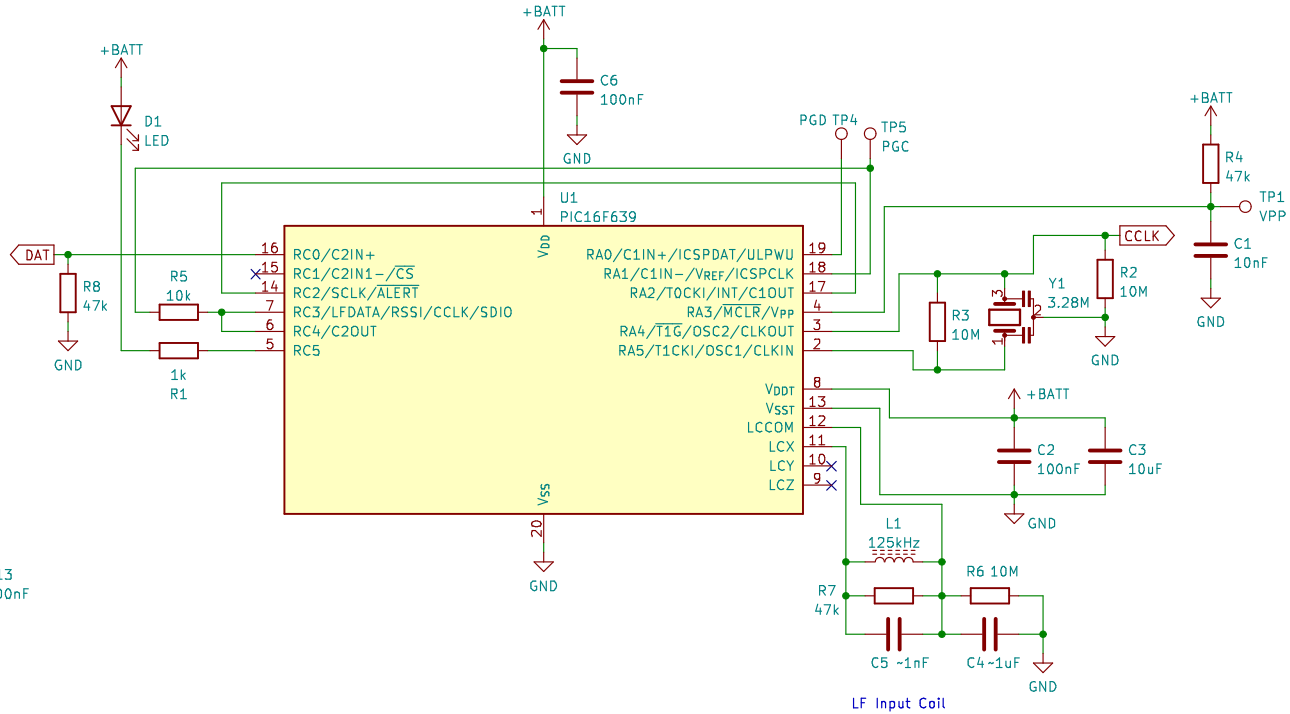
+BATT
D1
LED
C6
100nF
GND
PGD
TP4
TP5
PGC
U1
PIC16F639
DAT
R8
47k
R5
10k
1k
R1
RC0/C2IN+
RC1/C2IN1−/CS
RC2/SCLK/ALERT
RC3/LFDATA/RSSI/CCLK/SDIO
RC4/C2OUT
RC5
VDD
VSS
RA0/C1IN+/ICSPDAT/ULPWU
RA1/C1IN−/VREF/ICSPCLK
RA2/T0CKI/INT/C1OUT
RA3/MCLR/VPP
RA4/T1G/OSC2/CLKOUT
RA5/T1CKI/OSC1/CLKIN
VDDT
VSST
LCCOM
LCX
LCY
LCZ
R4
47k
TP1
VPP
C1
10nF
CCLK
R2
10M
Y1
3.28M
R3
10M
C2
100nF
C3
10uF
L1
125kHz
R7
47k
R6 10M
C5 ~1nF
C4 ~1uF
LF Input Coil

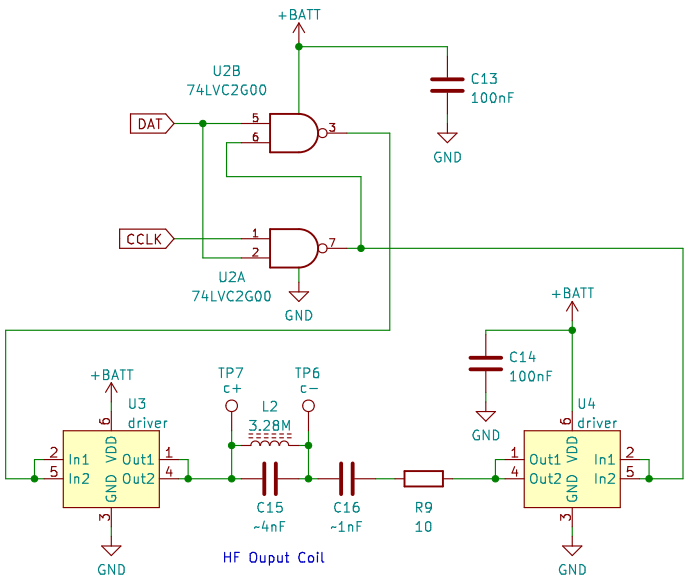
+BATT
U2B
74LVC2G00
C13
100nF
GND
DAT
CCLK
U2A
74LVC2G00
C14
100nF
U3
driver
U4
driver
TP7
c+
TP6
c−
L2
3.28M
In1
In2
Out1
Out2
VDD
C15
~4nF
C16
~1nF
R9
10
HF Ouput Coil

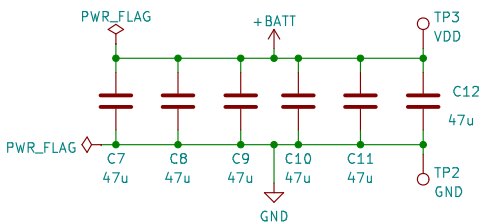
PWR_FLAG
+BATT
TP3
VDD
C12
47u
C7
47u
C8
47u
C9
47u
C10
47u
C11
47u
TP2
GND